Dist	COUNTY	ROUTE	POST MILES TOTAL PROJECT	SHEET No.	TOTAL SHEETS
07	LA	5,10,14 47,60, etc.	Var	1	72

ACSTP-X037(162)E

STATE OF CALIFORNIA
DEPARTMENT OF TRANSPORTATION

PROJECT PLANS FOR CONSTRUCTION ON
STATE HIGHWAY
IN LOS ANGELES COUNTY AT VARIOUS LOCATIONS

TO BE SUPPLEMENTED BY STANDARD PLANS DATED MAY 2006

INDEX OF PLANS

SHEET No.	DESCRIPTION
1	TITLE AND LOCATION MAP
2-19	LAYOUTS
20-30	CONSTRUCTION DETAILS
31-32	UTILITY PLANS
33-41	CONSTRUCTION AREA SIGNS
42-45	TRAFFIC HANDLING PLANS
46	SUMMARY OF QUANTITIES
47-51	HIGHWAY PLANTING
52-72	REVISED AND NEW STANDARD PLANS

THE STANDARD PLANS LIST APPLICABLE TO THIS CONTRACT IS INCLUDED IN THE NOTICE TO BIDDERS AND SPECIAL PROVISIONS BOOK.

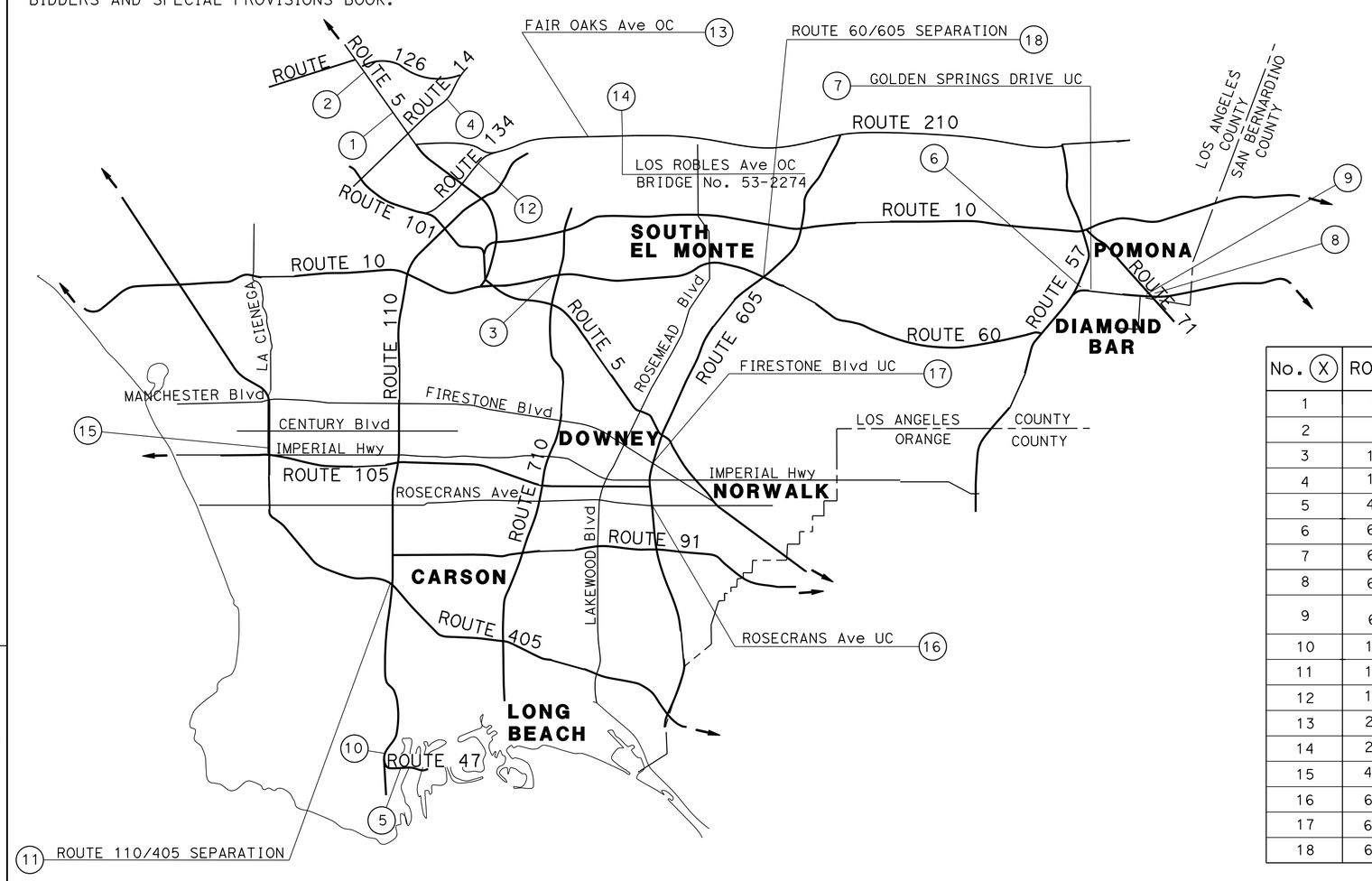

LOCATIONS OF CONSTRUCTION

No. (X)	ROUTE	POST MILE	DESCRIPTION
1	5	53.60	ON ROUTE 5 AT MAGIC MOUNTAIN PARKWAY OFF-RAMPS
2	5	56.30	ON ROUTE 5 AT ROUTE 126 SEPARATION
3	10	21.40	ON WB 10 AT EASTERN Ave OFF-RAMP
4	14	33.40	ON SB ROUTE 14 AT SAND CANYON ROAD ON-RAMP
5	47	0.30	ON SB ROUTE 47 AT HARBOR Blvd OFF-RAMP
6	60	25.60	PARK & RIDE AREA BETWEEN NB ROUTE 57 AND WB ROUTE 60
7	60	26.53	ON ROUTE 60 AT GOLDEN SPRINGS DRIVE
8	60	29.20	ON WB ROUTE 60 AT GAREY Ave OFF-RAMP
9	60	30.40	BETWEEN THE WB ROUTE 60 ON-RAMP AND CONNECTOR RAMP TO EB ROUTE 71 AT GAREY Ave
10	110	0.30	ON SB ROUTE 110 AT MacARTHUR Ave OC
11	110	8.80	ON ROUTE 110 AT ROUTE 405 SEPARATION
12	134	12.60	ON EB ROUTE 134 AT ARROYO SECO SEPARATION
13	210	R25.29	ON ROUTE 210 AT FAIR OAKS Ave OC
14	210	R25.81	ON EB ROUTE 210 AT LOS ROBLES Ave OC
15	405	21.40	ON SB ROUTE 405 AT LA CIENEGA Blvd UC
16	605	6.80	ON ROUTE 605 AT ROSECRANS Ave UC
17	605	R8.40	ON ROUTE 605 AT FIRESTONE Blvd UC
18	605	17.40	ON ROUTE 60/605 SEPARATION

PROJECT MANAGER: OJAS SHETH

DESIGN ENGINEER: REFUGIO DOMINGUEZ

Refugio Dominguez 8/30/12
PROJECT ENGINEER DATE
REGISTERED CIVIL ENGINEER

REGISTERED PROFESSIONAL ENGINEER REFUGIO DOMINGUEZ No. 50820 Exp. 9/30/13 CIVIL STATE OF CALIFORNIA

October 22, 2012
PLANS APPROVAL DATE

THE STATE OF CALIFORNIA OR ITS OFFICERS OR AGENTS SHALL NOT BE RESPONSIBLE FOR THE ACCURACY OR COMPLETENESS OF SCANNED COPIES OF THIS PLAN SHEET.

THE CONTRACTOR SHALL POSSESS THE CLASS (OR CLASSES) OF LICENSE AS SPECIFIED IN THE "NOTICE TO BIDDERS."

NO SCALE

CONTRACT No.	07-258804
PROJECT ID	0700020195

LAST REVISION 00-00-00 | DATE PLOTTED => 02-JAN-2013 | TIME PLOTTED => 19:22

Dist	COUNTY	ROUTE	POST MILES TOTAL PROJECT	SHEET No.	TOTAL SHEETS
07	LA	5,10,14, 47,60,etc.	Var	2	72

REGISTERED CIVIL ENGINEER 8/30/12 DATE

10-22-12
PLANS APPROVAL DATE

REGISTERED PROFESSIONAL ENGINEER REFUGIO DOMINGUEZ No. 50820 Exp. 9/30/13 CIVIL STATE OF CALIFORNIA

THE STATE OF CALIFORNIA OR ITS OFFICERS OR AGENTS SHALL NOT BE RESPONSIBLE FOR THE ACCURACY OR COMPLETENESS OF SCANNED COPIES OF THIS PLAN SHEET.

NOTES:

1. FOR ACCURATE RIGHT OF WAY DATA, CONTACT RIGHT OF WAY ENGINEERING AT THE DISTRICT OFFICE.
2. EXISTING UTILITY FACILITIES HAVE NOT BEEN PLOTTED ON THESE PLANS.

LEGEND:

- SLOPE PAVING (CONCRETE)
- 4" SHOTCRETE
- MAINTENANCE VEHICLE PULLOUT
- MULCH
- ROCK BLANKET
- DIRECTION OF TRAFFIC
- WWM WELDED WIRE MESH
- EROSION CONTROL (HYDROSEED)

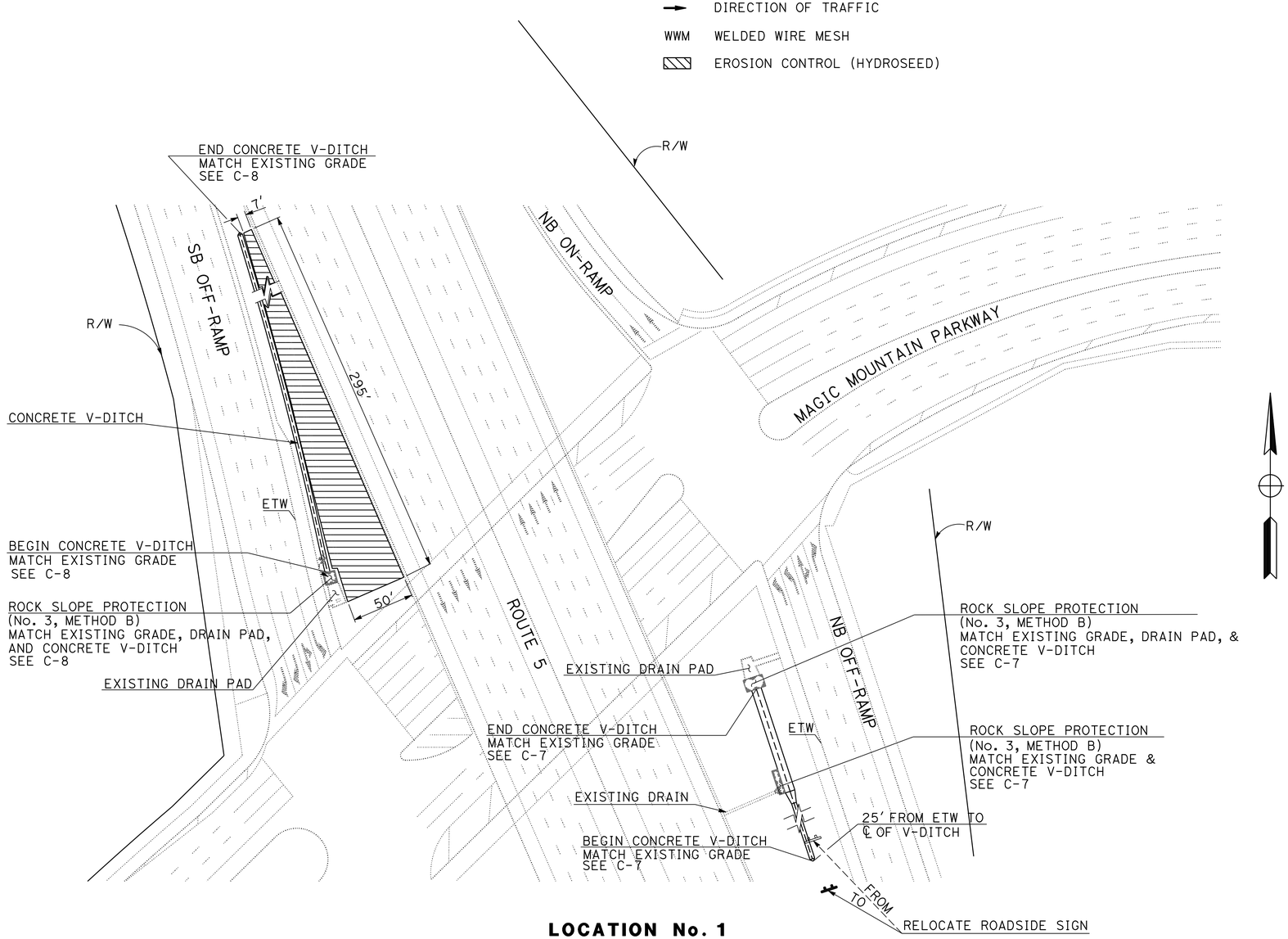

LOCATION No. 1

ON ROUTE 5 AT MAGIC MOUNTAIN PARKWAY OFF-RAMPS
PM 53.60

LAYOUT
SCALE: 1" = 50'

L-1

STATE OF CALIFORNIA - DEPARTMENT OF TRANSPORTATION
Caltrans® OFFICE OF DESIGN D

FUNCTIONAL SUPERVISOR: KAREN FONG
CALCULATED-DESIGNED BY: MOHAMMAD MOHSENZADEH
CHECKED BY: REFUGIO DOMINGUEZ
REVISED BY
DATE REVISED

LAST REVISION 00-00-00
DATE PLOTTED => 02-JAN-2013
TIME PLOTTED => 19:22

Dist	COUNTY	ROUTE	POST MILES TOTAL PROJECT	SHEET No.	TOTAL SHEETS
07	LA	5,10,14, 47,60,etc.	Var	3	72

REGISTERED CIVIL ENGINEER 8/30/12 DATE

10-22-12
PLANS APPROVAL DATE

REGISTERED PROFESSIONAL ENGINEER REFUGIO DOMINGUEZ No. 50820 Exp. 9/30/13 CIVIL STATE OF CALIFORNIA

THE STATE OF CALIFORNIA OR ITS OFFICERS OR AGENTS SHALL NOT BE RESPONSIBLE FOR THE ACCURACY OR COMPLETENESS OF SCANNED COPIES OF THIS PLAN SHEET.

NOTES:

1. FOR ACCURATE RIGHT OF WAY DATA, CONTACT RIGHT OF WAY ENGINEERING AT THE DISTRICT OFFICE.
2. EXISTING UTILITY FACILITIES HAVE NOT BEEN PLOTTED ON THESE PLANS.

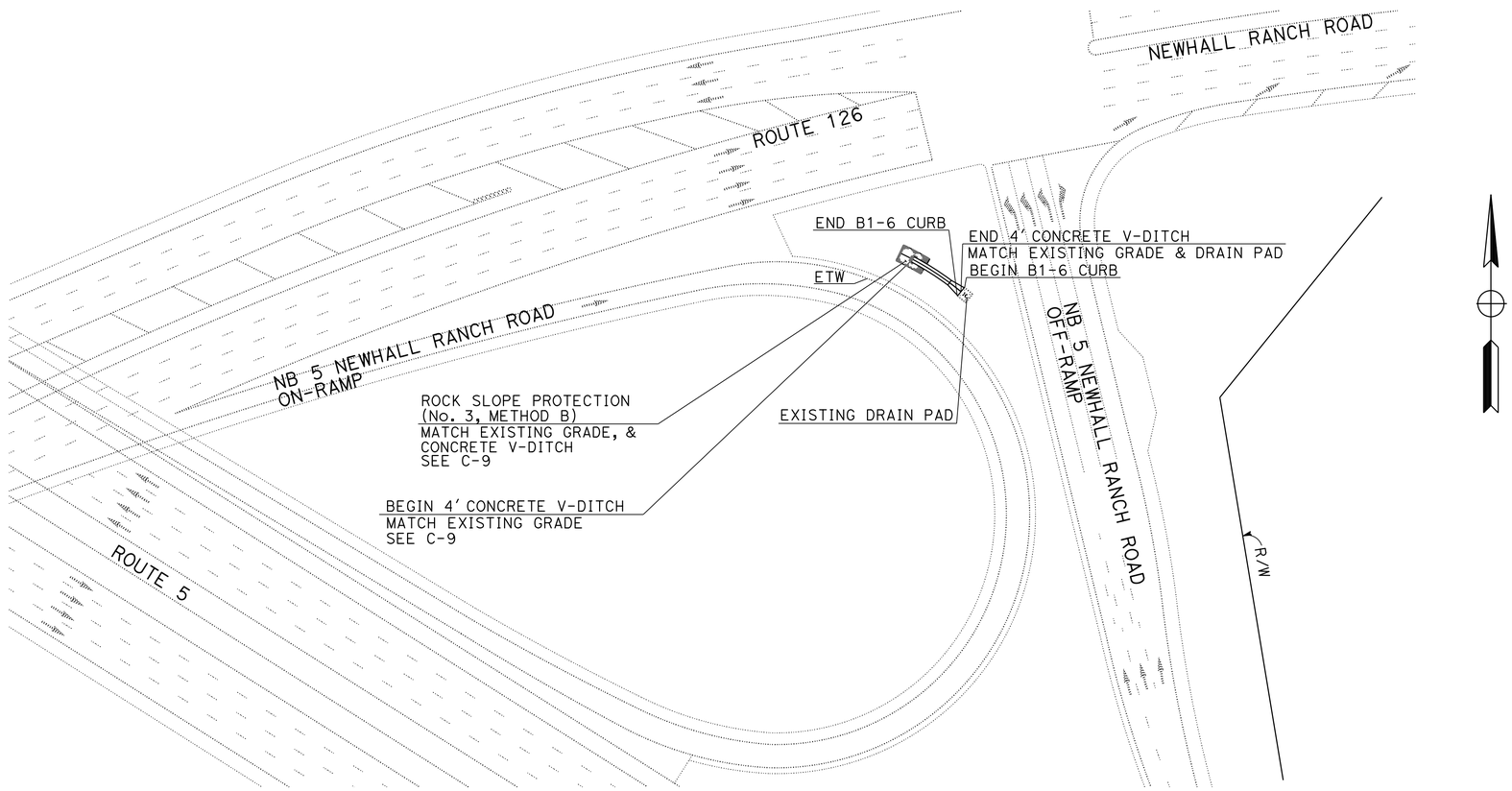

LOCATION No. 2

ON ROUTE 5 AT ROUTE 126 SEPARATION
PM 56.30

LAYOUT
SCALE: 1" = 50'

L-2

STATE OF CALIFORNIA - DEPARTMENT OF TRANSPORTATION
Caltrans® **OFFICE OF DESIGN D**

FUNCTIONAL SUPERVISOR: KAREN FONG
CALCULATED-DESIGNED BY: MOHAMMAD MOHSENZADEH
CHECKED BY: REFUGIO DOMINGUEZ
REVISED BY
DATE REVISED

LAST REVISION 00-00-00
DATE PLOTTED => 02-JAN-2013
TIME PLOTTED => 19:22

Dist	COUNTY	ROUTE	POST MILES TOTAL PROJECT	SHEET No.	TOTAL SHEETS
07	LA	5,10,14, 47,60,etc.	Var	4	72

REGISTERED CIVIL ENGINEER 8/30/12 DATE

10-22-12
PLANS APPROVAL DATE

REGISTERED PROFESSIONAL ENGINEER REFUGIO DOMINGUEZ No. 50820 Exp. 9/30/13 CIVIL STATE OF CALIFORNIA

THE STATE OF CALIFORNIA OR ITS OFFICERS OR AGENTS SHALL NOT BE RESPONSIBLE FOR THE ACCURACY OR COMPLETENESS OF SCANNED COPIES OF THIS PLAN SHEET.

NOTES:

1. RIGHT OF WAY LIMITS ARE INDETERMINATE AND ARE NOT SHOWN. THE CONTRACTOR MUST CONTACT RIGHT OF WAY ENGINEERING AT THE DISTRICT OFFICE FOR CONDITIONS OF USE PRIOR TO COMMENCING WORK.
2. EXISTING UTILITY FACILITIES HAVE NOT BEEN PLOTTED ON THESE PLANS.

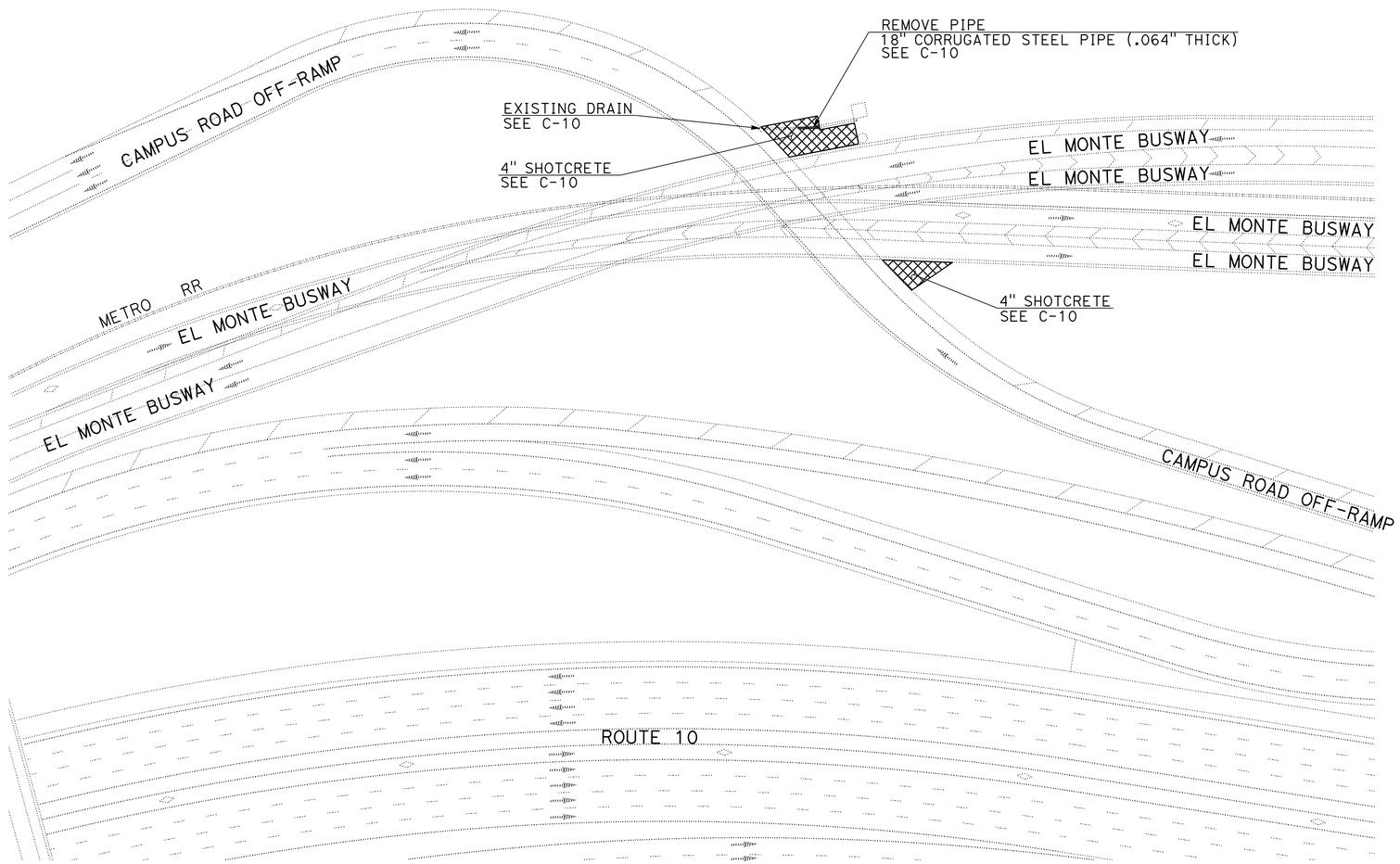

LOCATION No. 3

ON WB 10 AT EASTERN Ave OFF-RAMP
PM 21.40

LAYOUT
SCALE: 1" = 50'

L-3

REVISED BY	DATE REVISED

CALCULATED-DESIGNED BY	CHECKED BY
MOHAMMAD MOHSENZADEH	REFUGIO DOMINGUEZ

FUNCTIONAL SUPERVISOR
KAREN FONG

STATE OF CALIFORNIA - DEPARTMENT OF TRANSPORTATION
Caltrans® OFFICE OF DESIGN D

LAST REVISION 00-00-00
DATE PLOTTED => 02-JAN-2013
TIME PLOTTED => 19:22

Dist	COUNTY	ROUTE	POST MILES TOTAL PROJECT	SHEET No.	TOTAL SHEETS
07	LA	5,10,14, 47,60,etc.	Var	5	72

REGISTERED CIVIL ENGINEER 8/30/12 DATE

10-22-12
PLANS APPROVAL DATE

REGISTERED PROFESSIONAL ENGINEER REFUGIO DOMINGUEZ No. 50820 Exp. 9/30/13 CIVIL STATE OF CALIFORNIA

THE STATE OF CALIFORNIA OR ITS OFFICERS OR AGENTS SHALL NOT BE RESPONSIBLE FOR THE ACCURACY OR COMPLETENESS OF SCANNED COPIES OF THIS PLAN SHEET.

NOTES:

1. FOR ACCURATE RIGHT OF WAY DATA, CONTACT RIGHT OF WAY ENGINEERING AT THE DISTRICT OFFICE.
2. EXISTING UTILITY FACILITIES HAVE NOT BEEN PLOTTED ON THESE PLANS.
3. NAILS MAY BE SPLAYED TO AVOID UNDERGROUND OBSTRUCTIONS. MAINTAIN A MINIMUM 3′ CLEARANCE BETWEEN NAIL TIPS.

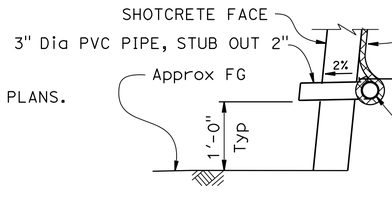

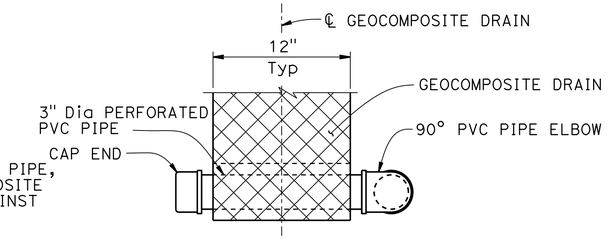

DRAINAGE DETAILS
NO SCALE

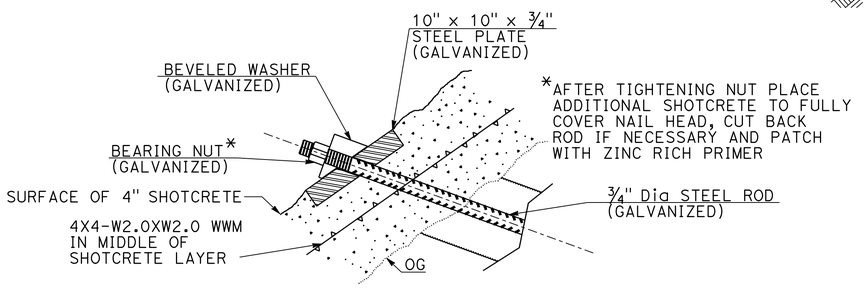

DETAIL 1
NO SCALE

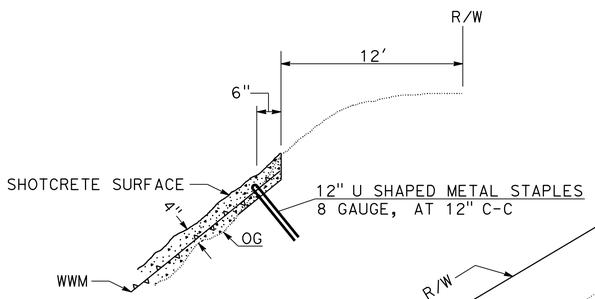

DETAIL 2
NO SCALE

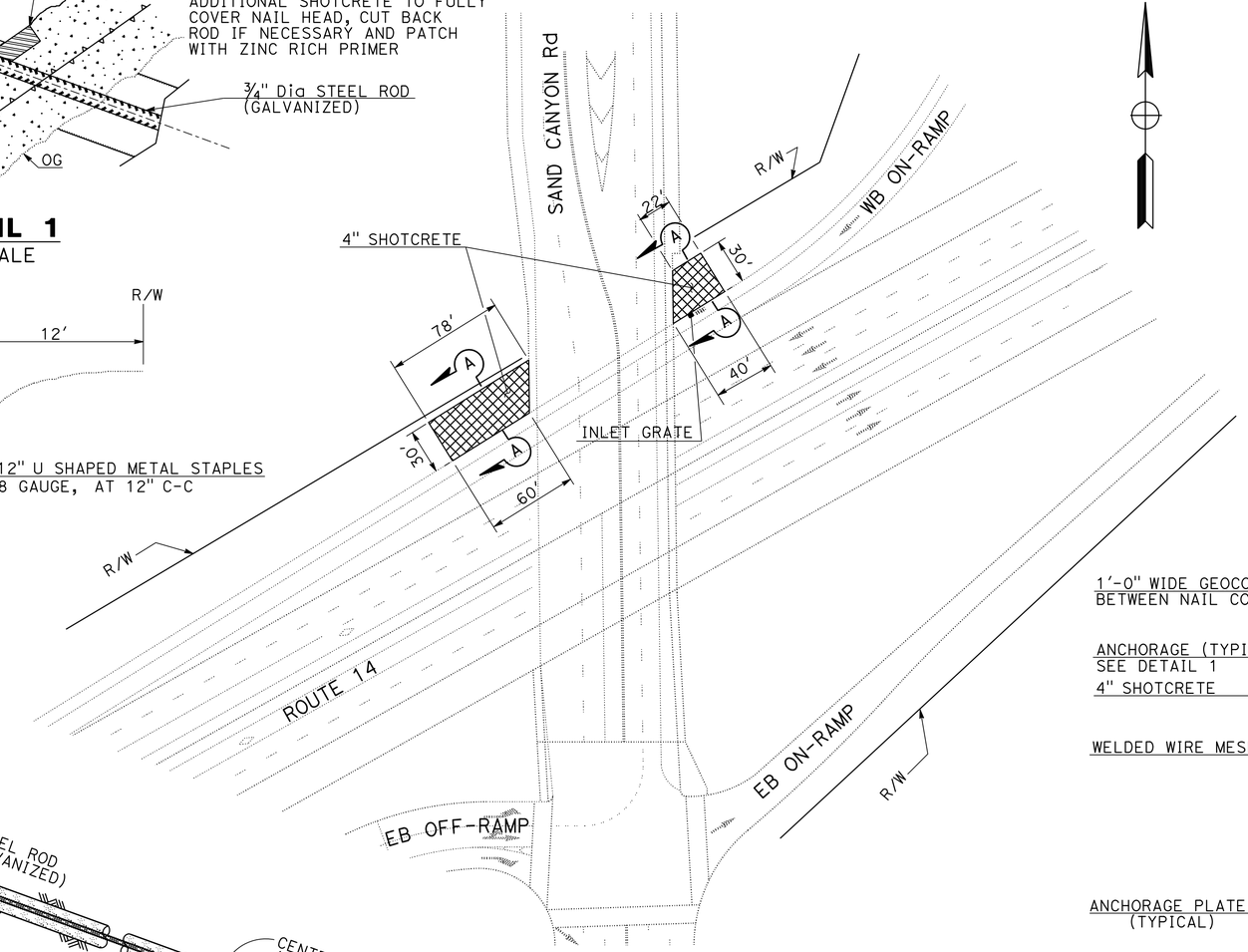

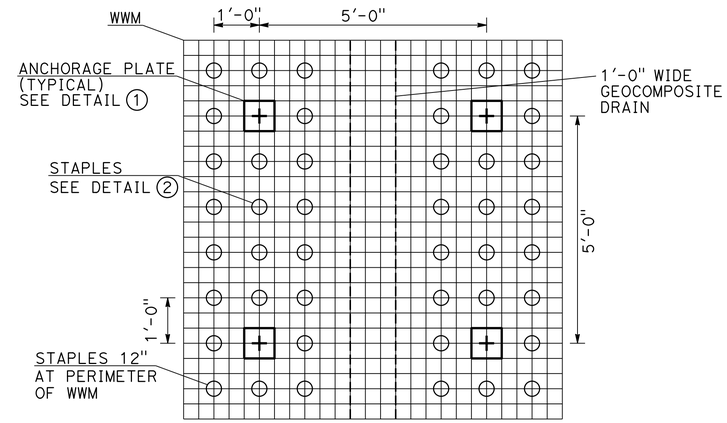

TYPICAL STAPLE, NAIL, AND DRAINAGE LAYOUT
NO SCALE

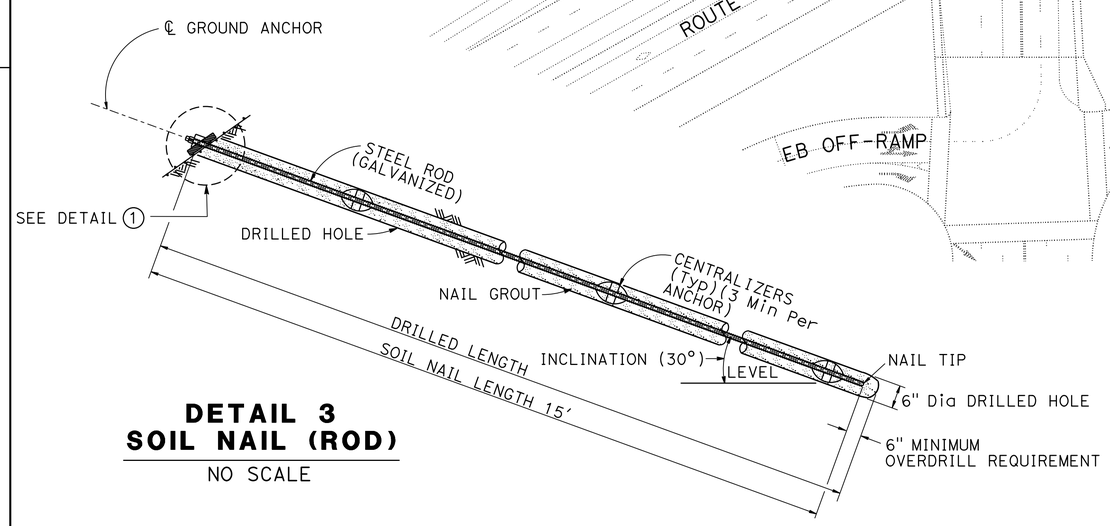

DETAIL 3
SOIL NAIL (ROD)
NO SCALE

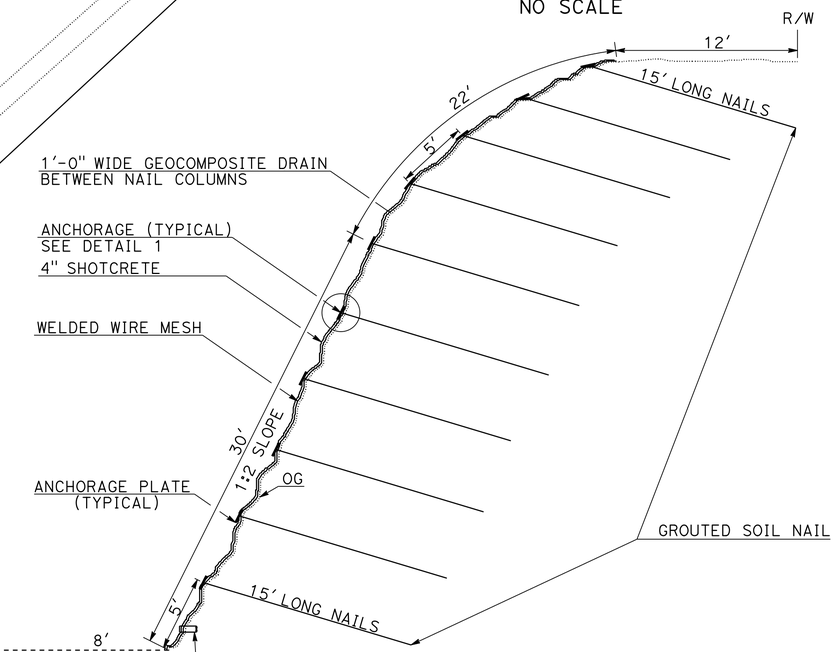

SECTION A-A
NO SCALE

LOCATION No. 4
ON SB ROUTE 14 AT SAND CANYON ROAD ON-RAMP
PM 33.40

LAYOUT
SCALE: 1" = 50′

L-4

REVISED BY | DATE REVISED
MOHAMMAD MOHSENZADEH | REFUGIO DOMINGUEZ
CALCULATED-DESIGNED BY | CHECKED BY
FUNCTIONAL SUPERVISOR | KAREN FONG

STATE OF CALIFORNIA - DEPARTMENT OF TRANSPORTATION
Caltrans® OFFICE OF DESIGN D

LAST REVISION 00-00-00 | DATE PLOTTED => 02-JAN-2013 | TIME PLOTTED => 19:22

BORDER LAST REVISED 7/2/2010 | USERNAME => s125624 | DGN FILE => 725880ea004.dgn | RELATIVE BORDER SCALE IS IN INCHES 0 1 2 3 | UNIT 1819 | PROJECT NUMBER & PHASE 07000201951

Dist	COUNTY	ROUTE	POST MILES TOTAL PROJECT	SHEET No.	TOTAL SHEETS
07	LA	5,10,14, 47,60,etc.	Var	6	72

REGISTERED CIVIL ENGINEER 8/30/12 DATE

10-22-12
PLANS APPROVAL DATE

REGISTERED PROFESSIONAL ENGINEER REFUGIO DOMINGUEZ No. 50820 Exp. 9/30/13 CIVIL STATE OF CALIFORNIA

THE STATE OF CALIFORNIA OR ITS OFFICERS OR AGENTS SHALL NOT BE RESPONSIBLE FOR THE ACCURACY OR COMPLETENESS OF SCANNED COPIES OF THIS PLAN SHEET.

NOTES:

1. FOR ACCURATE RIGHT OF WAY DATA, CONTACT RIGHT OF WAY ENGINEERING AT THE DISTRICT OFFICE.
2. EXISTING UTILITY FACILITIES HAVE NOT BEEN PLOTTED ON THESE PLANS.

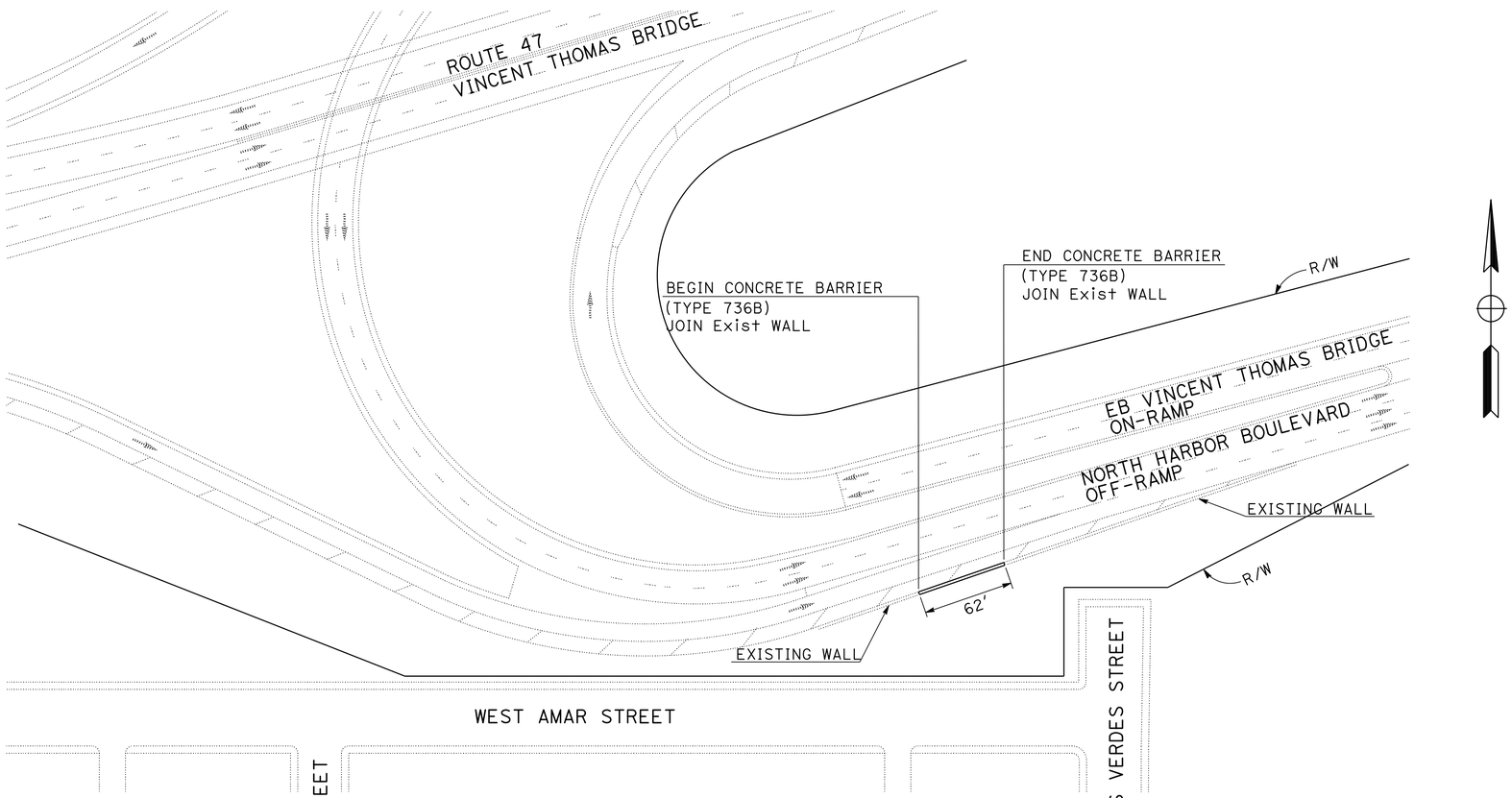

LOCATION No. 5

ON SB ROUTE 47 AT HARBOR Blvd OFF-RAMP
PM 0.30

LAYOUT
SCALE: 1" = 50'

L-5

STATE OF CALIFORNIA - DEPARTMENT OF TRANSPORTATION
Caltrans® OFFICE OF DESIGN D

FUNCTIONAL SUPERVISOR: KAREN FONG
CALCULATED-DESIGNED BY: MOHAMMAD MOHSENZADEH
CHECKED BY: REFUGIO DOMINGUEZ
REVISED BY
DATE REVISED

LAST REVISION 00-00-00
DATE PLOTTED => 02-JAN-2013
TIME PLOTTED => 19:22

Dist	COUNTY	ROUTE	POST MILES TOTAL PROJECT	SHEET No.	TOTAL SHEETS
07	LA	5,10,14, 47,60,etc.	Var	7	72

REGISTERED CIVIL ENGINEER 8/30/12 DATE

10-22-12
PLANS APPROVAL DATE

REGISTERED PROFESSIONAL ENGINEER REFUGIO DOMINGUEZ No. 50820 Exp. 9/30/13 CIVIL STATE OF CALIFORNIA

THE STATE OF CALIFORNIA OR ITS OFFICERS OR AGENTS SHALL NOT BE RESPONSIBLE FOR THE ACCURACY OR COMPLETENESS OF SCANNED COPIES OF THIS PLAN SHEET.

NOTES:

1. RIGHT OF WAY LIMITS ARE INDETERMINATE AND ARE NOT SHOWN. THE CONTRACTOR MUST CONTACT RIGHT OF WAY ENGINEERING AT THE DISTRICT OFFICE FOR CONDITIONS OF USE PRIOR TO COMMENCING WORK.
2. EXISTING UTILITY FACILITIES HAVE NOT BEEN PLOTTED ON THESE PLANS.

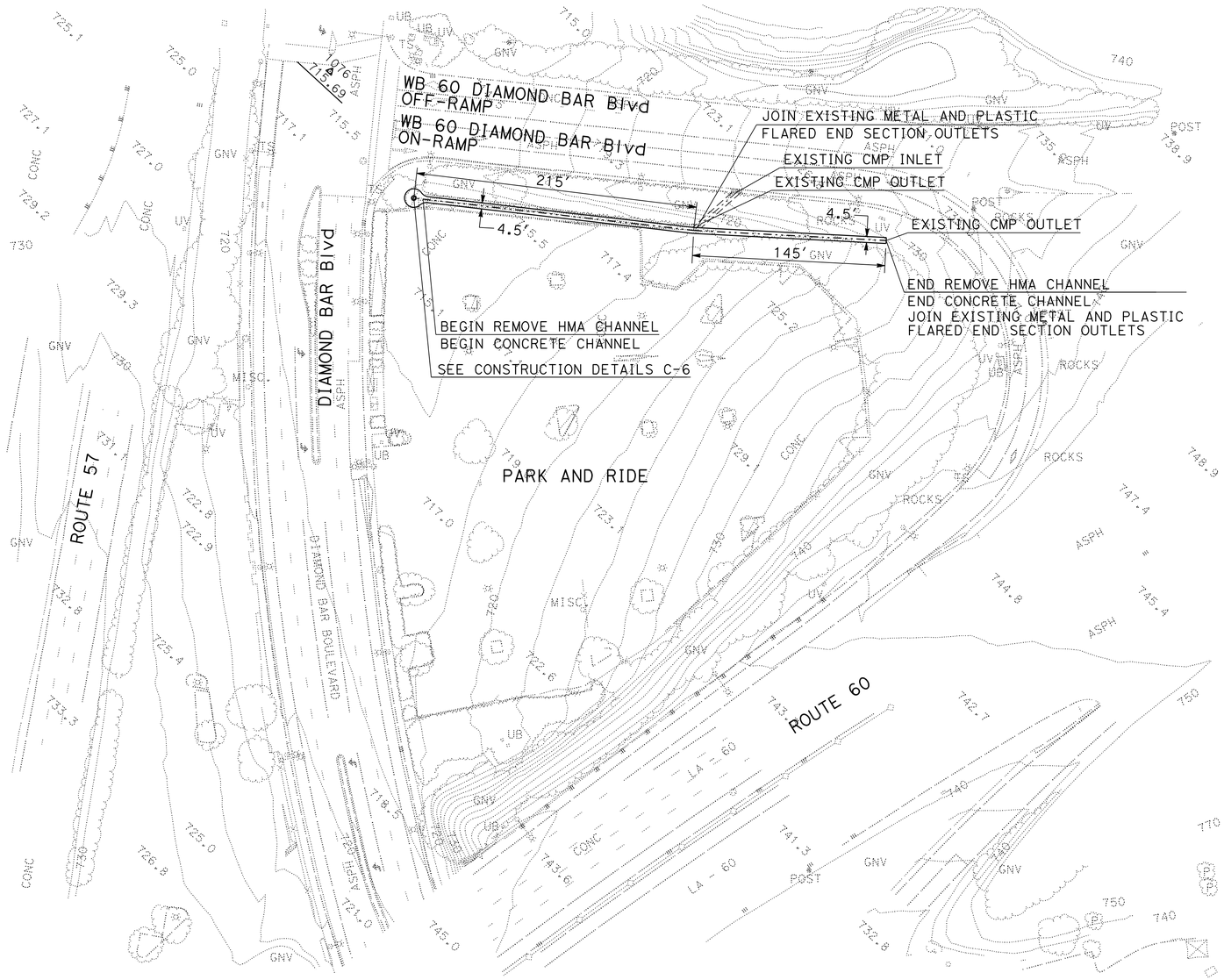

LOCATION No. 6

PARK & RIDE AREA BETWEEN NB ROUTE 57 AND WB ROUTE 60
PM 25.60

LAYOUT
SCALE: 1" = 50'

L-6

STATE OF CALIFORNIA - DEPARTMENT OF TRANSPORTATION
Caltrans® OFFICE OF DESIGN D

FUNCTIONAL SUPERVISOR: KAREN FONG
CALCULATED-DESIGNED BY: MOHAMMAD MOHSENZADEH
CHECKED BY: REFUGIO DOMINGUEZ
REVISED BY
DATE REVISED

LAST REVISION 00-00-00
DATE PLOTTED => 02-JAN-2013
TIME PLOTTED => 19:22

Dist	COUNTY	ROUTE	POST MILES TOTAL PROJECT	SHEET No.	TOTAL SHEETS
07	LA	5,10,14, 47,60,etc.	Var	8	72

REGISTERED CIVIL ENGINEER 8/30/12 DATE

10-22-12
PLANS APPROVAL DATE

REGISTERED PROFESSIONAL ENGINEER REFUGIO DOMINGUEZ No. 50820 Exp. 9/30/13 CIVIL STATE OF CALIFORNIA

THE STATE OF CALIFORNIA OR ITS OFFICERS OR AGENTS SHALL NOT BE RESPONSIBLE FOR THE ACCURACY OR COMPLETENESS OF SCANNED COPIES OF THIS PLAN SHEET.

NOTES:

1. FOR ACCURATE RIGHT OF WAY DATA, CONTACT RIGHT OF WAY ENGINEERING AT THE DISTRICT OFFICE.
2. EXISTING UTILITY FACILITIES HAVE NOT BEEN PLOTTED ON THESE PLANS.

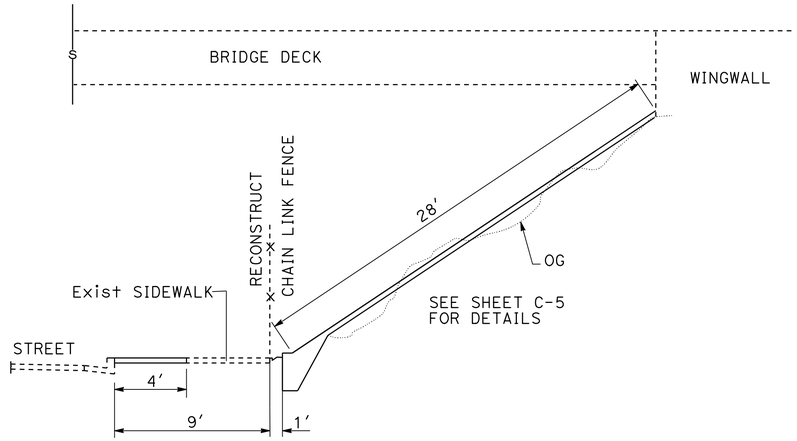

SECTION A-A
NO SCALE

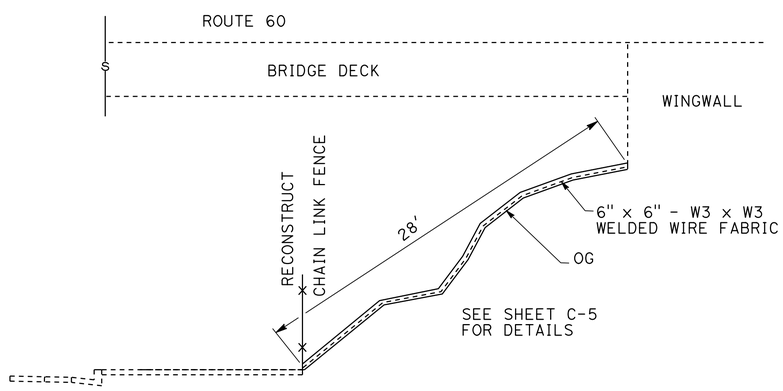

SECTION B-B
NO SCALE

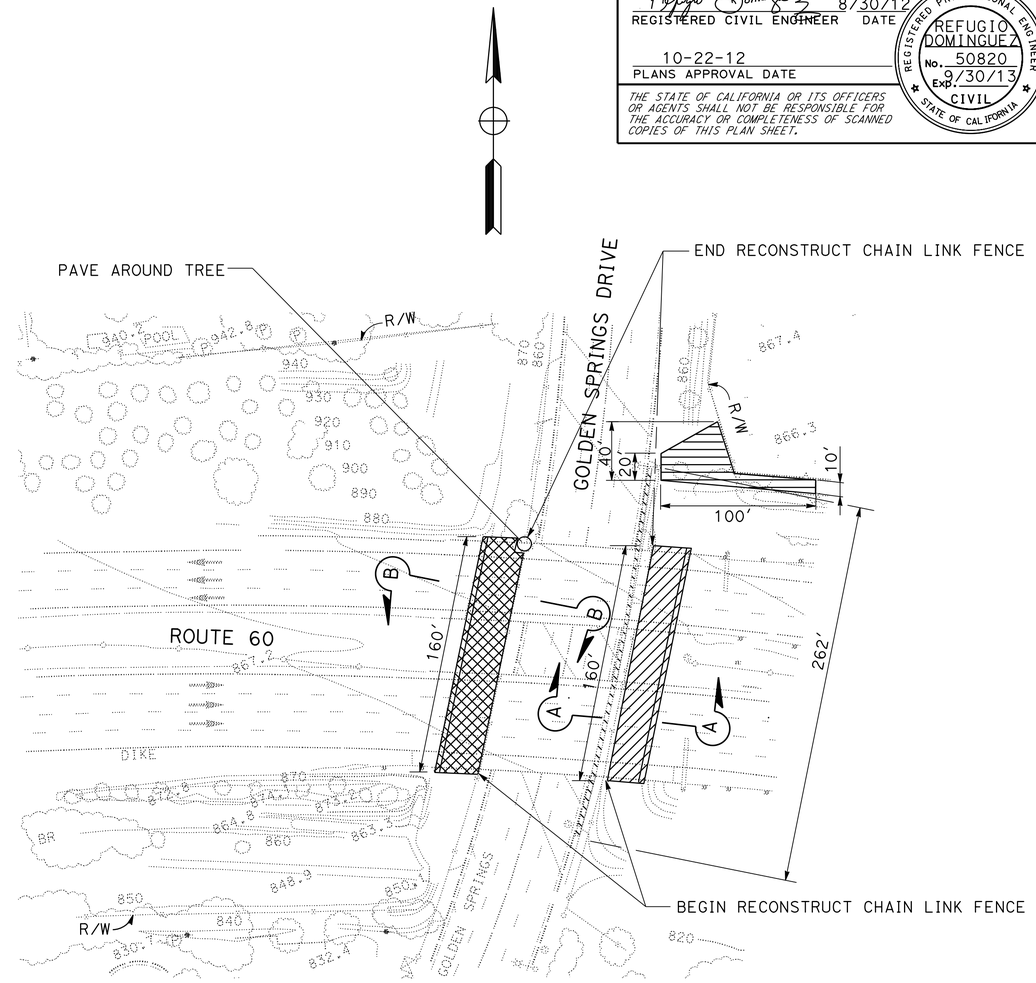

LOCATION No. 7

ON ROUTE 60 AT GOLDEN SPRINGS DRIVE
PM 26.53

LAYOUT
SCALE: 1" = 50'

L-7

STATE OF CALIFORNIA - DEPARTMENT OF TRANSPORTATION
Caltrans® OFFICE OF DESIGN D

FUNCTIONAL SUPERVISOR: KAREN FONG
CALCULATED-DESIGNED BY: NARENDRA DESAI
CHECKED BY: REFUGIO DOMINGUEZ
REVISED BY
DATE REVISED

LAST REVISION 00-00-00
DATE PLOTTED => 02-JAN-2013
TIME PLOTTED => 19:22

Dist	COUNTY	ROUTE	POST MILES TOTAL PROJECT	SHEET No.	TOTAL SHEETS
07	LA	5,10,14, 47,60,etc.	Var	9	72

REGISTERED CIVIL ENGINEER 8/30/12 DATE

10-22-12
PLANS APPROVAL DATE

REGISTERED PROFESSIONAL ENGINEER REFUGIO DOMINGUEZ No. 50820 Exp. 9/30/13 CIVIL STATE OF CALIFORNIA

THE STATE OF CALIFORNIA OR ITS OFFICERS OR AGENTS SHALL NOT BE RESPONSIBLE FOR THE ACCURACY OR COMPLETENESS OF SCANNED COPIES OF THIS PLAN SHEET.

NOTES:

1. FOR ACCURATE RIGHT OF WAY DATA, CONTACT RIGHT OF WAY ENGINEERING AT THE DISTRICT OFFICE.
2. EXISTING UTILITY FACILITIES HAVE NOT BEEN PLOTTED ON THESE PLANS.

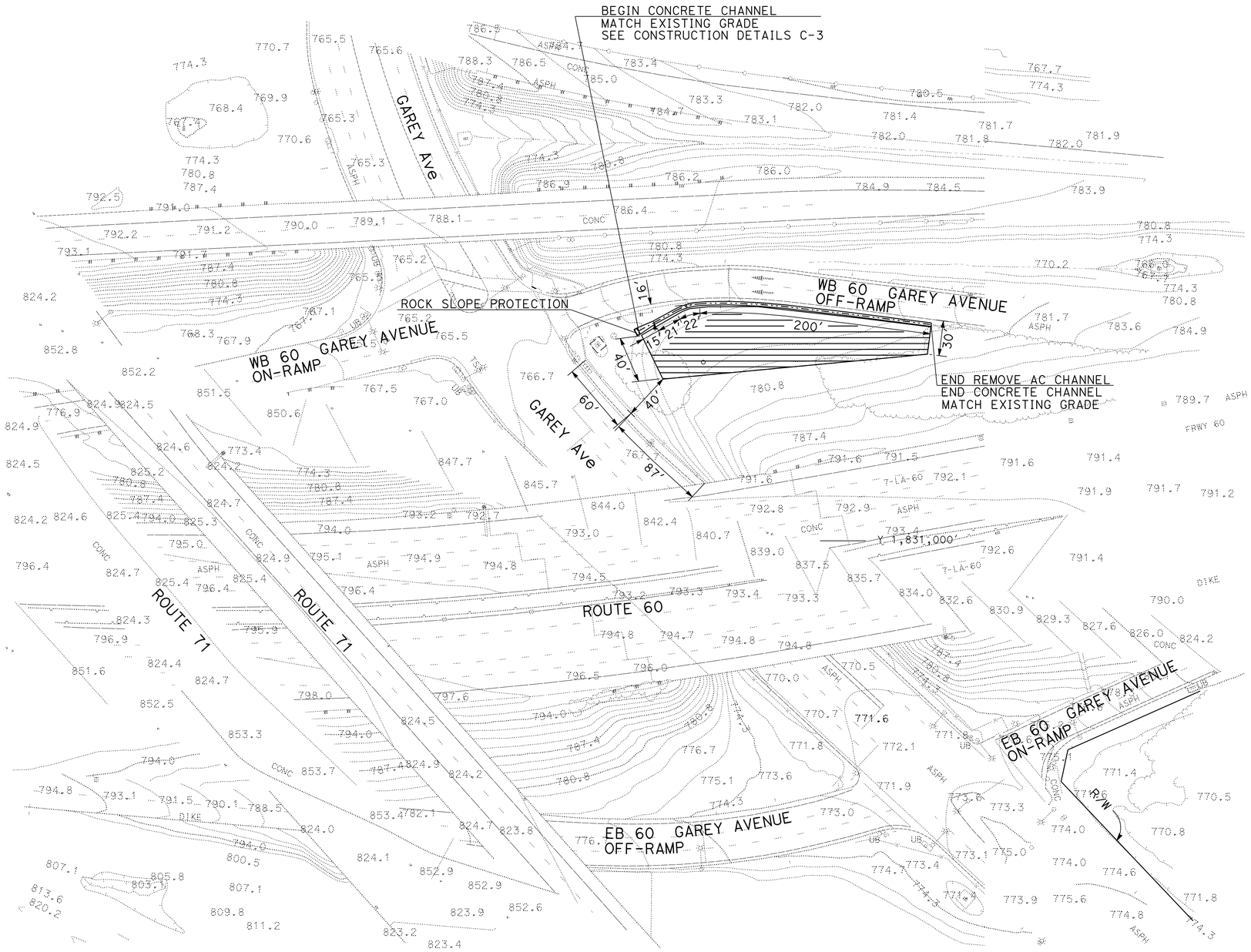

LOCATION No. 8

ON WB ROUTE 60 AT GAREY Ave OFF-RAMP
PM 29.20

LAYOUT
SCALE: 1" = 50'

L-8

STATE OF CALIFORNIA - DEPARTMENT OF TRANSPORTATION
Caltrans® OFFICE OF DESIGN D

FUNCTIONAL SUPERVISOR: KAREN FONG
CALCULATED-DESIGNED BY: MOHAMMAD MOHSENZADEH
CHECKED BY: REFUGIO DOMINGUEZ
REVISED BY
DATE REVISED

LAST REVISION 00-00-00
DATE PLOTTED => 02-JAN-2013
TIME PLOTTED => 19:22

BORDER LAST REVISED 7/2/2010
USERNAME => s125624
DGN FILE => 725880ea008.dgn
RELATIVE BORDER SCALE IS IN INCHES 0 1 2 3
UNIT 1819
PROJECT NUMBER & PHASE 07000201951

Dist	COUNTY	ROUTE	POST MILES TOTAL PROJECT	SHEET No.	TOTAL SHEETS
07	LA	5,10,14, 47,60,etc.	Var	10	72

REGISTERED CIVIL ENGINEER 8-30-12 DATE

10-22-12
PLANS APPROVAL DATE

REGISTERED PROFESSIONAL ENGINEER REFUGIO DOMINGUEZ No. 50820 Exp. 9/30/13 CIVIL STATE OF CALIFORNIA

THE STATE OF CALIFORNIA OR ITS OFFICERS OR AGENTS SHALL NOT BE RESPONSIBLE FOR THE ACCURACY OR COMPLETENESS OF SCANNED COPIES OF THIS PLAN SHEET.

NOTES:

1. FOR ACCURATE RIGHT OF WAY DATA, CONTACT RIGHT OF WAY ENGINEERING AT THE DISTRICT OFFICE.
2. EXISTING UTILITY FACILITIES HAVE NOT BEEN PLOTTED ON THESE PLANS.

CURVE DATA

No.	R	Δ	T	L
1	500.00′	25°48′10″	114.53′	225.17′

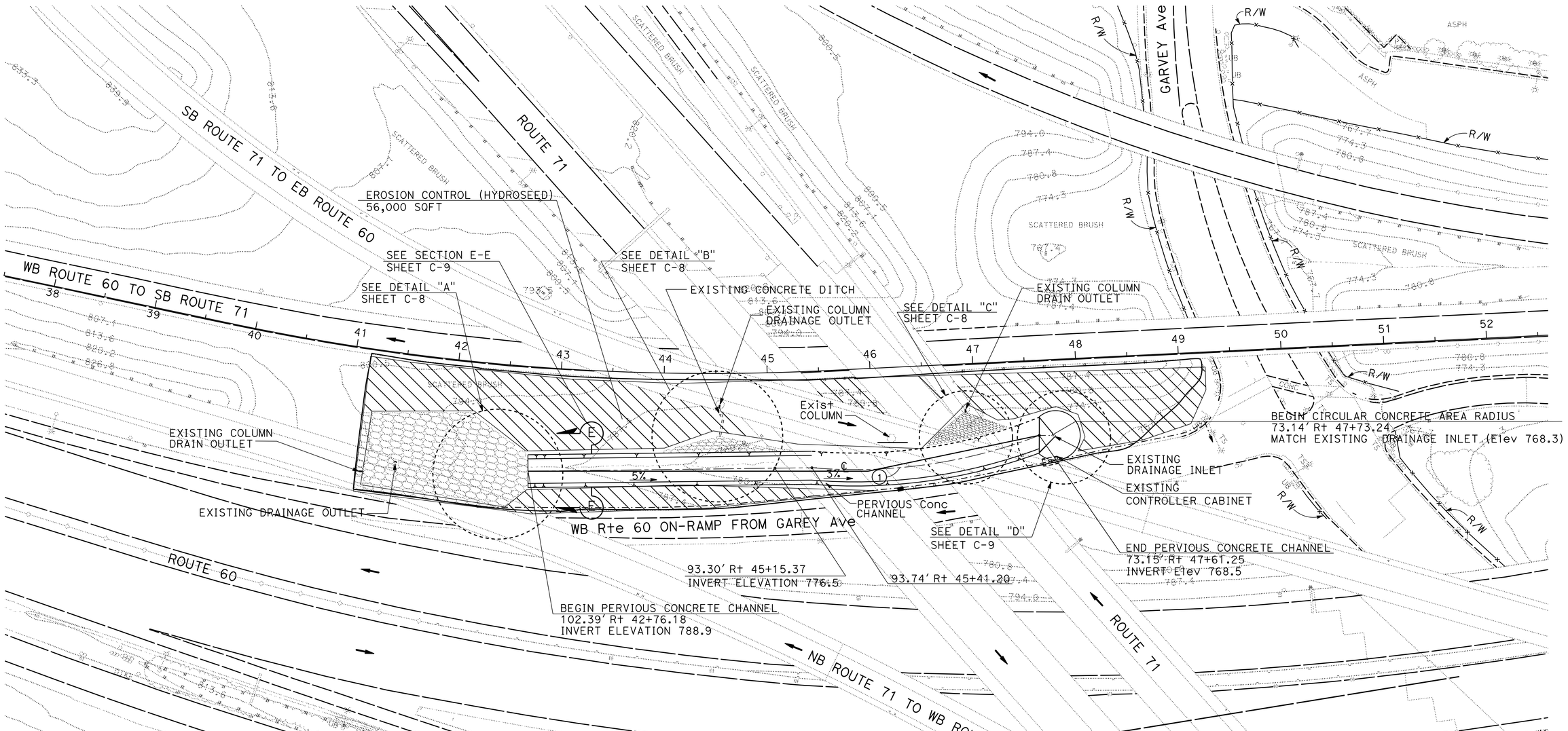

LOCATION No. 9

BETWEEN THE WB ROUTE 60 ON-RAMP AND CONNECTOR RAMP TO
EB ROUTE 71 AT GAREY Ave
PM 30.40

LAYOUT
SCALE: 1" = 50′

L-9

STATE OF CALIFORNIA - DEPARTMENT OF TRANSPORTATION
Caltrans® OFFICE OF DESIGN D

FUNCTIONAL SUPERVISOR: KAREN FONG
CALCULATED-DESIGNED BY: NGUYEN HUA
CHECKED BY: REFUGIO DOMINGUEZ
REVISED BY
DATE REVISED

LAST REVISION 00-00-00
DATE PLOTTED => 02-JAN-2013
TIME PLOTTED => 19:23

Dist	COUNTY	ROUTE	POST MILES TOTAL PROJECT	SHEET No.	TOTAL SHEETS
07	LA	5,10,14, 47,60,etc.	Var	11	72

REGISTERED CIVIL ENGINEER 8/30/12 DATE

10-22-12
PLANS APPROVAL DATE

REGISTERED PROFESSIONAL ENGINEER REFUGIO DOMINGUEZ No. 50820 Exp. 9/30/13 CIVIL STATE OF CALIFORNIA

THE STATE OF CALIFORNIA OR ITS OFFICERS OR AGENTS SHALL NOT BE RESPONSIBLE FOR THE ACCURACY OR COMPLETENESS OF SCANNED COPIES OF THIS PLAN SHEET.

NOTES:

1. FOR ACCURATE RIGHT OF WAY DATA, CONTACT RIGHT OF WAY ENGINEERING AT THE DISTRICT OFFICE.
2. EXISTING UTILITY FACILITIES HAVE NOT BEEN PLOTTED ON THESE PLANS.

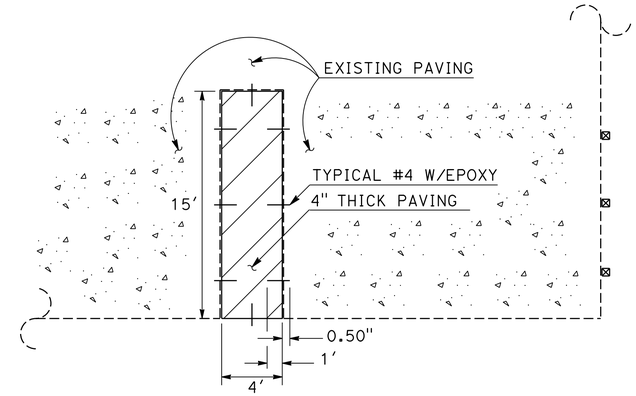

DETAIL B
PLAN VIEW

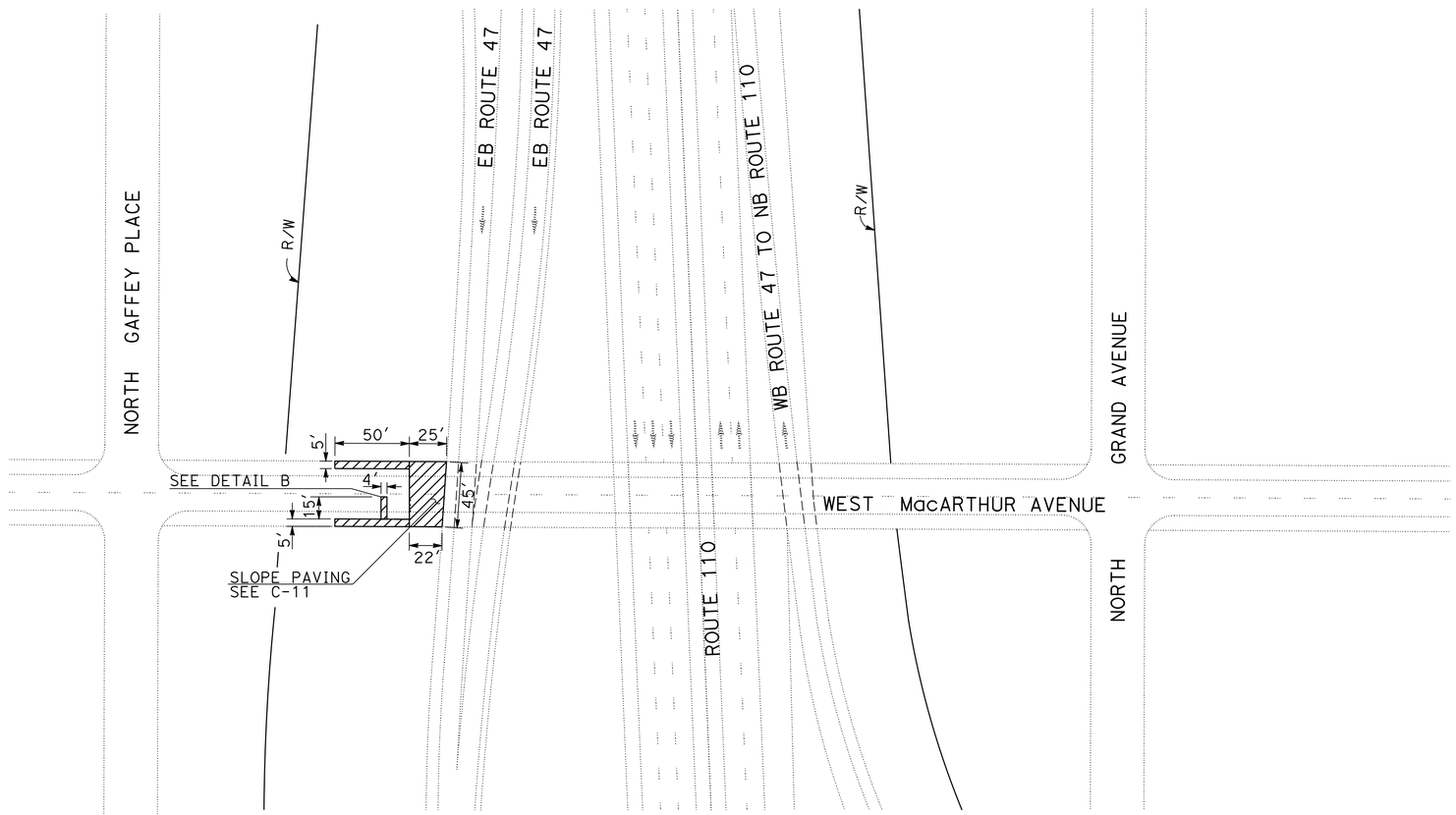

LOCATION No. 10
ON SB ROUTE 110 AT MacARTHUR Ave OC
PM 0.30

LAYOUT
SCALE: 1" = 50'

L-10

STATE OF CALIFORNIA - DEPARTMENT OF TRANSPORTATION
Caltrans® OFFICE OF DESIGN D

FUNCTIONAL SUPERVISOR: KAREN FONG
CALCULATED-DESIGNED BY: MOHAMMAD MOHSENZADEH
CHECKED BY: REFUGIO DOMINGUEZ
REVISED BY
DATE REVISED

LAST REVISION 00-00-00
DATE PLOTTED => 02-JAN-2013
TIME PLOTTED => 19:23

Dist	COUNTY	ROUTE	POST MILES TOTAL PROJECT	SHEET No.	TOTAL SHEETS
07	LA	5,10,14, 47,60,etc.	Var	12	72

REGISTERED CIVIL ENGINEER 8/30/12 DATE

10-22-12
PLANS APPROVAL DATE

REGISTERED PROFESSIONAL ENGINEER REFUGIO DOMINGUEZ No. 50820 Exp. 9/30/13 CIVIL STATE OF CALIFORNIA

THE STATE OF CALIFORNIA OR ITS OFFICERS OR AGENTS SHALL NOT BE RESPONSIBLE FOR THE ACCURACY OR COMPLETENESS OF SCANNED COPIES OF THIS PLAN SHEET.

NOTES:

1. FOR ACCURATE RIGHT OF WAY DATA, CONTACT RIGHT OF WAY ENGINEERING AT THE DISTRICT OFFICE.
2. EXISTING UTILITY FACILITIES HAVE NOT BEEN PLOTTED ON THESE PLANS.

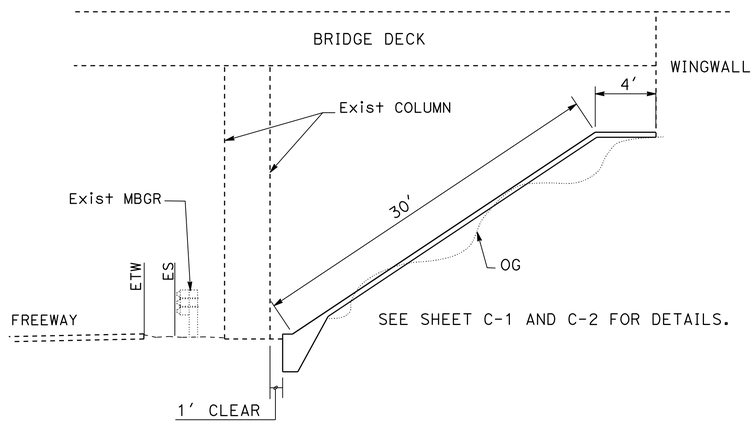

SECTION A-A
NO SCALE

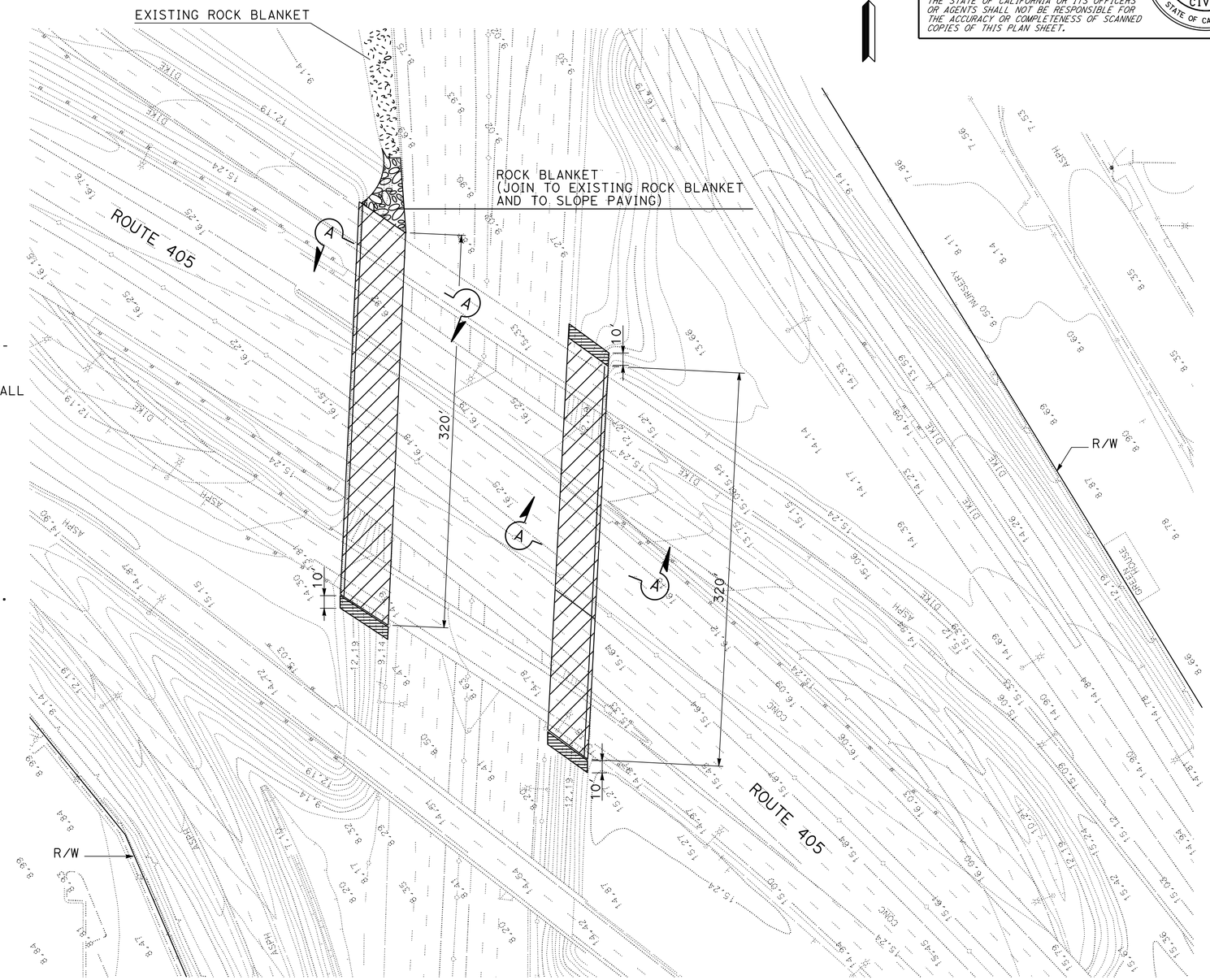

LOCATION No. 11

ON ROUTE 110 AT ROUTE 405 SEPARATION
PM 8.80

LAYOUT
SCALE: 1" = 50'

L-11

STATE OF CALIFORNIA - DEPARTMENT OF TRANSPORTATION
Caltrans® OFFICE OF DESIGN D

FUNCTIONAL SUPERVISOR: KAREN FONG
CALCULATED-DESIGNED BY: NGUYEN HUA
CHECKED BY: REFUGIO DOMINGUEZ
REVISED BY
DATE REVISED

LAST REVISION 00-00-00
DATE PLOTTED => 02-JAN-2013
TIME PLOTTED => 19:23

Dist	COUNTY	ROUTE	POST MILES TOTAL PROJECT	SHEET No.	TOTAL SHEETS
07	LA	5,10,14, 47,60,etc.	Var	13	72

REGISTERED CIVIL ENGINEER 8/30/12 DATE

10-22-12
PLANS APPROVAL DATE

REGISTERED PROFESSIONAL ENGINEER REFUGIO DOMINGUEZ No. 50820 Exp. 9/30/13 CIVIL STATE OF CALIFORNIA

THE STATE OF CALIFORNIA OR ITS OFFICERS OR AGENTS SHALL NOT BE RESPONSIBLE FOR THE ACCURACY OR COMPLETENESS OF SCANNED COPIES OF THIS PLAN SHEET.

NOTES:

1. RIGHT OF WAY LIMITS ARE INDETERMINATE AND ARE NOT SHOWN. THE CONTRACTOR MUST CONTACT RIGHT OF WAY ENGINEERING AT THE DISTRICT OFFICE FOR CONDITIONS OF USE PRIOR TO COMMENCING WORK.
2. EXISTING UTILITY FACILITIES HAVE NOT BEEN PLOTTED ON THESE PLANS.

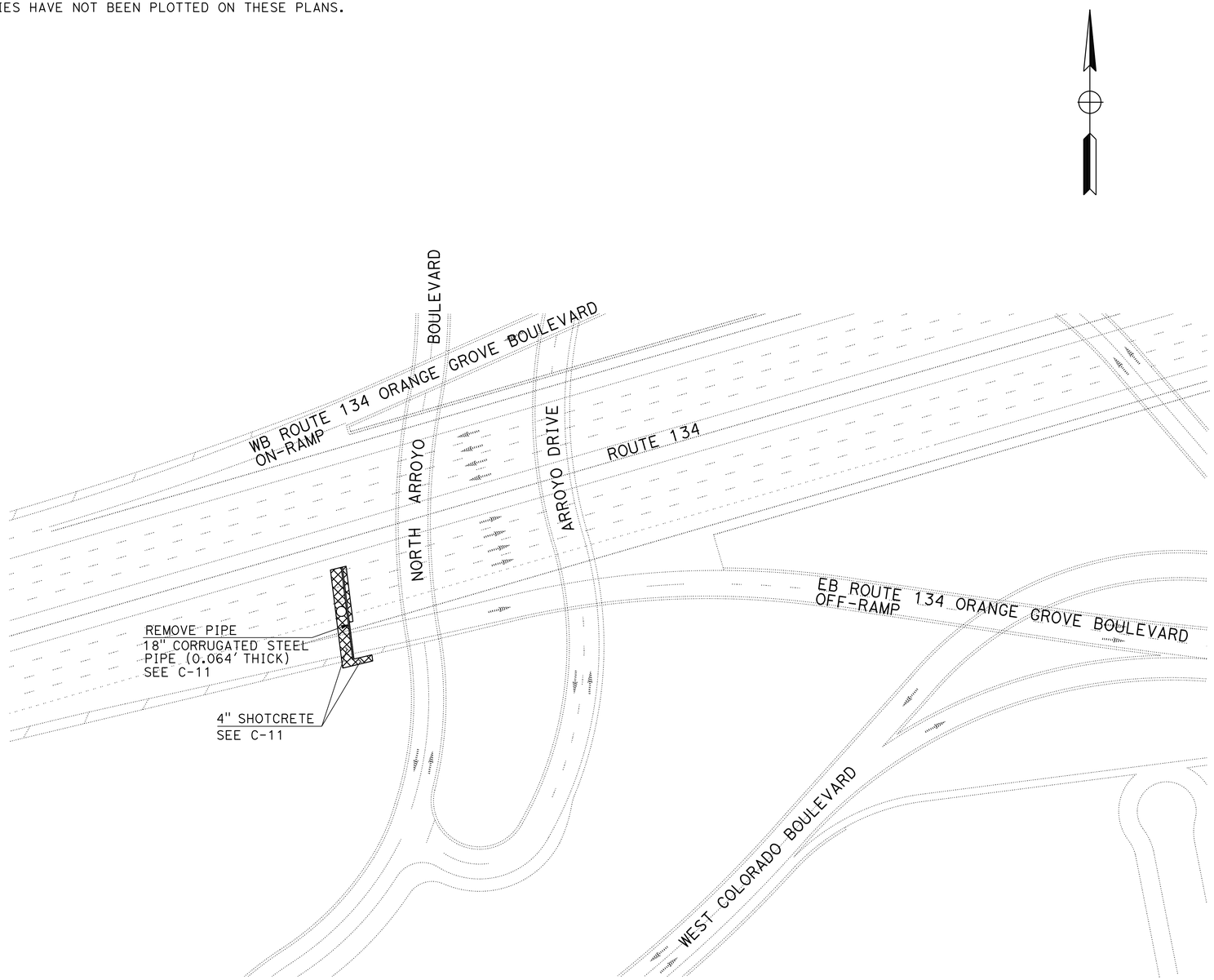

LOCATION No. 12

ON EB ROUTE 134 AT ARROYO SECO SEPARATION
PM 12.60

LAYOUT
SCALE: 1" = 50'

L-12

STATE OF CALIFORNIA - DEPARTMENT OF TRANSPORTATION
Caltrans® OFFICE OF DESIGN D

FUNCTIONAL SUPERVISOR: KAREN FONG
CALCULATED-DESIGNED BY: MOHAMMAD MOHSENZADEH
CHECKED BY: REFUGIO DOMINGUEZ
REVISED BY
DATE REVISED

LAST REVISION 00-00-00
DATE PLOTTED => 02-JAN-2013
TIME PLOTTED => 19:23

Dist	COUNTY	ROUTE	POST MILES TOTAL PROJECT	SHEET No.	TOTAL SHEETS
07	LA	5,10,14, 47,60,etc.	Var	14	72

REGISTERED CIVIL ENGINEER 8/30/12 DATE

10-22-12
PLANS APPROVAL DATE

REGISTERED PROFESSIONAL ENGINEER REFUGIO DOMINGUEZ No. 50820 Exp. 9/30/13 CIVIL STATE OF CALIFORNIA

THE STATE OF CALIFORNIA OR ITS OFFICERS OR AGENTS SHALL NOT BE RESPONSIBLE FOR THE ACCURACY OR COMPLETENESS OF SCANNED COPIES OF THIS PLAN SHEET.

NOTES:

1. FOR ACCURATE RIGHT OF WAY DATA, CONTACT RIGHT OF WAY ENGINEERING AT THE DISTRICT OFFICE.
2. EXISTING UTILITY FACILITIES HAVE NOT BEEN PLOTTED ON THESE PLANS.

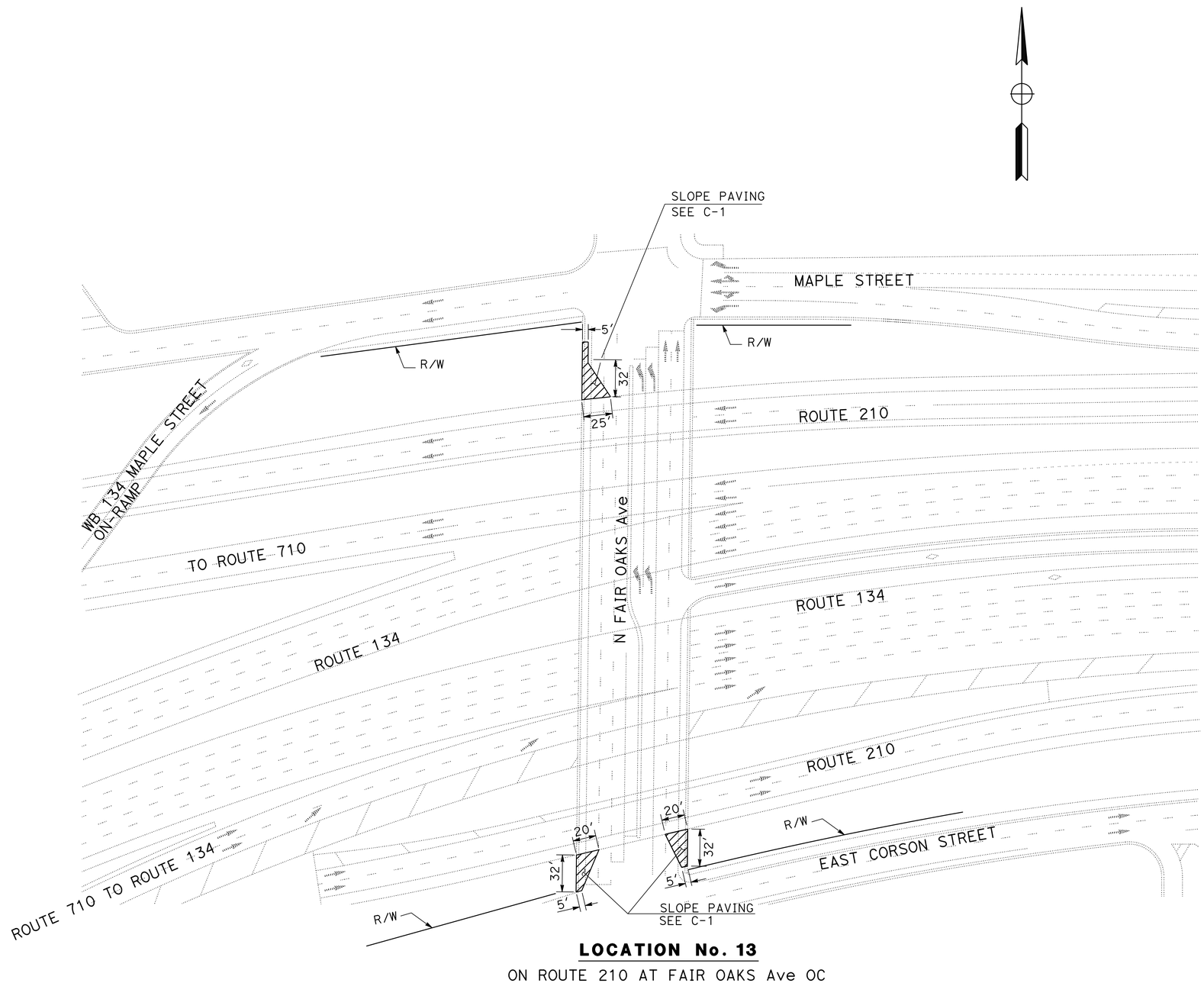

LOCATION No. 13

ON ROUTE 210 AT FAIR OAKS Ave OC
PM R25.29

LAYOUT
SCALE: 1" = 50'

L-13

STATE OF CALIFORNIA - DEPARTMENT OF TRANSPORTATION
Caltrans® **OFFICE OF DESIGN D**

FUNCTIONAL SUPERVISOR: KAREN FONG
CALCULATED-DESIGNED BY: MOHAMMAD MOHSENZADEH
CHECKED BY: REFUGIO DOMINGUEZ
REVISED BY
DATE REVISED

LAST REVISION 00-00-00
DATE PLOTTED => 02-JAN-2013
TIME PLOTTED => 19:23

Dist	COUNTY	ROUTE	POST MILES TOTAL PROJECT	SHEET No.	TOTAL SHEETS
07	LA	5,10,14, 47,60,etc.	Var	15	72

REGISTERED CIVIL ENGINEER 8/30/12 DATE

10-22-12
PLANS APPROVAL DATE

REGISTERED PROFESSIONAL ENGINEER REFUGIO DOMINGUEZ No. 50820 Exp. 9/30/13 CIVIL STATE OF CALIFORNIA

THE STATE OF CALIFORNIA OR ITS OFFICERS OR AGENTS SHALL NOT BE RESPONSIBLE FOR THE ACCURACY OR COMPLETENESS OF SCANNED COPIES OF THIS PLAN SHEET.

NOTES:

1. FOR ACCURATE RIGHT OF WAY DATA, CONTACT RIGHT OF WAY ENGINEERING AT THE DISTRICT OFFICE.
2. EXISTING UTILITY FACILITIES HAVE NOT BEEN PLOTTED ON THESE PLANS.

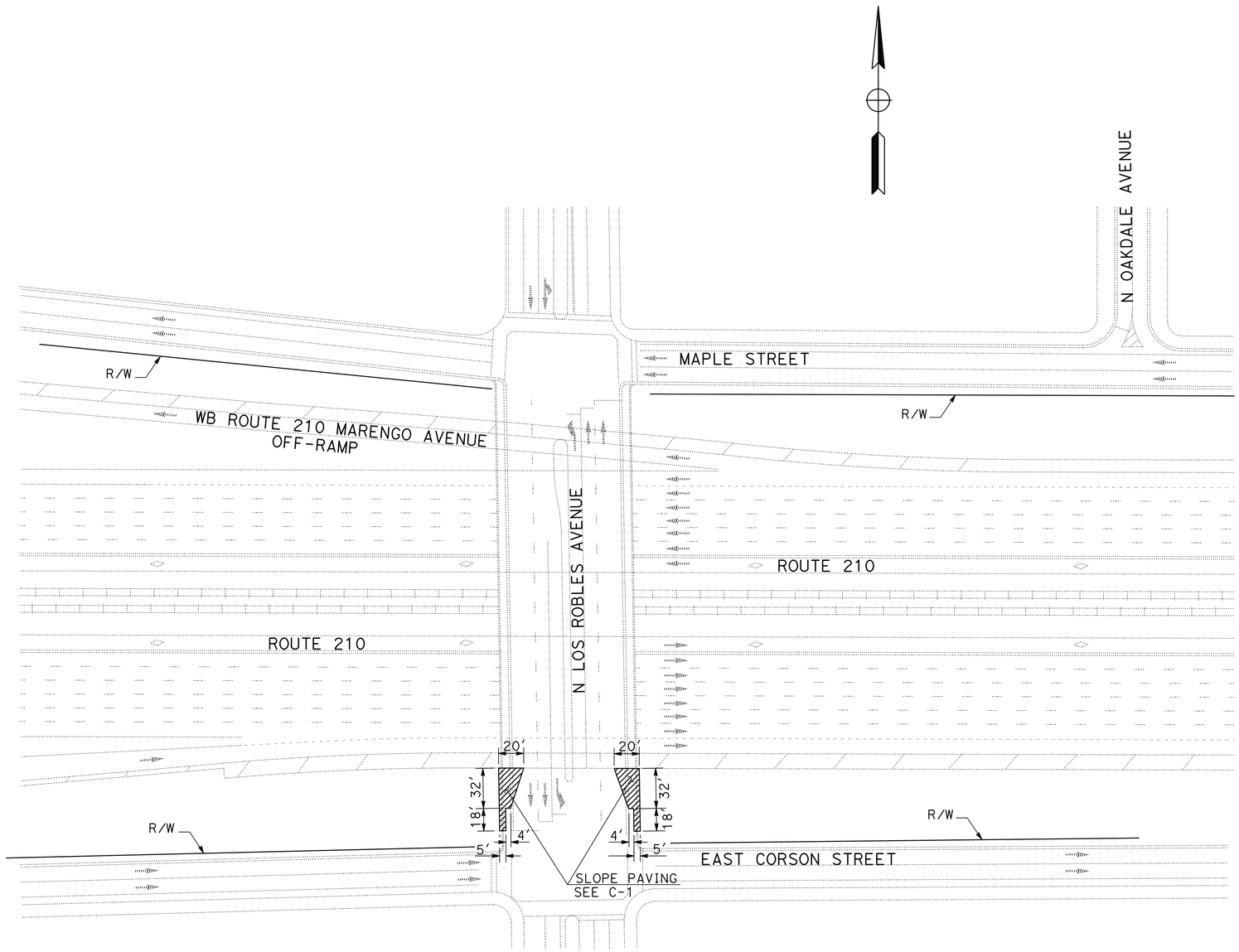

LOCATION No. 14

ON EB ROUTE 210 AT LOS ROBLES Ave OC
PM R25.81

LAYOUT
SCALE: 1" = 50'

L-14

STATE OF CALIFORNIA - DEPARTMENT OF TRANSPORTATION
Caltrans® **OFFICE OF DESIGN D**

FUNCTIONAL SUPERVISOR: KAREN FONG
CALCULATED-DESIGNED BY: MOHAMMAD MOHSENZADEH
CHECKED BY: REFUGIO DOMINGUEZ
REVISED BY
DATE REVISED

LAST REVISION 00-00-00
DATE PLOTTED => 02-JAN-2013
TIME PLOTTED => 19:23

Dist	COUNTY	ROUTE	POST MILES TOTAL PROJECT	SHEET No.	TOTAL SHEETS
07	LA	5,10,14 47,60,etc.	Var	16	72

REGISTERED CIVIL ENGINEER 8/30/12 DATE

10-22-12
PLANS APPROVAL DATE

REGISTERED PROFESSIONAL ENGINEER REFUGIO DOMINGUEZ No. 50820 Exp. 9/30/13 CIVIL STATE OF CALIFORNIA

THE STATE OF CALIFORNIA OR ITS OFFICERS OR AGENTS SHALL NOT BE RESPONSIBLE FOR THE ACCURACY OR COMPLETENESS OF SCANNED COPIES OF THIS PLAN SHEET.

NOTES:

1. FOR ACCURATE RIGHT OF WAY DATA, CONTACT RIGHT OF WAY ENGINEERING AT THE DISTRICT OFFICE.
2. EXISTING UTILITY FACILITIES HAVE NOT BEEN PLOTTED ON THESE PLANS.

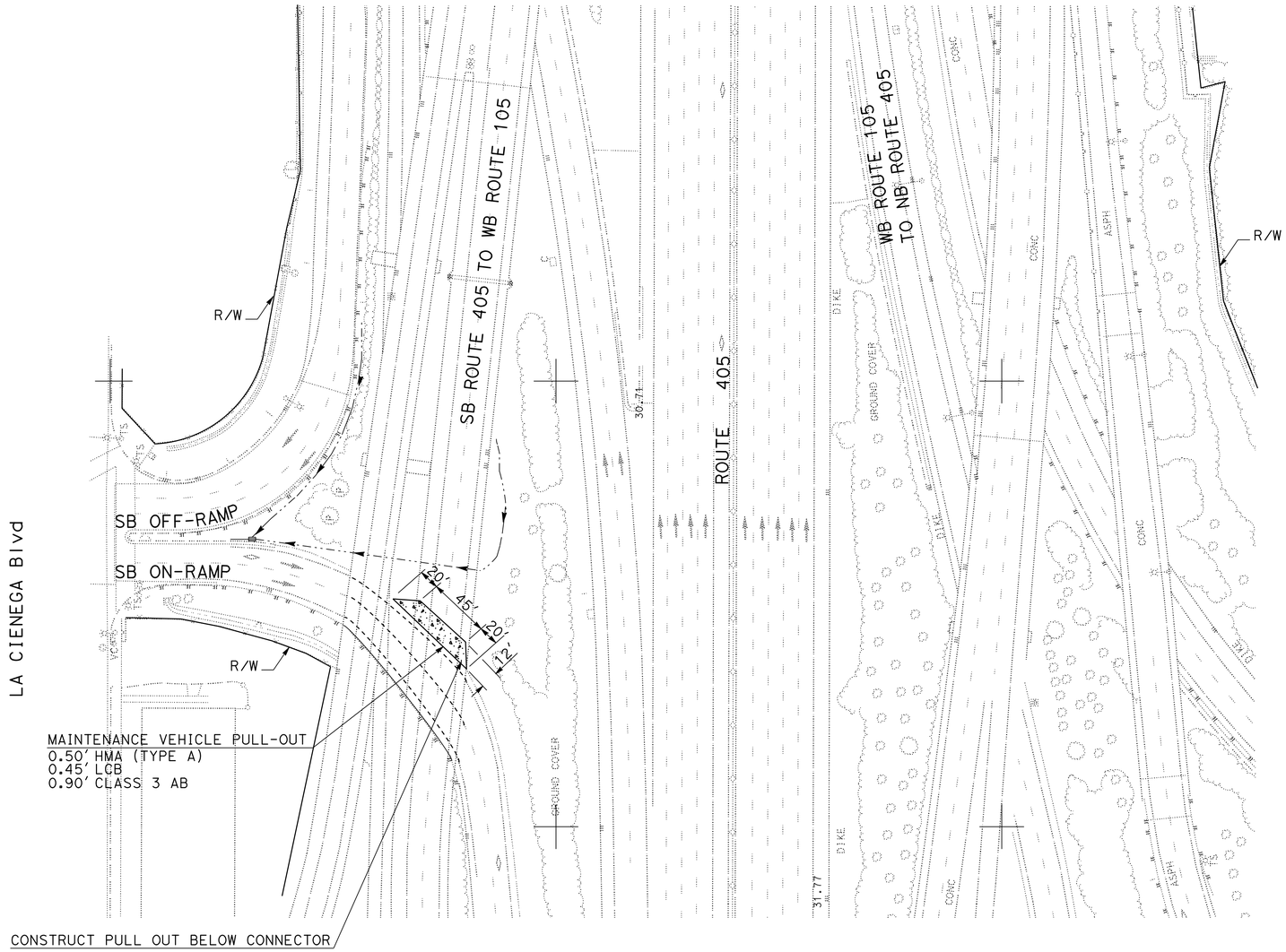

LOCATION No. 15

ON SB ROUTE 405 AT LA CIENEGA Blvd UC
PM 21.40

LAYOUT
SCALE: 1" = 50'

L-15

STATE OF CALIFORNIA - DEPARTMENT OF TRANSPORTATION
Caltrans® OFFICE OF DESIGN D

FUNCTIONAL SUPERVISOR: KAREN FONG
CALCULATED-DESIGNED BY: RICHARD DOUGHERTY
CHECKED BY: REFUGIO DOMINGUEZ
REVISED BY
DATE REVISED

LAST REVISION 00-00-00
DATE PLOTTED => 02-JAN-2013
TIME PLOTTED => 19:23

Dist	COUNTY	ROUTE	POST MILES TOTAL PROJECT	SHEET No.	TOTAL SHEETS
07	LA	5,10,14, 47,60,etc.	Var	17	72

REGISTERED CIVIL ENGINEER 8/30/12 DATE

10-22-12
PLANS APPROVAL DATE

REGISTERED PROFESSIONAL ENGINEER REFUGIO DOMINGUEZ No. 50820 Exp. 9/30/13 CIVIL STATE OF CALIFORNIA

THE STATE OF CALIFORNIA OR ITS OFFICERS OR AGENTS SHALL NOT BE RESPONSIBLE FOR THE ACCURACY OR COMPLETENESS OF SCANNED COPIES OF THIS PLAN SHEET.

NOTES:

1. FOR ACCURATE RIGHT OF WAY DATA, CONTACT RIGHT OF WAY ENGINEERING AT THE DISTRICT OFFICE.
2. EXISTING UTILITY FACILITIES HAVE NOT BEEN PLOTTED ON THESE PLANS.
3. SEE C-1 AND C-2 FOR SLOPE PAVING DETAILS.

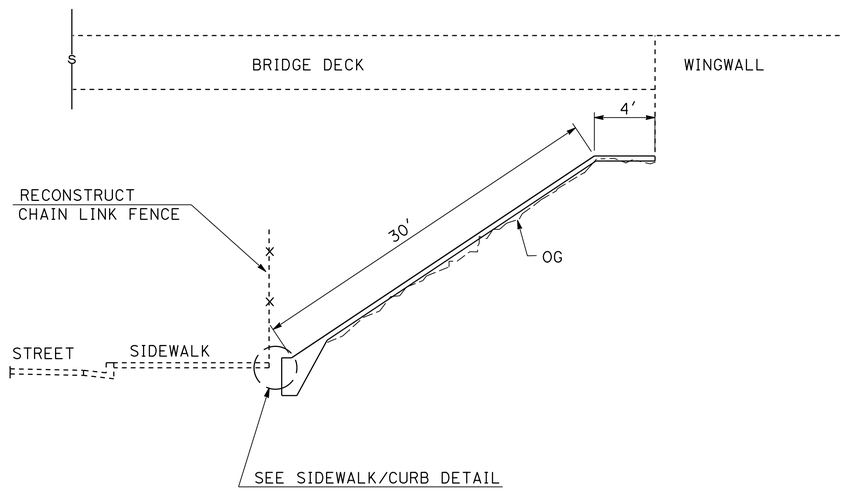

SECTION A-A
NO SCALE

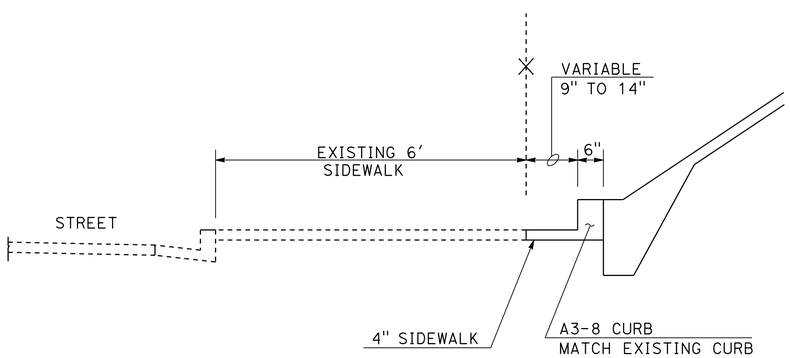

SIDEWALK/CURB DETAIL
NO SCALE

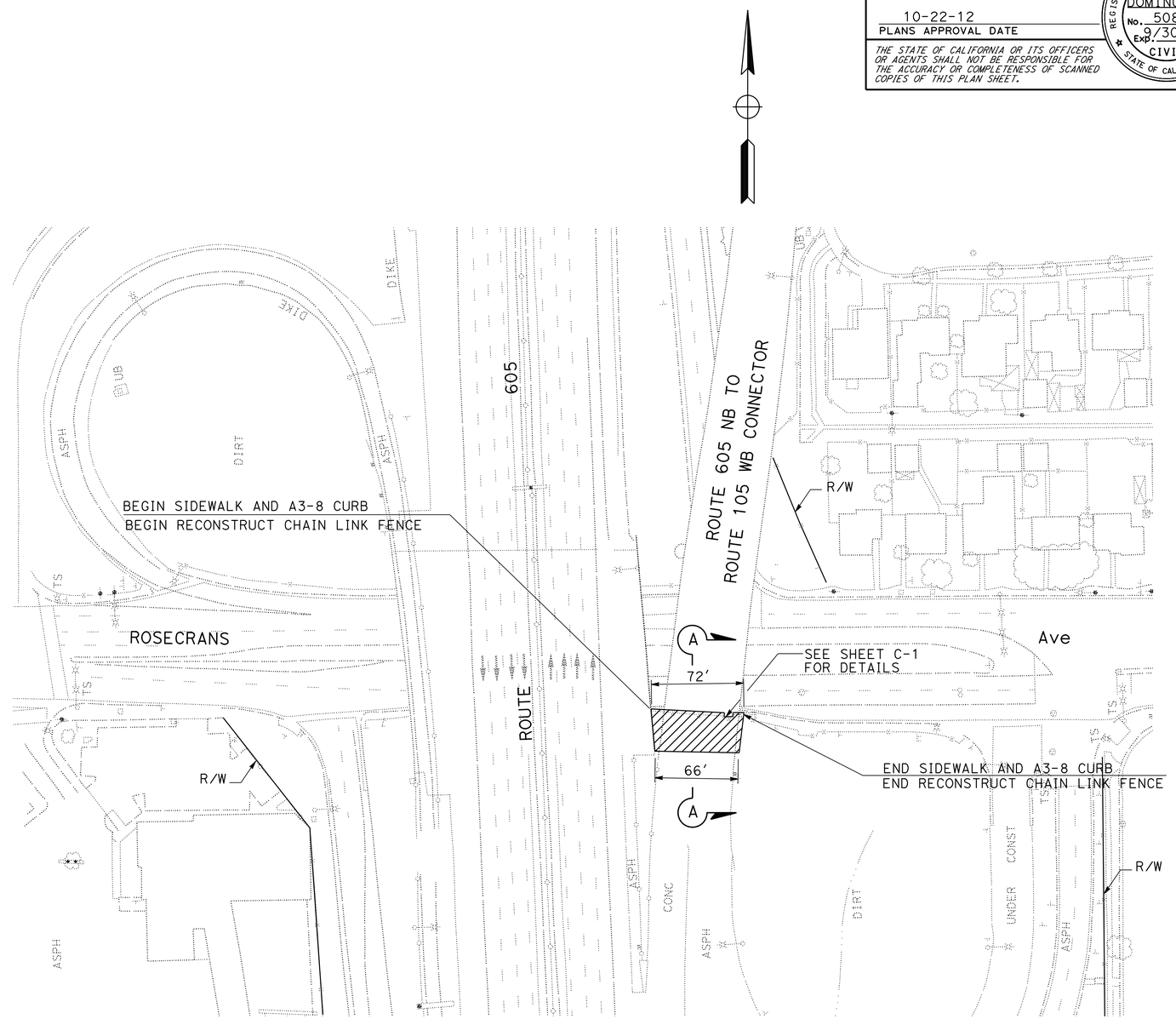

LOCATION No. 16

ON ROUTE 605 AT ROSECRANS Ave UC
PM 6.80

LAYOUT
SCALE: 1" = 50'

L-16

STATE OF CALIFORNIA - DEPARTMENT OF TRANSPORTATION
Caltrans® OFFICE OF DESIGN D

FUNCTIONAL SUPERVISOR: KAREN FONG
CALCULATED-DESIGNED BY: NARENDRA DESAI
CHECKED BY: REFUGIO DOMINGUEZ
REVISED BY
DATE REVISED

LAST REVISION 00-00-00
DATE PLOTTED => 02-JAN-2013
TIME PLOTTED => 19:23

Dist	COUNTY	ROUTE	POST MILES TOTAL PROJECT	SHEET No.	TOTAL SHEETS
07	LA	5,10,14 47,60, etc.	Var	18	72

REGISTERED CIVIL ENGINEER 8-30-12 DATE

10-22-12
PLANS APPROVAL DATE

REGISTERED PROFESSIONAL ENGINEER REFUGIO DOMINGUEZ No. 50820 Exp. 9/30/13 CIVIL STATE OF CALIFORNIA

THE STATE OF CALIFORNIA OR ITS OFFICERS OR AGENTS SHALL NOT BE RESPONSIBLE FOR THE ACCURACY OR COMPLETENESS OF SCANNED COPIES OF THIS PLAN SHEET.

NOTES:

1. FOR ACCURATE RIGHT OF WAY DATA, CONTACT RIGHT OF WAY ENGINEERING AT THE DISTRICT OFFICE.
2. EXISTING UTILITY FACILITIES HAVE NOT BEEN PLOTTED ON THESE PLANS.
3. SEE C-1 AND C-2 FOR SLOPE PAVING DETAILS.

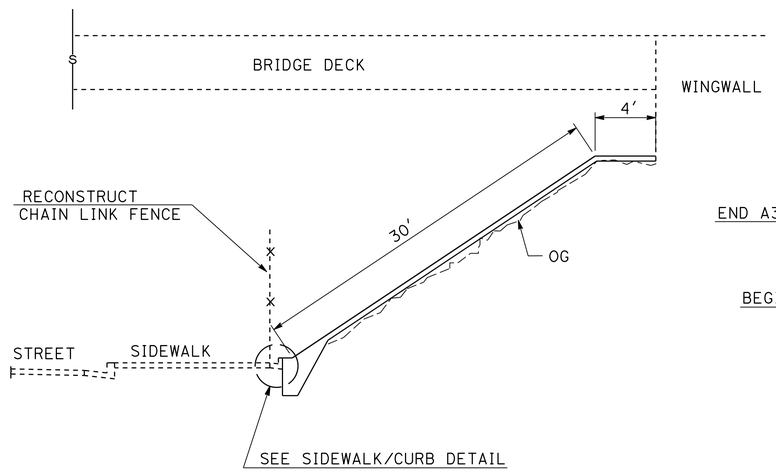

SECTION A-A
NO SCALE

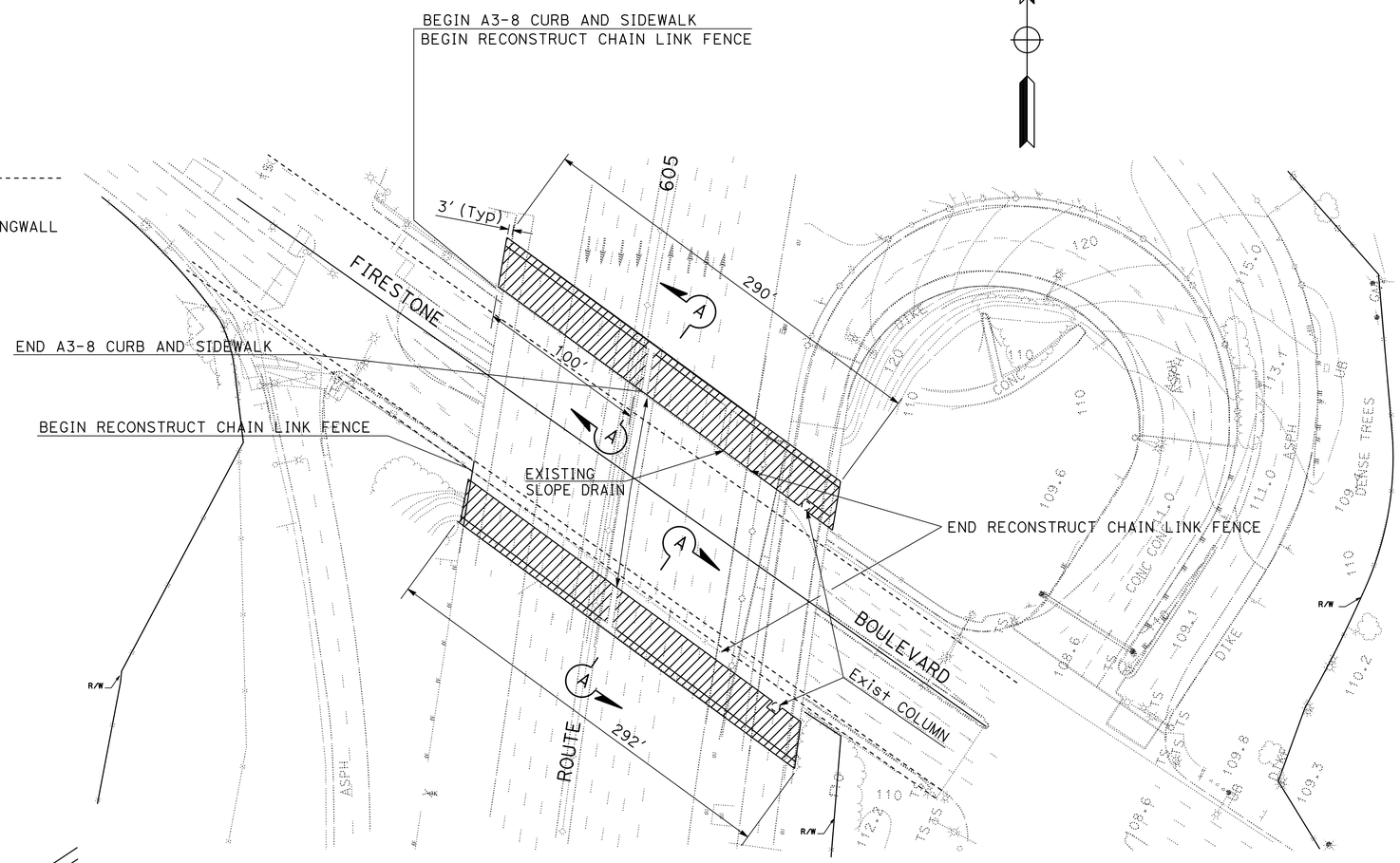

LOCATION No. 17
ON ROUTE 605 AT FIRESTONE Blvd UC
PM R8.40

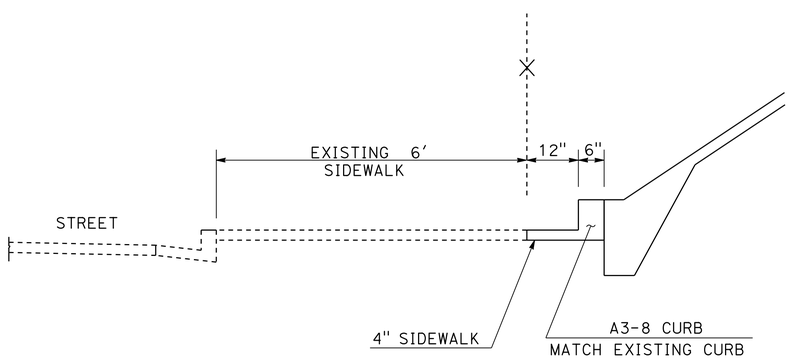

SIDEWALK/CURB DETAIL
NORTH SIDE ABUTMENT
NO SCALE

LAYOUT
SCALE: 1" = 50'

L-17

STATE OF CALIFORNIA - DEPARTMENT OF TRANSPORTATION
Caltrans® OFFICE OF DESIGN D
FUNCTIONAL SUPERVISOR: KAREN FONG
CALCULATED-DESIGNED BY: NARENDRA DESAI
CHECKED BY: REFUGIO DOMINGUEZ
REVISED BY
DATE REVISED

LAST REVISION 00-00-00
DATE PLOTTED => 02-JAN-2013
TIME PLOTTED => 19:23

Dist	COUNTY	ROUTE	POST MILES TOTAL PROJECT	SHEET No.	TOTAL SHEETS
07	LA	5,10,14, 47,60, etc.	Var	19	72

REGISTERED CIVIL ENGINEER 8-30-12 DATE

10-22-12
PLANS APPROVAL DATE

REGISTERED PROFESSIONAL ENGINEER REFUGIO DOMINGUEZ No. 50820 Exp. 9/30/13 CIVIL STATE OF CALIFORNIA

THE STATE OF CALIFORNIA OR ITS OFFICERS OR AGENTS SHALL NOT BE RESPONSIBLE FOR THE ACCURACY OR COMPLETENESS OF SCANNED COPIES OF THIS PLAN SHEET.

NOTES:

1. FOR ACCURATE RIGHT OF WAY DATA, CONTACT RIGHT OF WAY ENGINEERING AT THE DISTRICT OFFICE.
2. EXISTING UTILITY FACILITIES HAVE NOT BEEN PLOTTED ON THESE PLANS.
3. SEE C-1 AND C-2 FOR SLOPE PAVING DETAILS.

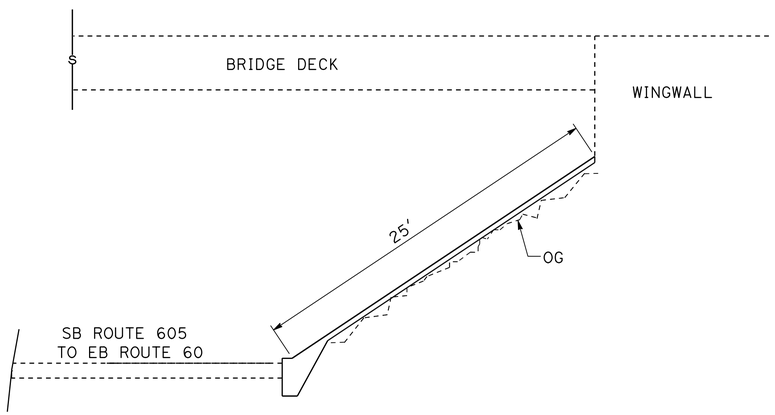

SECTION A-A
NO SCALE

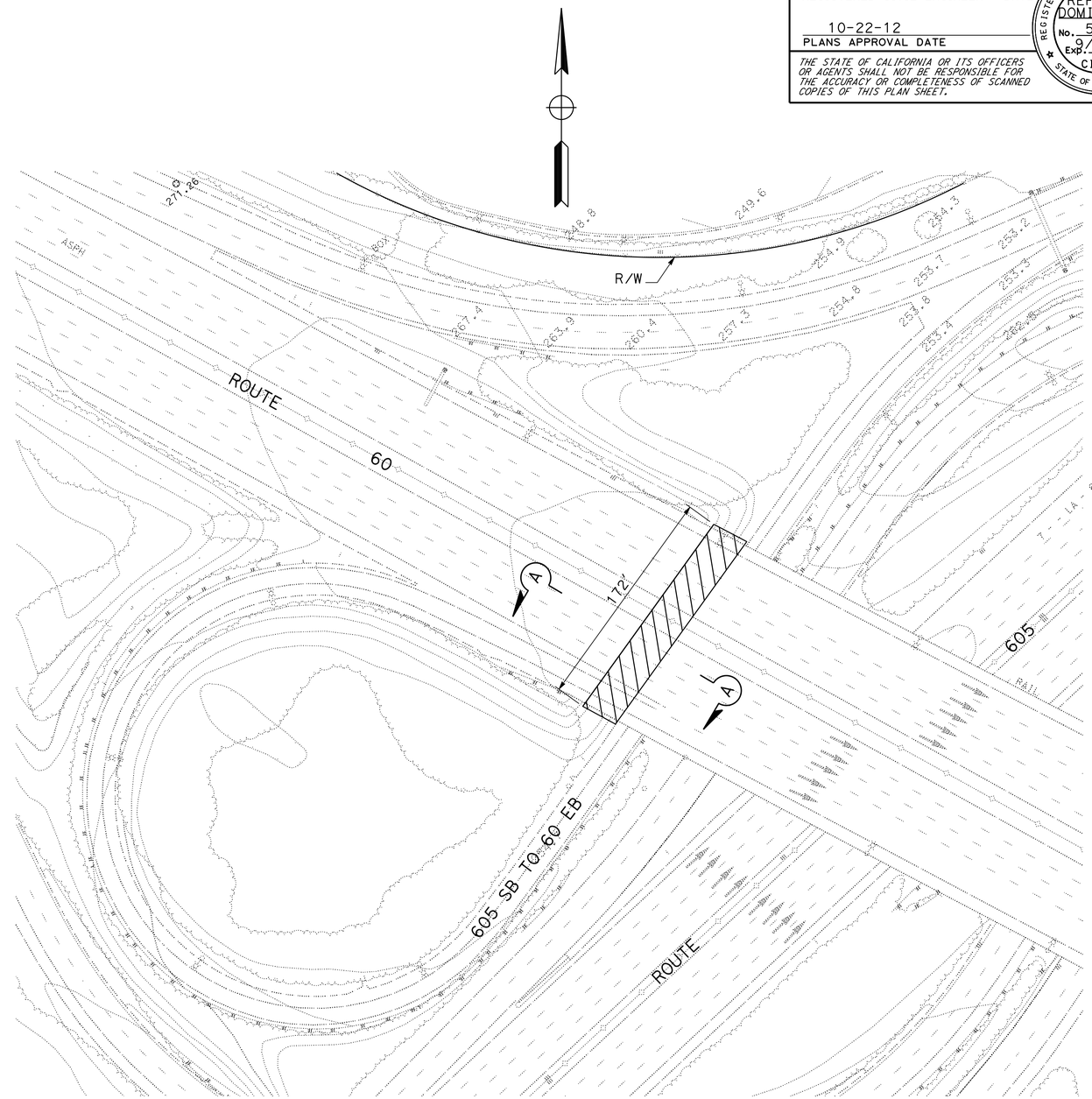

LOCATION No. 18
ON ROUTE 60/605 SEPARATION
PM 17.40

LAYOUT
SCALE: 1" = 50'

L-18

STATE OF CALIFORNIA - DEPARTMENT OF TRANSPORTATION
Caltrans® OFFICE OF DESIGN D

FUNCTIONAL SUPERVISOR: KAREN FONG
CALCULATED-DESIGNED BY: NARENDRA DESAI
CHECKED BY: REFUGIO DOMINGUEZ
REVISED BY
DATE REVISED

LAST REVISION 00-00-00
DATE PLOTTED => 02-JAN-2013
TIME PLOTTED => 19:23

BORDER LAST REVISED 7/2/2010
USERNAME => s125624
DGN FILE => 725880ea018.dgn
RELATIVE BORDER SCALE IS IN INCHES 0 1 2 3
UNIT 1819
PROJECT NUMBER & PHASE 07000201951

Dist	COUNTY	ROUTE	POST MILES TOTAL PROJECT	SHEET No.	TOTAL SHEETS
07	LA	5,10,14, 47,60,etc.	Var	20	72

REGISTERED CIVIL ENGINEER 8-30-12 DATE

PLANS APPROVAL DATE

REGISTERED PROFESSIONAL ENGINEER REFUGIO DOMINGUEZ No. 50820 Exp. 9-30-13 CIVIL STATE OF CALIFORNIA

THE STATE OF CALIFORNIA OR ITS OFFICERS OR AGENTS SHALL NOT BE RESPONSIBLE FOR THE ACCURACY OR COMPLETENESS OF SCANNED

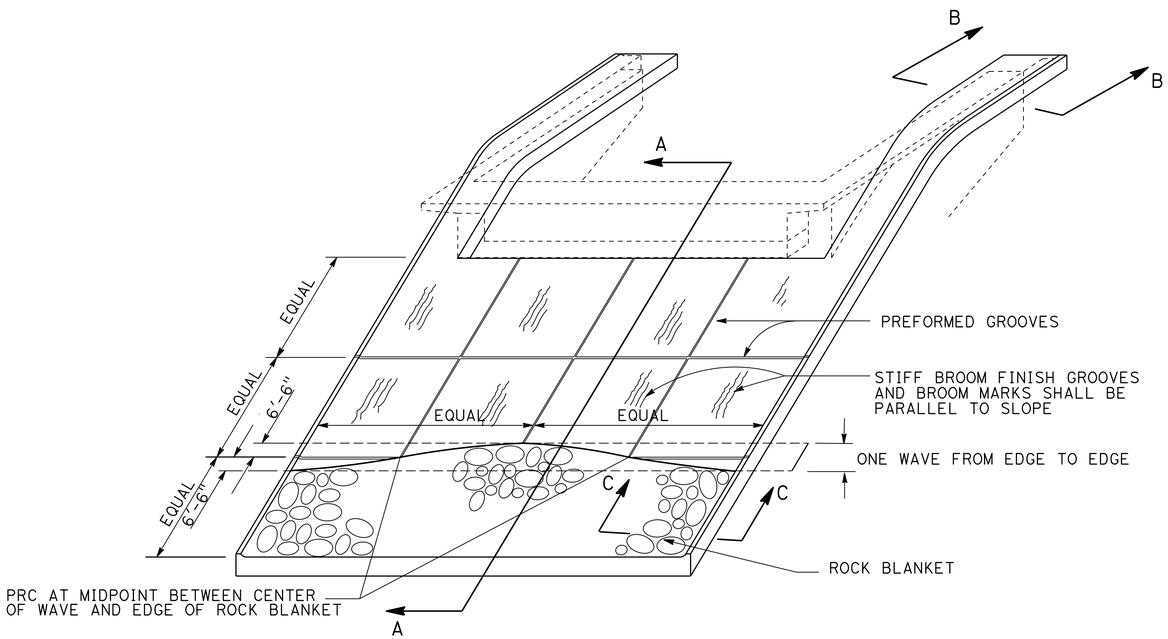

PICTORIAL VIEW OF TYPICAL INSTALLATION

AT LOCATIONS No. 7, 10, 11, 13, 14, 16, 17, 18

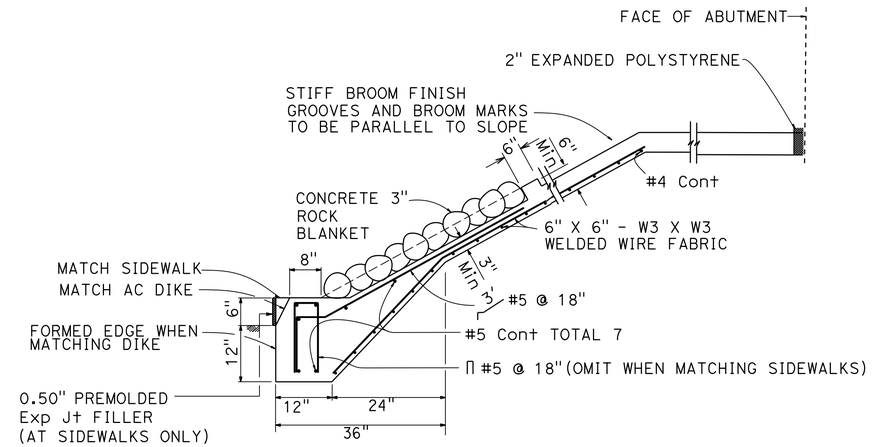

SECTION A-A

NOTE:
FOR ACTUAL LIMITS OF SLOPE PAVING ON THIS PROJECT, SEE LAYOUT SHEETS L-7, L-10, L-11, L-13 L-14, L-16, L-17, L-18

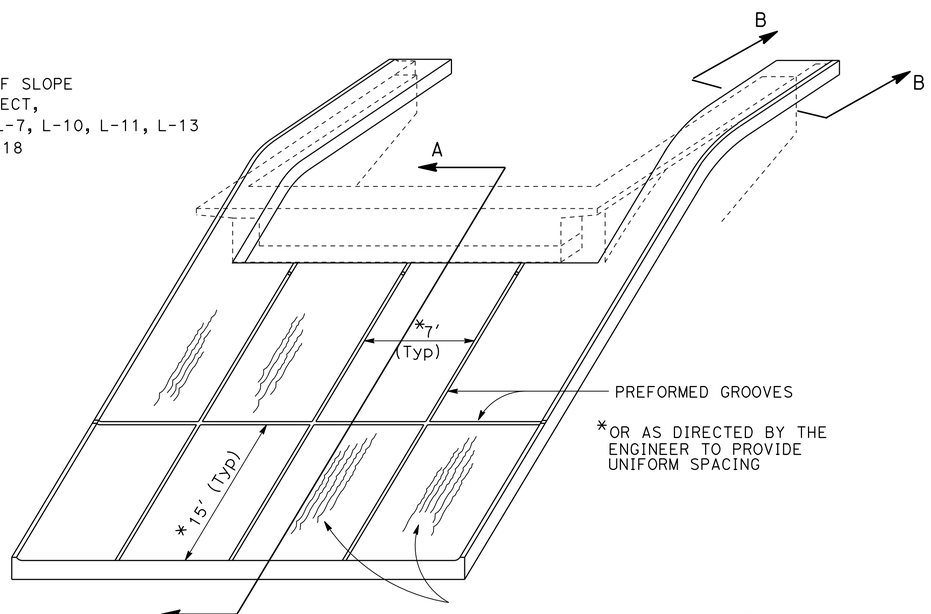

PICTORIAL VIEW OF TYPICAL INSTALLATION

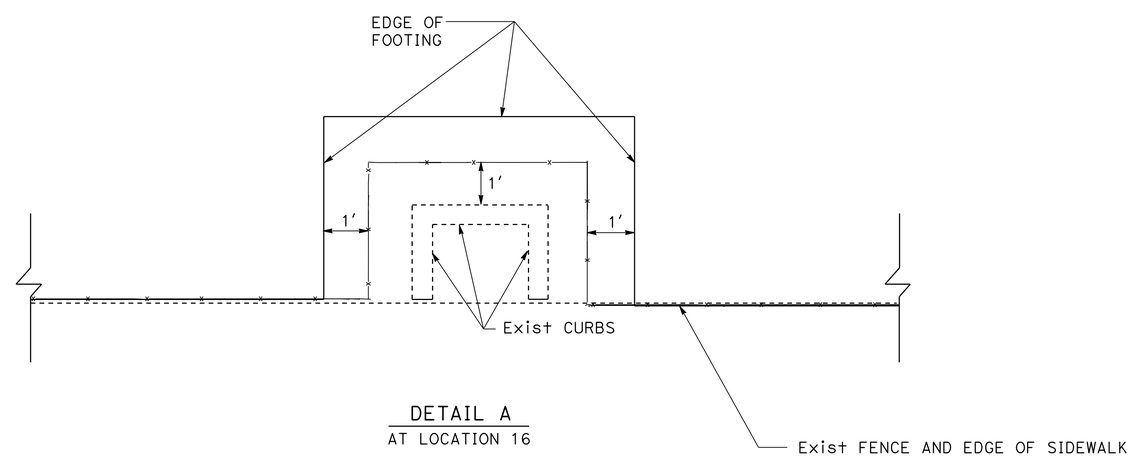

DETAIL A

AT LOCATION 16

CONSTRUCTION DETAILS

NO SCALE

C-1

STATE OF CALIFORNIA - DEPARTMENT OF TRANSPORTATION

Caltrans® OFFICE OF DESIGN D

FUNCTIONAL SUPERVISOR: KAREN FONG

CALCULATED-DESIGNED BY: NARENDRA DESAI

CHECKED BY: REFUGIO DOMINGUEZ

REVISED BY

DATE REVISED

LAST REVISION 10-09-12

DATE PLOTTED => 02-JAN-2013

TIME PLOTTED => 19:23

Dist	COUNTY	ROUTE	POST MILES TOTAL PROJECT	SHEET No.	TOTAL SHEETS
07	LA	5,10,14, 47,60,etc.	Var	21	72

REGISTERED CIVIL ENGINEER 8-30-12 DATE

PLANS APPROVAL DATE

REGISTERED PROFESSIONAL ENGINEER REFUGIO DOMINGUEZ No. 50820 Exp. 9-30-13 CIVIL STATE OF CALIFORNIA

THE STATE OF CALIFORNIA OR ITS OFFICERS OR AGENTS SHALL NOT BE RESPONSIBLE FOR THE ACCURACY OR COMPLETENESS OF SCANNED COPIES OF THIS PLAN SHEET.

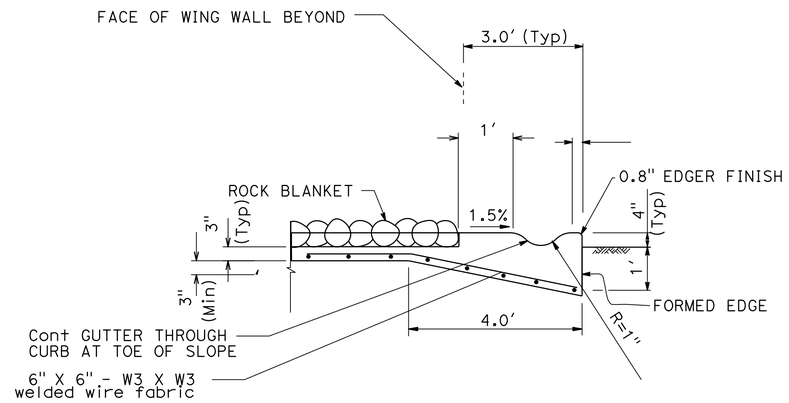

SECTION C - C

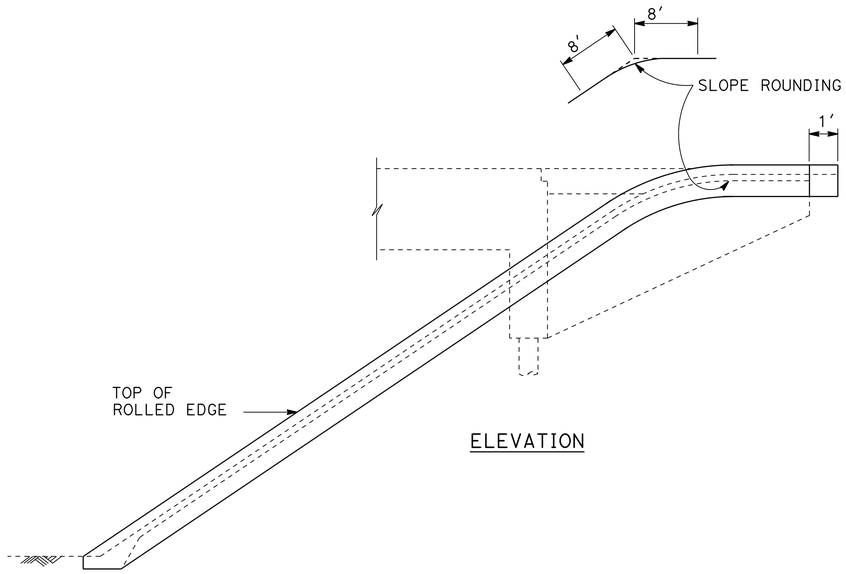

ELEVATION

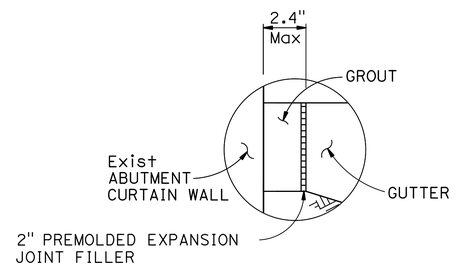

DETAIL "A"

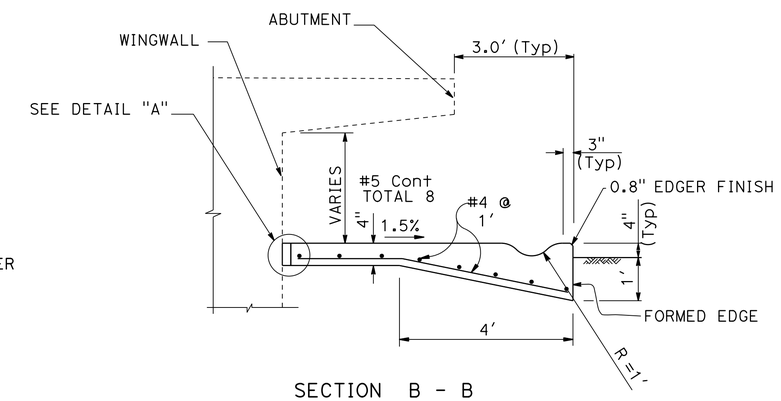

SECTION B - B

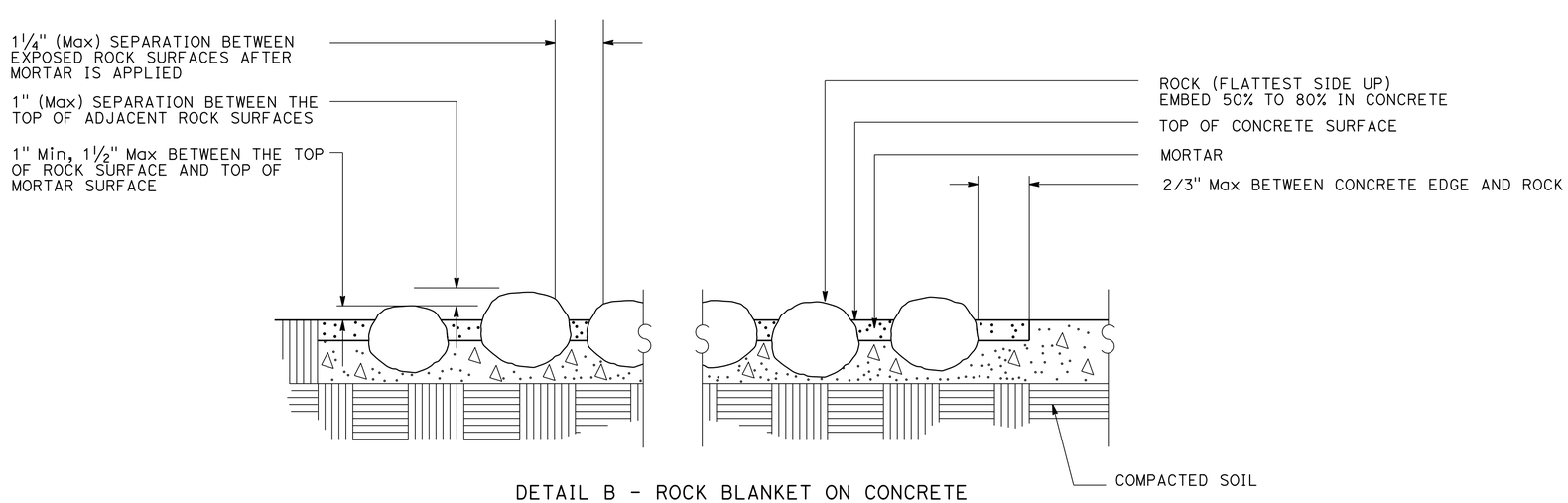

DETAIL B - ROCK BLANKET ON CONCRETE

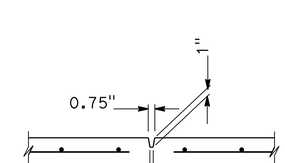

PREFORMED GROOVE

CONSTRUCTION DETAILS

NO SCALE

C-2

STATE OF CALIFORNIA - DEPARTMENT OF TRANSPORTATION

Caltrans® OFFICE OF DESIGN D

FUNCTIONAL SUPERVISOR: KAREN FONG

CALCULATED-DESIGNED BY: NARENDRA DESAI

CHECKED BY: REFUGIO DOMINGUEZ

REVISED BY

DATE REVISED

LAST REVISION 10-09-12

DATE PLOTTED => 02-JAN-2013

TIME PLOTTED => 19:23

Dist	COUNTY	ROUTE	POST MILES TOTAL PROJECT	SHEET No.	TOTAL SHEETS
07	LA	5,10,14, 47,60,etc.	Var	22	72

REGISTERED CIVIL ENGINEER 8-30-12 DATE

PLANS APPROVAL DATE

REGISTERED PROFESSIONAL ENGINEER REFUGIO DOMINGUEZ No. 50820 Exp. 9-30-13 CIVIL STATE OF CALIFORNIA

THE STATE OF CALIFORNIA OR ITS OFFICERS OR AGENTS SHALL NOT BE RESPONSIBLE FOR THE ACCURACY OR COMPLETENESS OF SCANNED COPIES OF THIS PLAN SHEET.

NOTES:

1. FOR ACCURATE RIGHT OF WAY AND ACCESS DATA, CONTACT RIGHT OF WAY ENGINEERING AT THE DISTRICT OFFICE.
2. THE EXISTING UTILITY FACILITIES HAVE NOT BEEN PLOTTED ON THESE PLANS.

CURVE DATA

No.	R	Δ	T	L
1	50.00′	24°49′58″	11.01′	21.70′

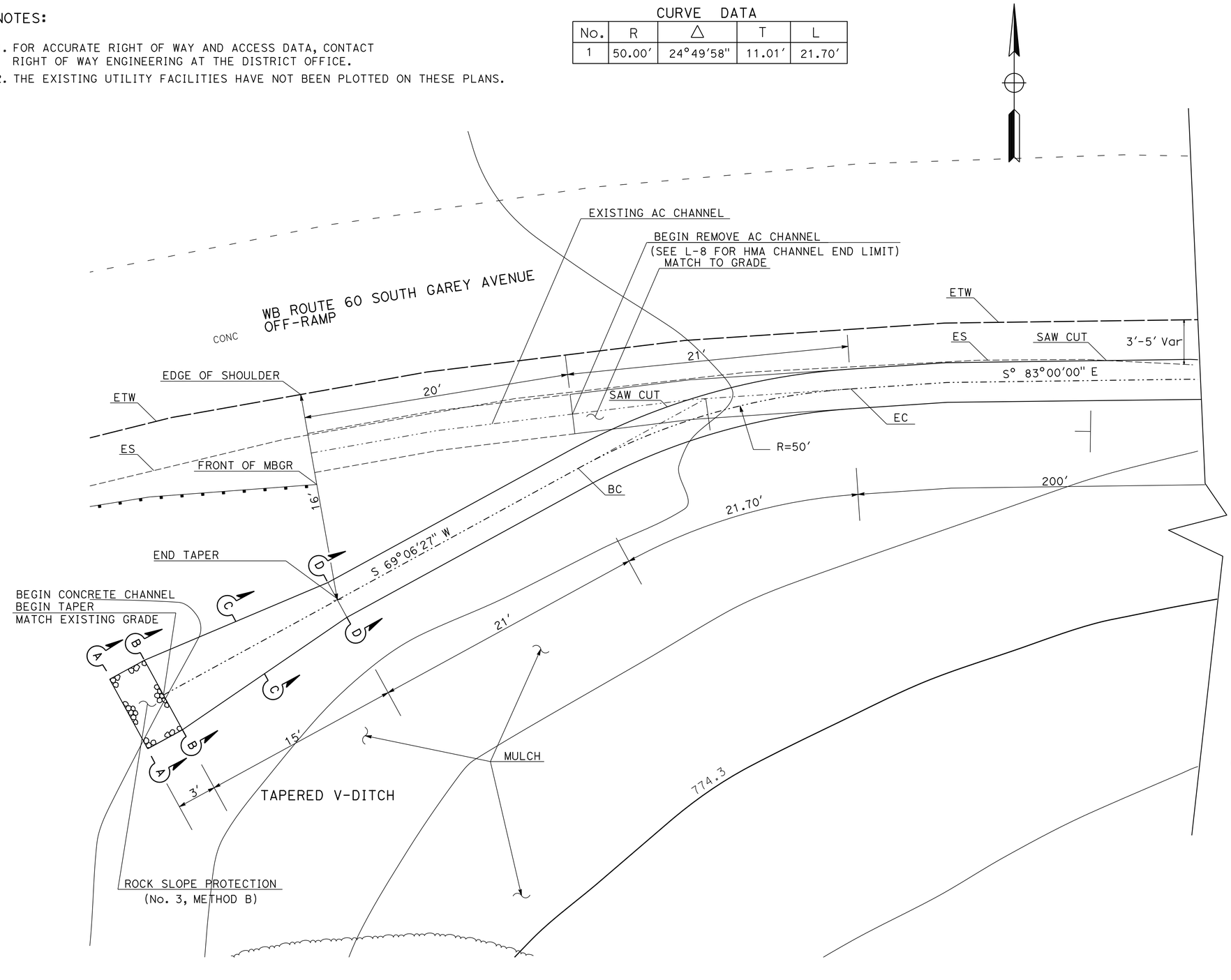

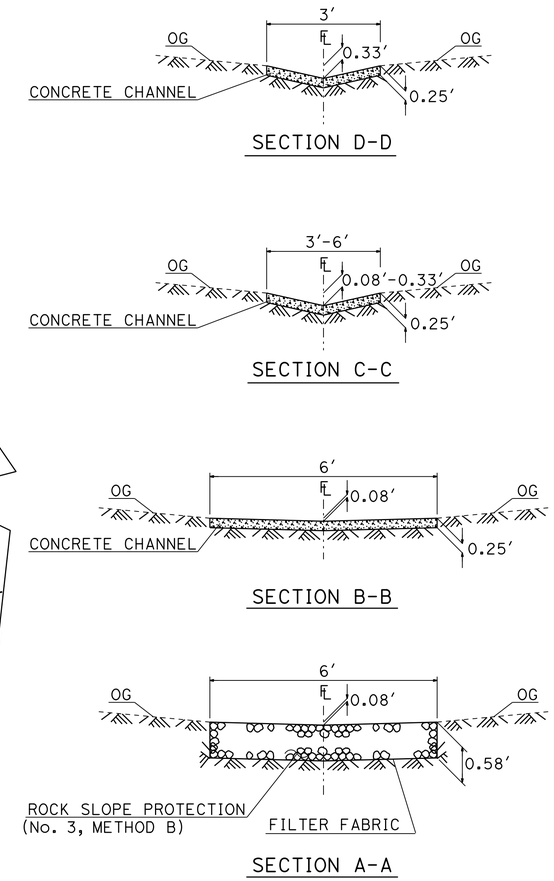

LOCATION No. 8

ON WB ROUTE 60 AT GAREY Ave OFF-RAMP

CONSTRUCTION DETAILS

NO SCALE

C-3

STATE OF CALIFORNIA - DEPARTMENT OF TRANSPORTATION
Caltrans® OFFICE OF DESIGN D

FUNCTIONAL SUPERVISOR: KAREN FONG

CALCULATED-DESIGNED BY: MOHAMMAD MOHSENZADEH
CHECKED BY: REFUGIO DOMINGUEZ

REVISED BY
DATE REVISED

LAST REVISION 10-09-12
DATE PLOTTED => 02-JAN-2013
TIME PLOTTED => 19:23

Dist	COUNTY	ROUTE	POST MILES TOTAL PROJECT	SHEET No.	TOTAL SHEETS
07	LA	5,10,14, 47,60,etc.	Var	23	72

REGISTERED CIVIL ENGINEER 8-30-12 DATE

PLANS APPROVAL DATE

REGISTERED PROFESSIONAL ENGINEER REFUGIO DOMINGUEZ No. 50820 Exp. 9-30-13 CIVIL STATE OF CALIFORNIA

THE STATE OF CALIFORNIA OR ITS OFFICERS OR AGENTS SHALL NOT BE RESPONSIBLE FOR THE ACCURACY OR COMPLETENESS OF SCANNED COPIES OF THIS PLAN SHEET.

TYPICAL STRUCTURAL SECTION

1 0.50′ CTPB
0.50′ CLASS D AB

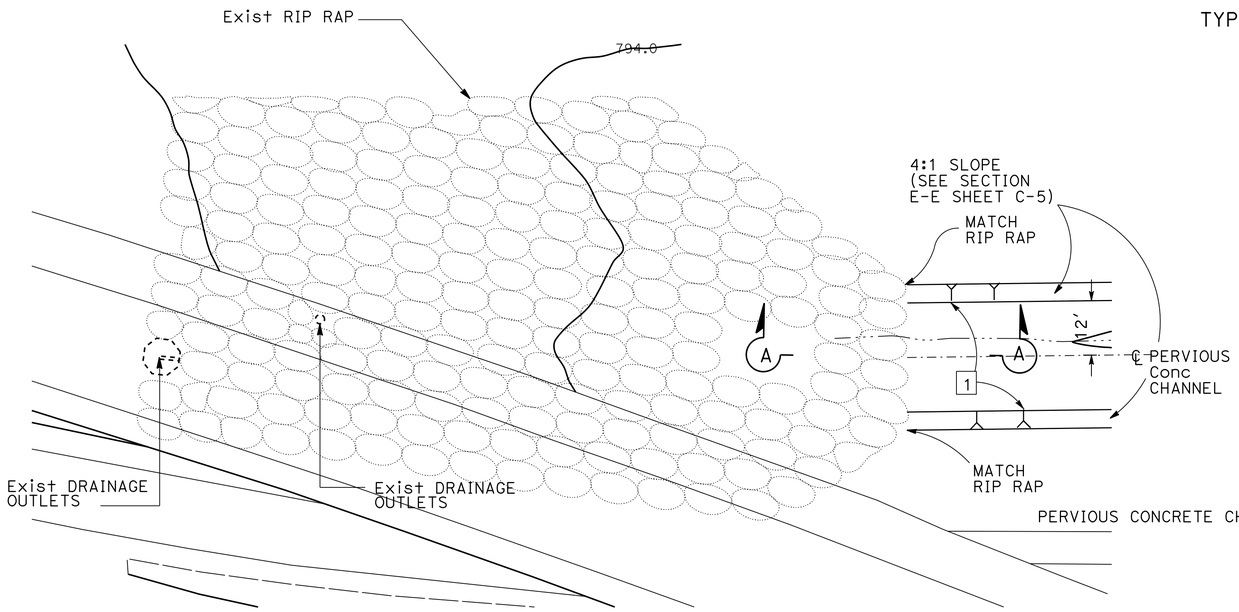

DETAIL A

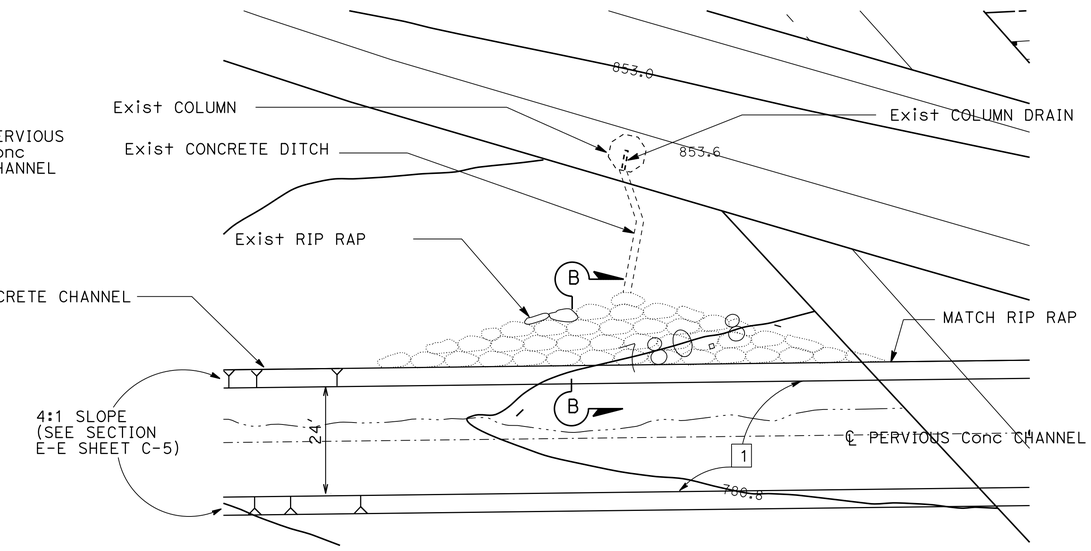

DETAIL B

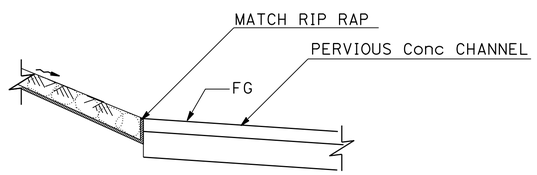

SECTION A-A

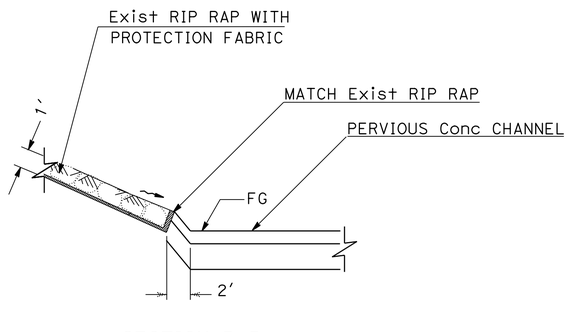

SECTION B-B

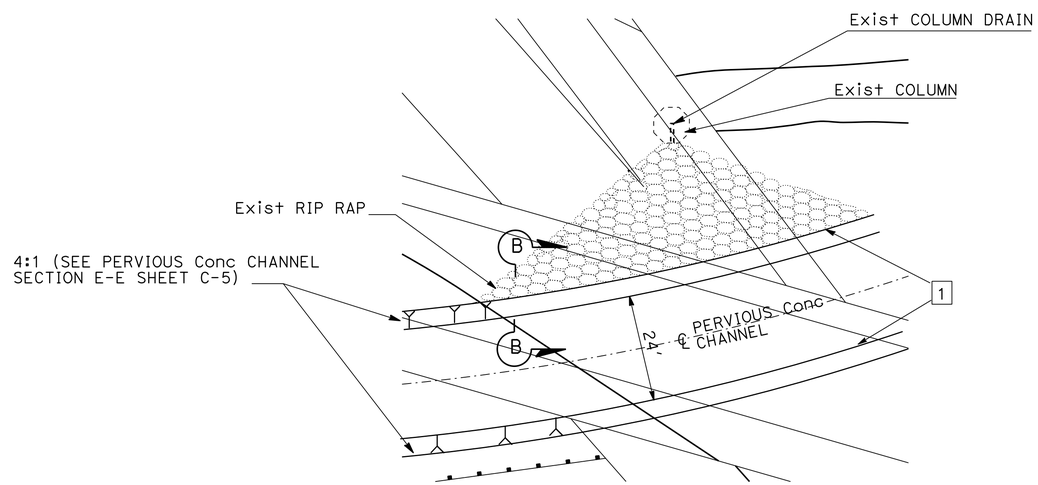

DETAIL C

LOCATION NO. 9

CONSTRUCTION DETAILS

NO SCALE

C-4

STATE OF CALIFORNIA - DEPARTMENT OF TRANSPORTATION
Caltrans® OFFICE OF DESIGN D

FUNCTIONAL SUPERVISOR: KAREN FONG
CALCULATED-DESIGNED BY: NGUYEN HUA
CHECKED BY: REFUGIO DOMINGUEZ
REVISED BY
DATE REVISED

LAST REVISION 10-09-12
DATE PLOTTED => 02-JAN-2013
TIME PLOTTED => 19:23

Dist	COUNTY	ROUTE	POST MILES TOTAL PROJECT	SHEET No.	TOTAL SHEETS
07	LA	5,10,14, 47,60,etc.	Var	24	72

REGISTERED CIVIL ENGINEER 8-30-12 DATE

PLANS APPROVAL DATE

REGISTERED PROFESSIONAL ENGINEER REFUGIO DOMINGUEZ No. 50820 Exp. 9-30-13 CIVIL STATE OF CALIFORNIA

THE STATE OF CALIFORNIA OR ITS OFFICERS OR AGENTS SHALL NOT BE RESPONSIBLE FOR THE ACCURACY OR COMPLETENESS OF SCANNED COPIES OF THIS PLAN SHEET.

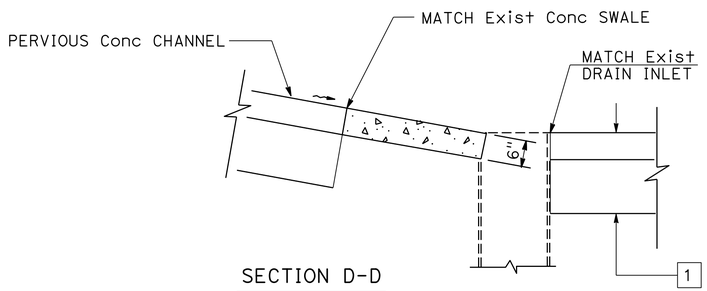

SECTION D-D

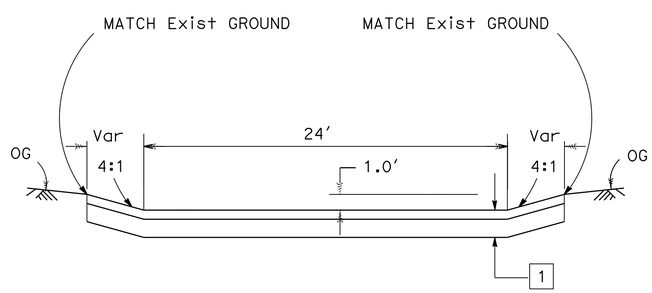

SECTION E-E

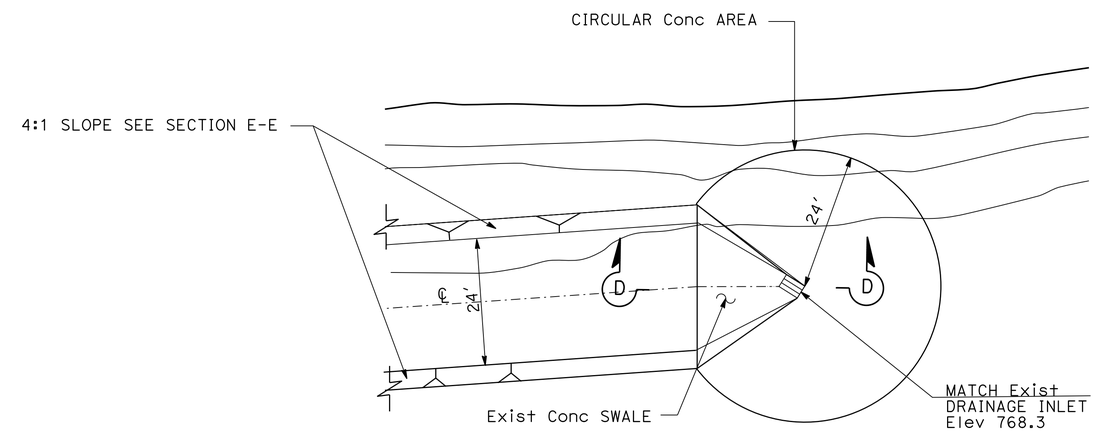

DETAIL D

LOCATION NO. 9

CONSTRUCTION DETAILS

NO SCALE

C-5

STATE OF CALIFORNIA - DEPARTMENT OF TRANSPORTATION

OFFICE OF DESIGN D

FUNCTIONAL SUPERVISOR: KAREN FONG

CALCULATED-DESIGNED BY: NGUYEN HUA

CHECKED BY: REFUGIO DOMINGUEZ

REVISED BY

DATE REVISED

LAST REVISION 10-09-12

DATE PLOTTED => 02-JAN-2013

TIME PLOTTED => 19:23

Dist	COUNTY	ROUTE	POST MILES TOTAL PROJECT	SHEET No.	TOTAL SHEETS
07	LA	5,10,14, 47,60,etc.	Var	25	72

REGISTERED CIVIL ENGINEER 8-30-12 DATE

PLANS APPROVAL DATE

REGISTERED PROFESSIONAL ENGINEER REFUGIO DOMINGUEZ No. 50820 Exp. 9-30-13 CIVIL STATE OF CALIFORNIA

THE STATE OF CALIFORNIA OR ITS OFFICERS OR AGENTS SHALL NOT BE RESPONSIBLE FOR THE ACCURACY OR COMPLETENESS OF SCANNED COPIES OF THIS PLAN SHEET.

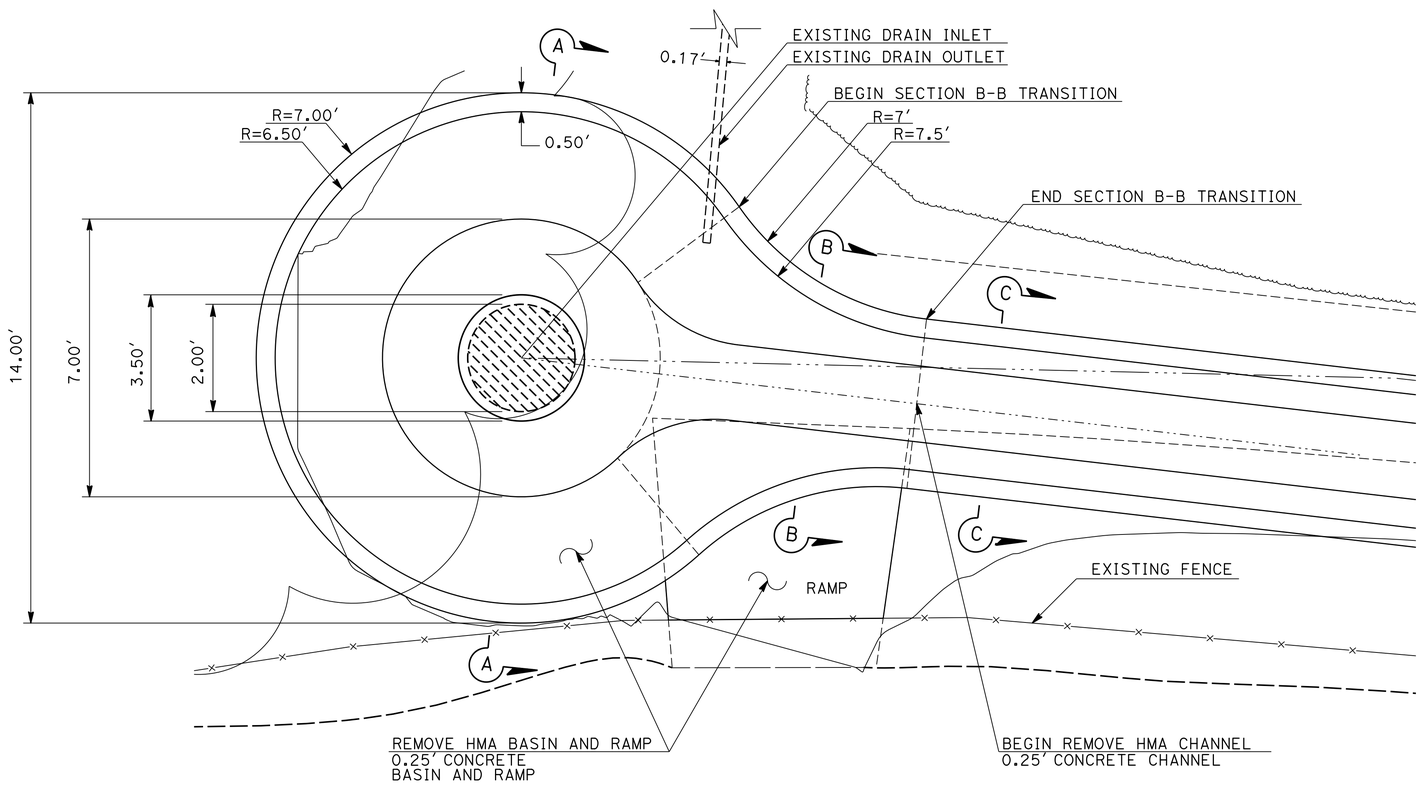

PARK AND RIDE
DRAIN INLET

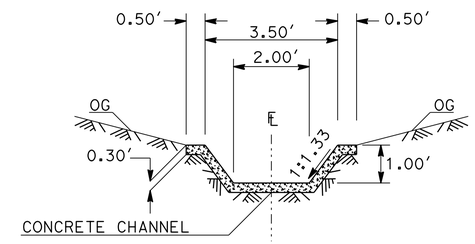

SECTION C-C

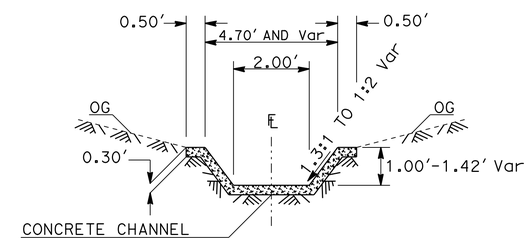

SECTION B-B

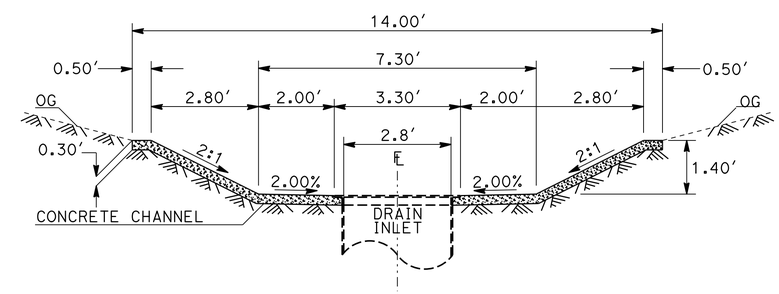

SECTION A-A

LOCATION NO. 9

PARK & RIDE AREA BETWEEN NB ROUTE 57 AND WB ROUTE 60

CONSTRUCTION DETAILS

NO SCALE

C-6

STATE OF CALIFORNIA - DEPARTMENT OF TRANSPORTATION
Caltrans® OFFICE OF DESIGN D

FUNCTIONAL SUPERVISOR: KAREN FONG
CALCULATED-DESIGNED BY: MOHAMMAD MOHSENZADEH
CHECKED BY: REFUGIO DOMINGUEZ
REVISED BY
DATE REVISED

LAST REVISION 10-09-12
DATE PLOTTED => 02-JAN-2013
TIME PLOTTED => 19:23

Dist	COUNTY	ROUTE	POST MILES TOTAL PROJECT	SHEET No.	TOTAL SHEETS
07	LA	5,10,14, 47,60,etc.	Var	26	72

REGISTERED CIVIL ENGINEER 8-30-12 DATE

PLANS APPROVAL DATE

REGISTERED PROFESSIONAL ENGINEER REFUGIO DOMINGUEZ No. 50820 Exp. 9-30-13 CIVIL STATE OF CALIFORNIA

THE STATE OF CALIFORNIA OR ITS OFFICERS OR AGENTS SHALL NOT BE RESPONSIBLE FOR THE ACCURACY OR COMPLETENESS OF SCANNED COPIES OF THIS PLAN SHEET.

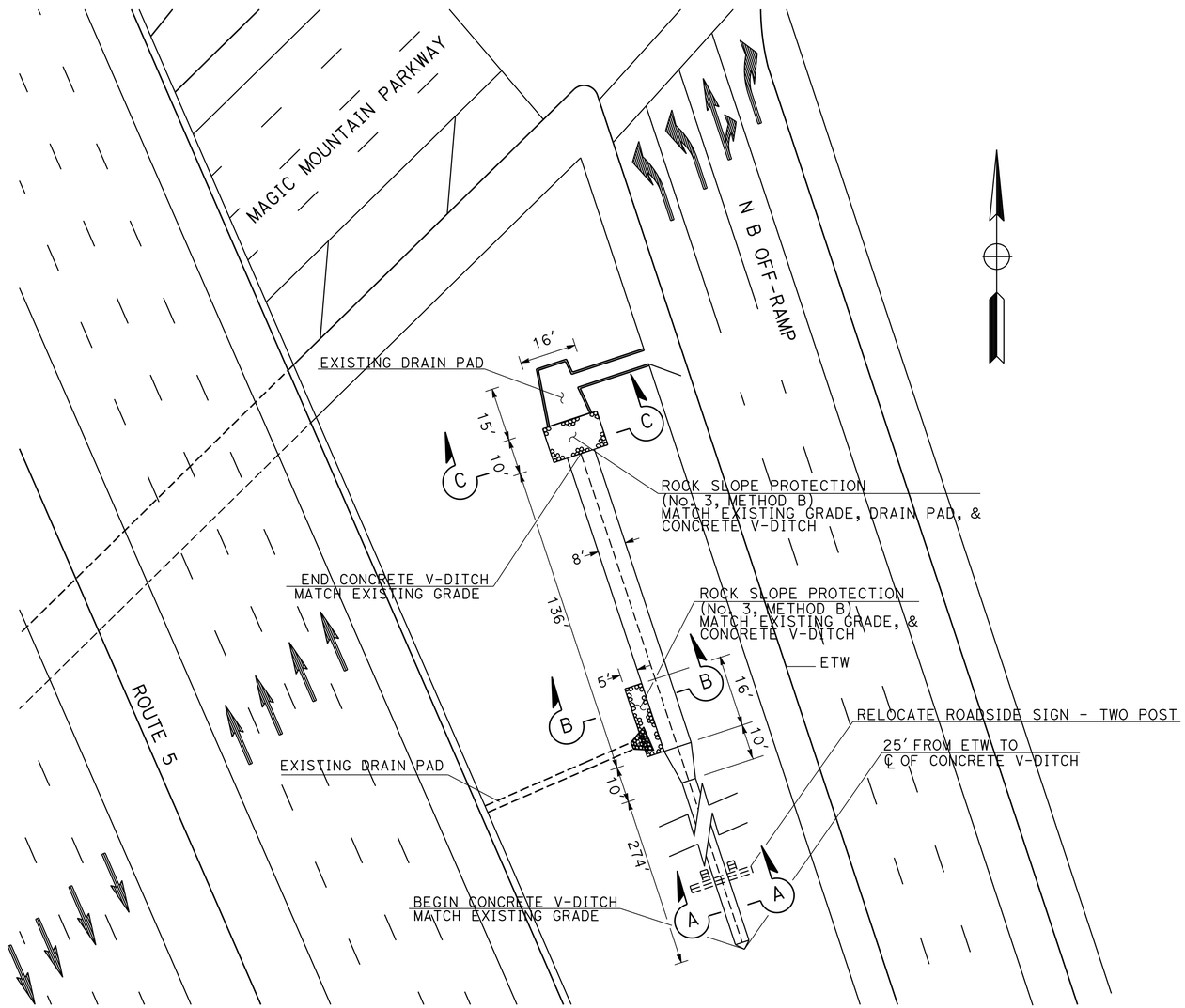

LOCATION No. 1

ON ROUTE 5 AT MAGIC MOUNTAIN PARKWAY OFF-RAMPS

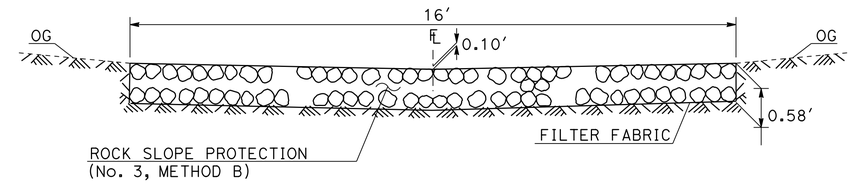

SECTION C-C

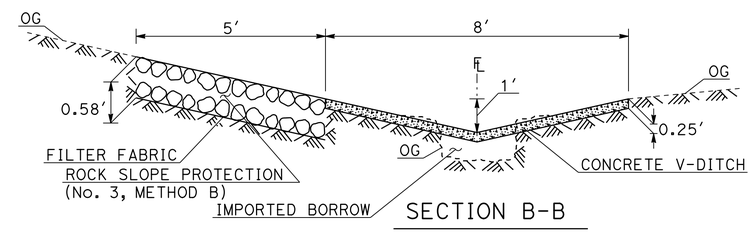

SECTION B-B

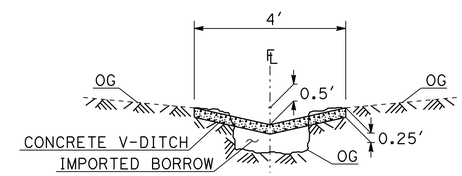

SECTION A-A

CONSTRUCTION DETAILS

NO SCALE

C-7

STATE OF CALIFORNIA - DEPARTMENT OF TRANSPORTATION
Caltrans® OFFICE OF DESIGN D

FUNCTIONAL SUPERVISOR: KAREN FONG
CALCULATED-DESIGNED BY: MOHAMMAD MOHSENZADEH
CHECKED BY: REFUGIO DOMINGUEZ
REVISED BY
DATE REVISED

LAST REVISION 10-09-12
DATE PLOTTED => 02-JAN-2013
TIME PLOTTED => 19:23

Dist	COUNTY	ROUTE	POST MILES TOTAL PROJECT	SHEET No.	TOTAL SHEETS
07	LA	5,10,14, 47,60,etc.	Var	27	72

REGISTERED CIVIL ENGINEER 8-30-12 DATE

PLANS APPROVAL DATE

REGISTERED PROFESSIONAL ENGINEER REFUGIO DOMINGUEZ No. 50820 Exp. 9-30-13 CIVIL STATE OF CALIFORNIA

THE STATE OF CALIFORNIA OR ITS OFFICERS OR AGENTS SHALL NOT BE RESPONSIBLE FOR THE ACCURACY OR COMPLETENESS OF SCANNED COPIES OF THIS PLAN SHEET.

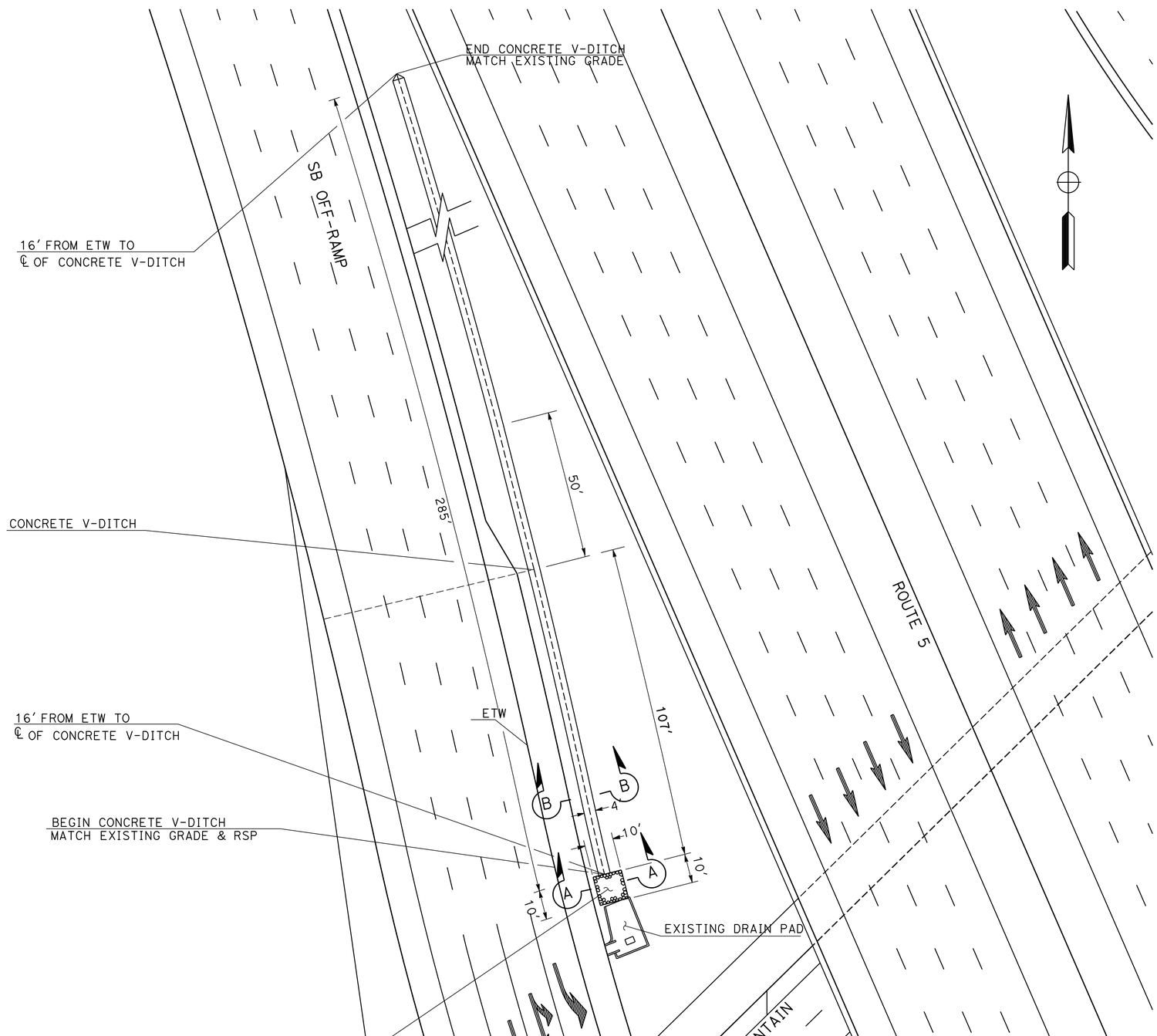

LOCATION NO. 1

ON ROUTE 5 AT MAGIC MOUNTAIN PARKWAY OFF-RAMPS

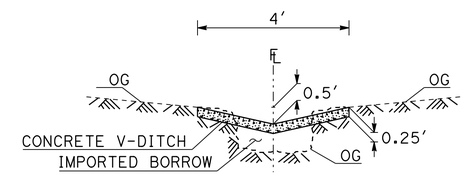

SECTION B-B

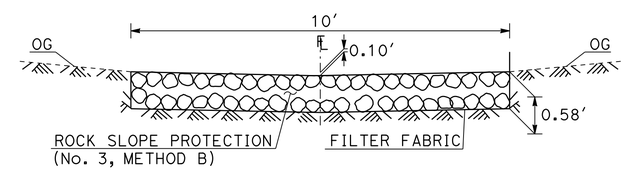

SECTION A-A

CONSTRUCTION DETAILS

NO SCALE

C-8

STATE OF CALIFORNIA - DEPARTMENT OF TRANSPORTATION
Caltrans OFFICE OF DESIGN D

FUNCTIONAL SUPERVISOR: KAREN FONG

CALCULATED-DESIGNED BY: MOHAMMAD MOHSENZADEH
CHECKED BY: REFUGIO DOMINGUEZ

REVISED BY
DATE REVISED

LAST REVISION 10-09-12
DATE PLOTTED => 02-JAN-2013
TIME PLOTTED => 19:23

Dist	COUNTY	ROUTE	POST MILES TOTAL PROJECT	SHEET No.	TOTAL SHEETS
07	LA	5,10,14, 47,60,etc.	Var	28	72

REGISTERED CIVIL ENGINEER 8-30-12 DATE

PLANS APPROVAL DATE

REGISTERED PROFESSIONAL ENGINEER REFUGIO DOMINGUEZ No. 50820 Exp. 9-30-13 CIVIL STATE OF CALIFORNIA

THE STATE OF CALIFORNIA OR ITS OFFICERS OR AGENTS SHALL NOT BE RESPONSIBLE FOR THE ACCURACY OR COMPLETENESS OF SCANNED COPIES OF THIS PLAN SHEET.

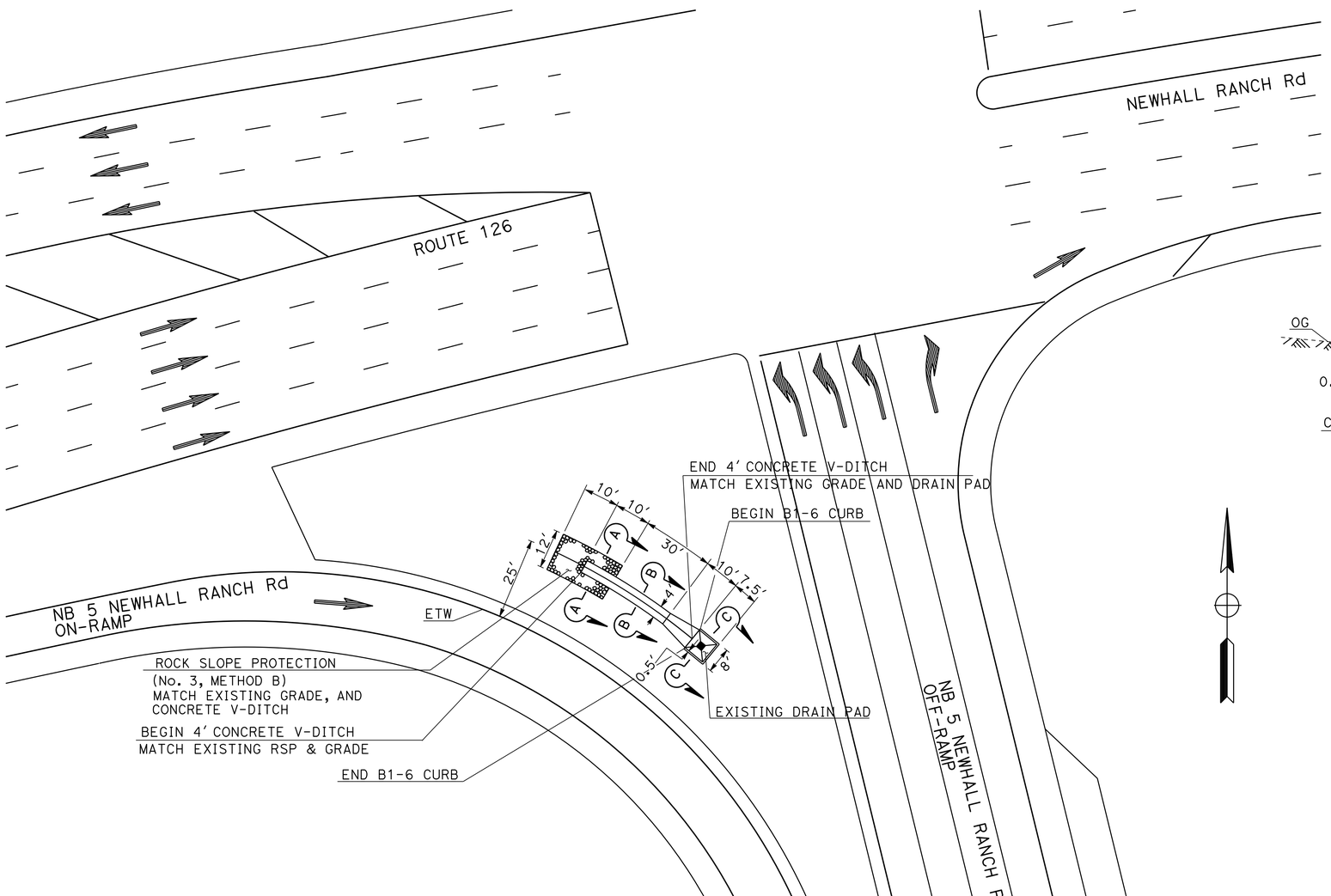

LOCATION No. 2

ON ROUTE 5 AT ROUTE 126 SEPARATION

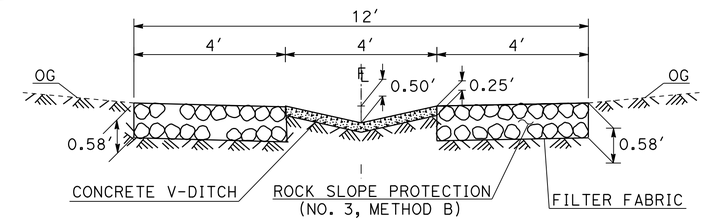

SECTION A-A

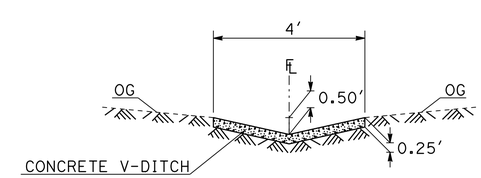

SECTION B-B

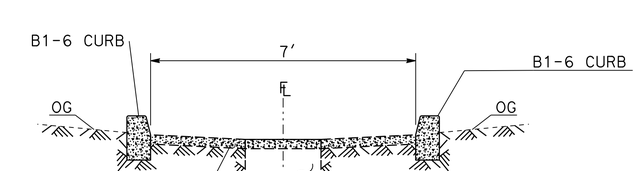

SECTION C-C

CONSTRUCTION DETAILS

NO SCALE

C-9

REVISED BY	DATE REVISED

CALCULATED-DESIGNED BY	CHECKED BY
MOHAMMAD MOHSENZADEH	REFUGIO DOMINGUEZ

FUNCTIONAL SUPERVISOR: KAREN FONG

STATE OF CALIFORNIA - DEPARTMENT OF TRANSPORTATION

Caltrans® OFFICE OF DESIGN D

LAST REVISION 10-09-12 | DATE PLOTTED => 02-JAN-2013 | TIME PLOTTED => 19:23

Dist	COUNTY	ROUTE	POST MILES TOTAL PROJECT	SHEET No.	TOTAL SHEETS
07	LA	5,10,14, 47,60,etc.	Var	29	72

REGISTERED CIVIL ENGINEER 8-30-12 DATE

PLANS APPROVAL DATE

REGISTERED PROFESSIONAL ENGINEER REFUGIO DOMINGUEZ No. 50820 Exp. 9-30-13 CIVIL STATE OF CALIFORNIA

THE STATE OF CALIFORNIA OR ITS OFFICERS OR AGENTS SHALL NOT BE RESPONSIBLE FOR THE ACCURACY OR COMPLETENESS OF SCANNED COPIES OF THIS PLAN SHEET.

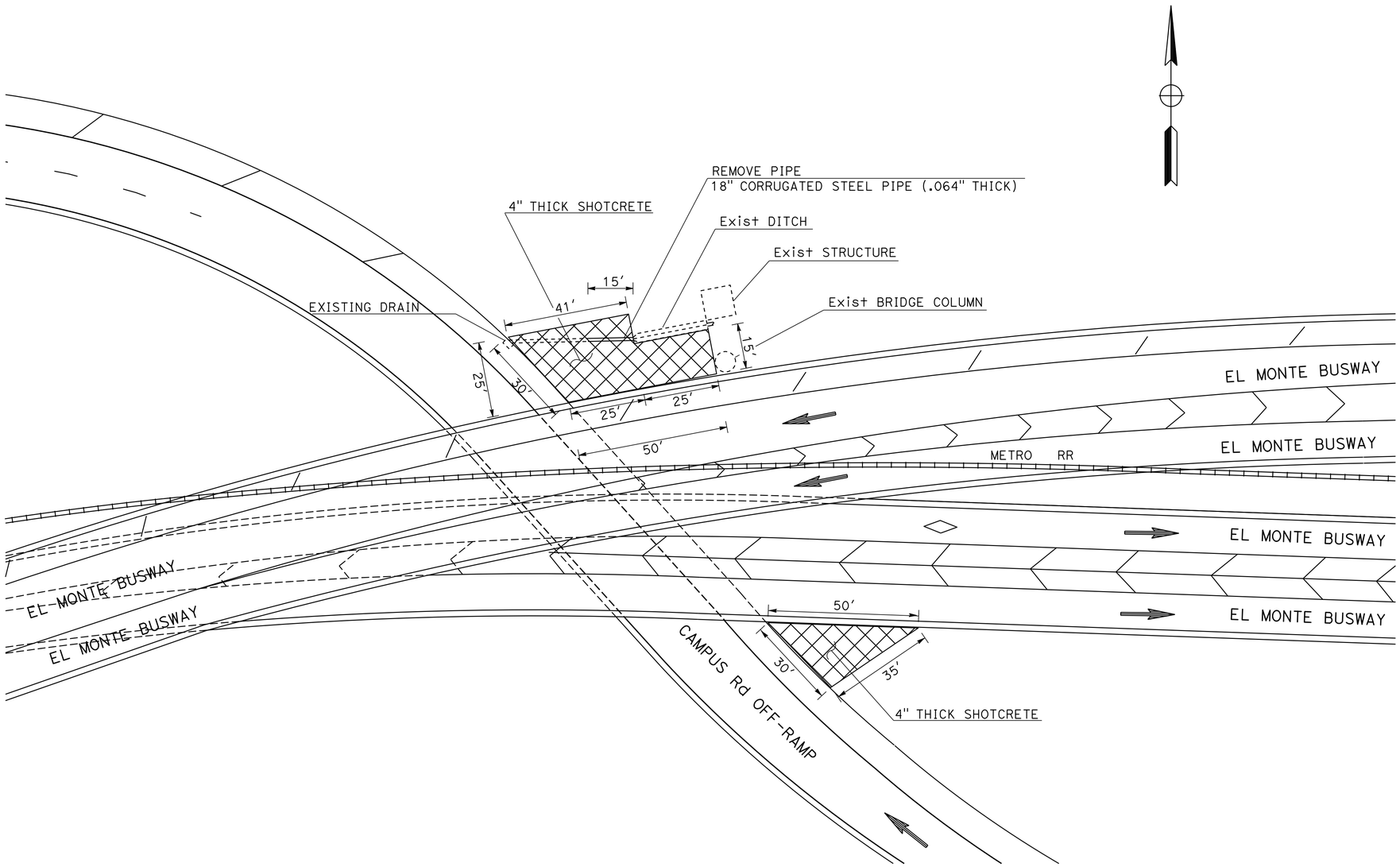

LOCATION No. 3

ON WB 10 AT EASTERN Ave OFF-RAMP

CONSTRUCTION DETAILS

NO SCALE **C-10**

STATE OF CALIFORNIA - DEPARTMENT OF TRANSPORTATION
Caltrans® OFFICE OF DESIGN D

FUNCTIONAL SUPERVISOR: KAREN FONG

CALCULATED-DESIGNED BY: MOHAMMAD MOHSENZADEH
CHECKED BY: REFUGIO DOMINGUEZ

REVISED BY
DATE REVISED

LAST REVISION 10-09-12
DATE PLOTTED => 02-JAN-2013
TIME PLOTTED => 19:23

Dist	COUNTY	ROUTE	POST MILES TOTAL PROJECT	SHEET No.	TOTAL SHEETS
07	LA	5,10,14 47,60,etc.	Var	30	72

REGISTERED CIVIL ENGINEER 8-30-12 DATE

PLANS APPROVAL DATE

REGISTERED PROFESSIONAL ENGINEER REFUGIO DOMINGUEZ No. 50820 Exp. 9-30-13 CIVIL STATE OF CALIFORNIA

THE STATE OF CALIFORNIA OR ITS OFFICERS OR AGENTS SHALL NOT BE RESPONSIBLE FOR THE ACCURACY OR COMPLETENESS OF SCANNED COPIES OF THIS PLAN SHEET.

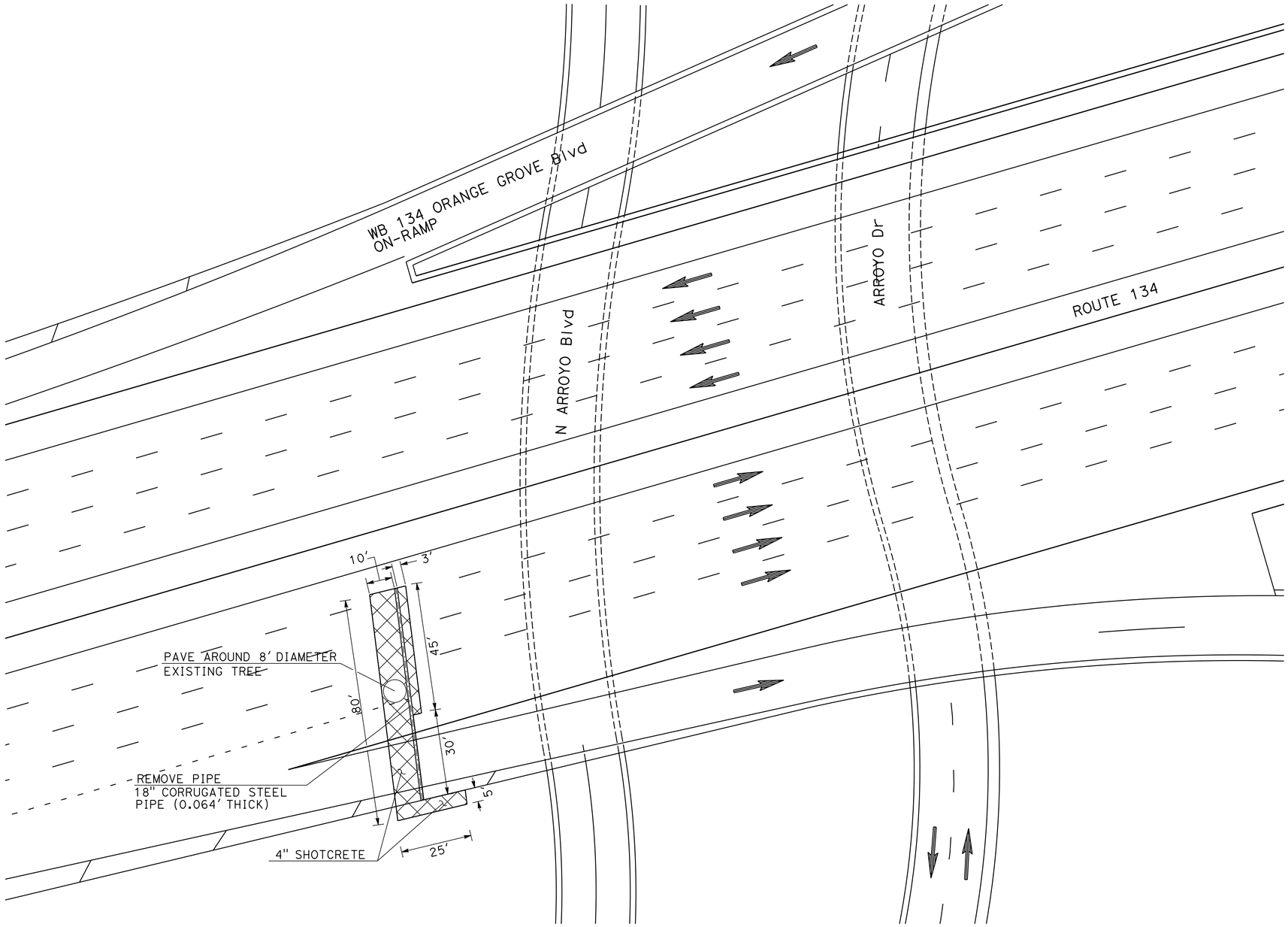

LOCATION No. 12

ON EB ROUTE 134 AT ARROYO SECO SEPARATION

CONSTRUCTION DETAILS

NO SCALE

C-11

STATE OF CALIFORNIA - DEPARTMENT OF TRANSPORTATION

Caltrans® **OFFICE OF DESIGN D**

FUNCTIONAL SUPERVISOR: KAREN FONG

CALCULATED-DESIGNED BY: MOHAMMAD MOHSENZADEH

CHECKED BY: REFUGIO DOMINGUEZ

REVISED BY

DATE REVISED

LAST REVISION 10-09-12

DATE PLOTTED => 02-JAN-2013

TIME PLOTTED => 19:23

BORDER LAST REVISED 7/2/2010

USERNAME => s125624

DGN FILE => 725880ga011.dgn

RELATIVE BORDER SCALE IS IN INCHES 0 1 2 3

UNIT 1819

PROJECT NUMBER & PHASE 07000201951

Dist	COUNTY	ROUTE	POST MILES TOTAL PROJECT	SHEET No.	TOTAL SHEETS
07	LA	5,10,14 47,60, etc.	Var	31	72

N. Celina Aviles 8/30/12
REGISTERED CIVIL ENGINEER DATE

10-22-12
PLANS APPROVAL DATE

REGISTERED PROFESSIONAL ENGINEER N. CELINA AVILES No. 57106 Exp. 12/31/13 CIVIL STATE OF CALIFORNIA

THE STATE OF CALIFORNIA OR ITS OFFICERS OR AGENTS SHALL NOT BE RESPONSIBLE FOR THE ACCURACY OR COMPLETENESS OF SCANNED COPIES OF THIS PLAN SHEET.

NOTES:

1. FOR ACCURATE RIGHT OF WAY AND ACCESS DATA, CONTACT RIGHT OF WAY ENGINEERING AT THE DISTRICT OFFICE.
2. LOCATIONS OF UTILITY FACILITIES SHOWN ARE APPROXIMATE AND SHALL BE VERIFIED BY THE CONTRACTOR PRIOR TO CONSTRUCTION.

ABBREVIATIONS:

ACD = ASBESTOS CEMENT DUCT
CI = CAST IRON
CEM = CEMENT CONDUCT
MCD = MULTIPLE CONCRETE DUCT
PT&T = PACIFIC TELEPHONE AND TELEGRAPH COMPANY
PWC = PARK WATER COMPANY
SCG = SOUTHERN CALIFORNIA GAS COMPANY
M = MEDIUM PRESURE

LEGEND:

SLOPE PAVING (CONCRETE)

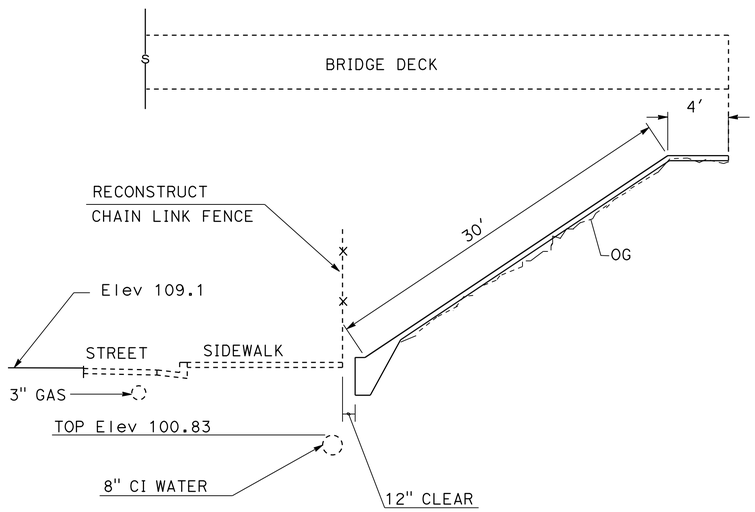

SECTION A-A
NO SCALE

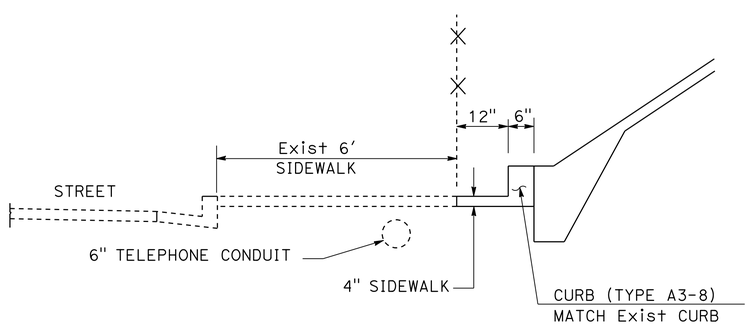

SECTION B-B
SIDEWALK/CURB DETAIL
NORTH SIDE ABUTMENT
NO SCALE

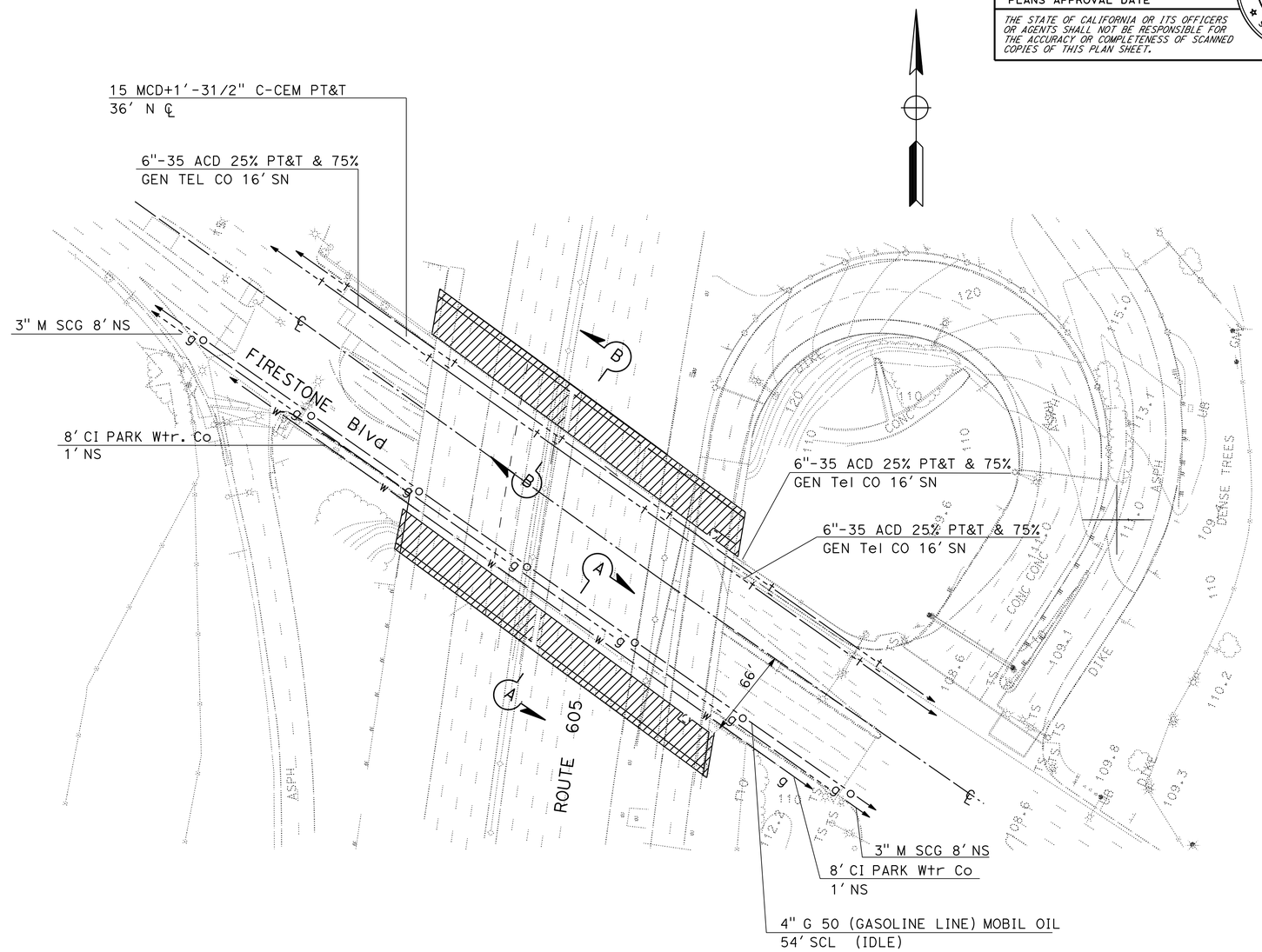

LOCATION No. 16

Rte 605 NB AT FIRESTONE Blvd
PM 8.4

UTILITY PLAN

SCALE: 1" = 50'

U-1

APPROVED FOR UTILITY INFORMATION ONLY.

STATE OF CALIFORNIA - DEPARTMENT OF TRANSPORTATION
Caltrans® OFFICE OF DESIGN D

FUNCTIONAL SUPERVISOR: KAREN FONG
CALCULATED-DESIGNED BY: NARENDRA DESAI
CHECKED BY: REFUGIO DOMINGUEZ
REVISED BY
DATE REVISED

LAST REVISION 00-00-00
DATE PLOTTED => 02-JAN-2013
TIME PLOTTED => 19:23

Dist	COUNTY	ROUTE	POST MILES TOTAL PROJECT	SHEET No.	TOTAL SHEETS
07	LA	5,10,14, 47,60,etc.	Var	32	72

N. Celina Aviles 8/30/12
REGISTERED CIVIL ENGINEER DATE

10-22-12
PLANS APPROVAL DATE

REGISTERED PROFESSIONAL ENGINEER N. CELINA AVILES No. 57106 Exp. 12/31/13 CIVIL STATE OF CALIFORNIA

THE STATE OF CALIFORNIA OR ITS OFFICERS OR AGENTS SHALL NOT BE RESPONSIBLE FOR THE ACCURACY OR COMPLETENESS OF SCANNED COPIES OF THIS PLAN SHEET.

NOTES:

1. FOR ACCURATE RIGHT OF WAY AND ACCESS DATA, CONTACT RIGHT OF WAY ENGINEERING AT THE DISTRICT OFFICE.
2. LOCATIONS OF UTILITY FACILITIES SHOWN ARE APPROXIMATE AND SHALL BE VERIFIED BY THE CONTRACTOR PRIOR TO CONSTRUCTION
3. DURING CONSTRUCTION, THE CONTRACTOR WILL PROTECT THE OVERHEAD LINES FROM CONSTRUCTION EQUIPMENT.

LEGEND:

SLOPE PAVING (CONCRETE)

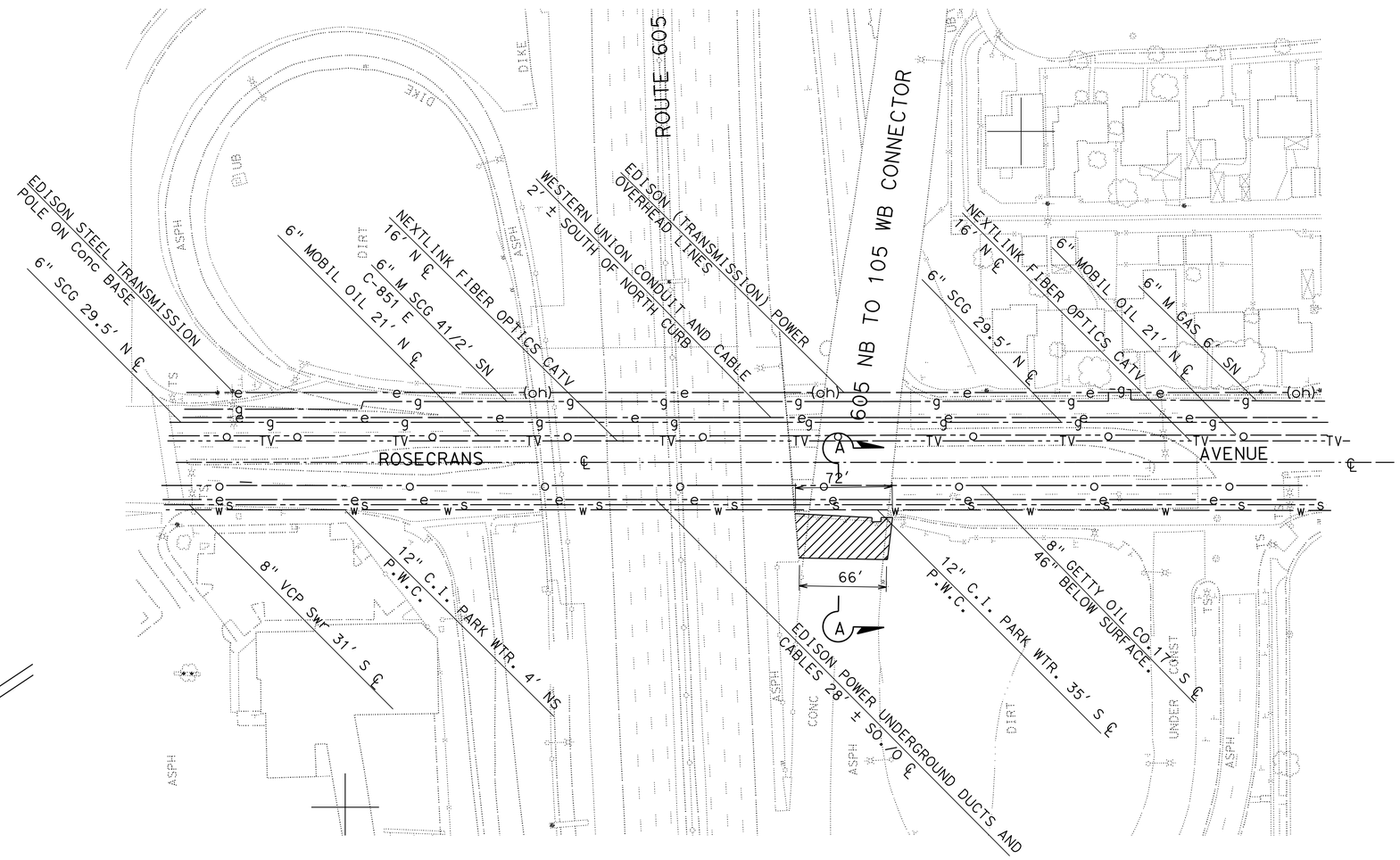

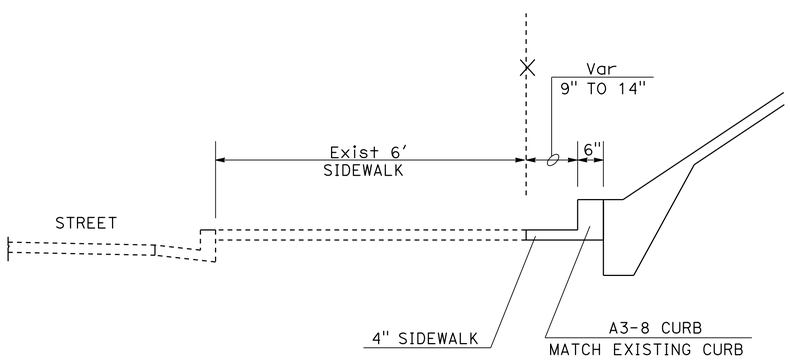

SECTION A-A
SIDEWALK/CURB DETAIL
NO SCALE

LOCATION No. 17

Rte 605 NB AT ROSECRANS AVENUE
PM 6.8

UTILITY PLAN

SCALE: 1"=50'

U-2

APPROVED FOR UTILITY INFORMATION ONLY.

STATE OF CALIFORNIA - DEPARTMENT OF TRANSPORTATION
Caltrans® OFFICE OF DESIGN D

FUNCTIONAL SUPERVISOR: KAREN FONG
CALCULATED-DESIGNED BY: NARENDRA DESAI
CHECKED BY: REFUGIO DOMINGUEZ
REVISED BY
DATE REVISED

LAST REVISION 00-00-00
DATE PLOTTED => 02-JAN-2013
TIME PLOTTED => 19:23

Dist	COUNTY	ROUTE	POST MILES TOTAL PROJECT	SHEET No.	TOTAL SHEETS
07	LA	5,10,14, 47,60,etc.	Var	33	72

REGISTERED CIVIL ENGINEER 8-30-12 DATE

10-22-12
PLANS APPROVAL DATE

REGISTERED PROFESSIONAL ENGINEER REFUGIO DOMINGUEZ No. 50820 Exp. 9/30/13 CIVIL STATE OF CALIFORNIA

THE STATE OF CALIFORNIA OR ITS OFFICERS OR AGENTS SHALL NOT BE RESPONSIBLE FOR THE ACCURACY OR COMPLETENESS OF SCANNED COPIES OF THIS PLAN SHEET.

NOTES:

1. SIGN LOCATIONS SHOWN ARE APPROXIMATE. EXACT LOCATIONS WILL BE DETERMINED BY THE ENGINEER.
2. FOR ADDITIONAL CONSTRUCTION AREA SIGNS INFORMATION, SEE TRAFFIC HANDLING DETAILS.

STATIONARY MOUNTED CONSTRUCTION AREA SIGNS

SIGN No. (X)	SIGN CODE	PANEL SIZE	SIGN MESSAGE	POST No. & SIZE	No. OF SIGNS
A	C40(CA)	144" X 60"	TRAFFIC FINES DOUBLED IN CONSTRUCTION ZONES	2 - 6" X 6"	
B	W20-1	48" X 48"	ROAD WORK AHEAD	1 - 4" X 6"	
C	G20-2	48" X 24"	END ROAD WORK	1 - 4" X 6"	
D	C40(CA)	108" X 42"	TRAFFIC FINES DOUBLED IN CONSTRUCTION ZONES	1 - 4" X 6"	4
E	W20-1	36" X 36"	ROAD WORK AHEAD	1 - 4" X 6"	4
F	G20-2	36" X 18"	END ROAD WORK	1 - 4" X 6"	4
TOTAL					12

LOCATION 17

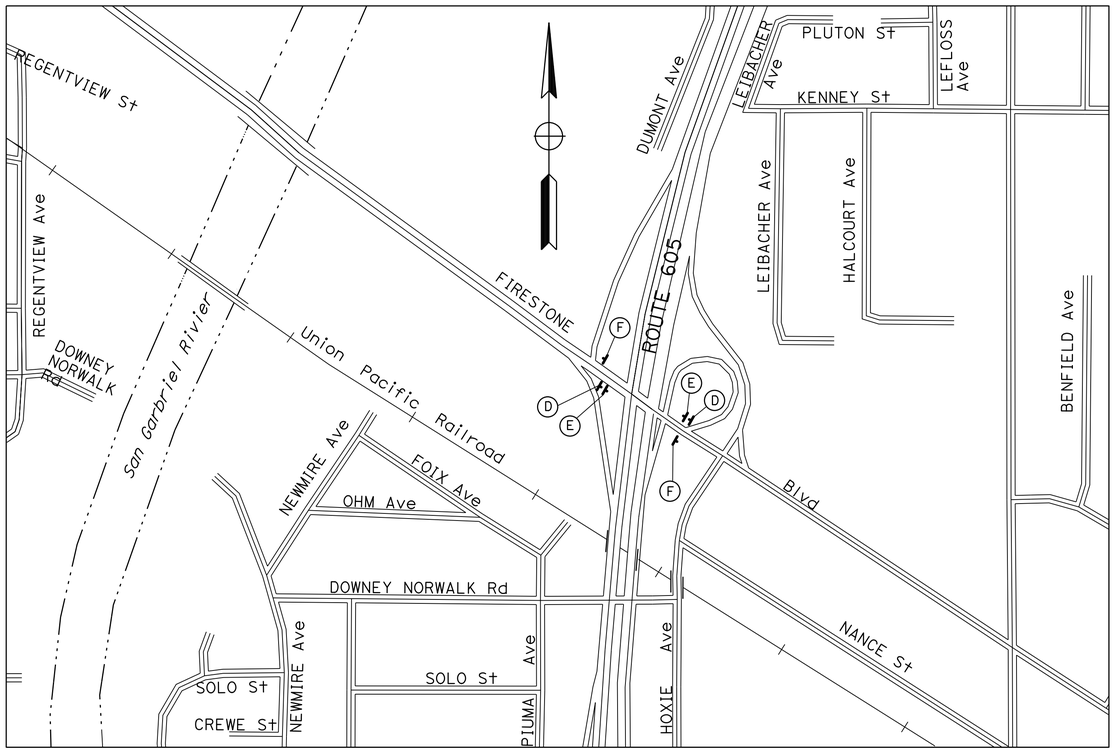

LOCATION 16

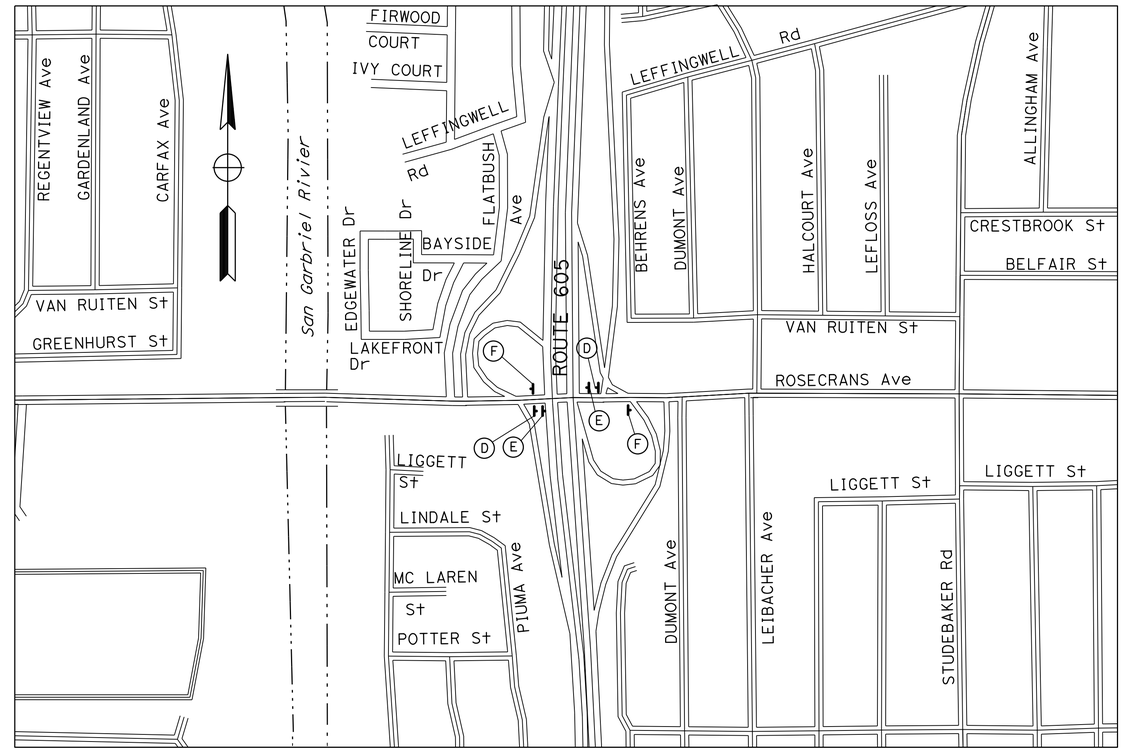

CONSTRUCTION AREA SIGNS

NO SCALE

CS-1

APPROVED FOR CONSTRUCTION AREA SIGNS WORK ONLY.

STATE OF CALIFORNIA - DEPARTMENT OF TRANSPORTATION
Caltrans® OFFICE OF DESIGN D

FUNCTIONAL SUPERVISOR: KAREN FONG
CALCULATED-DESIGNED BY: NARENDRA DESAI
CHECKED BY: REFUGIO DOMINGUEZ
REVISED BY
DATE REVISED

LAST REVISION 00-00-00
DATE PLOTTED => 02-JAN-2013
TIME PLOTTED => 19:23

Dist	COUNTY	ROUTE	POST MILES TOTAL PROJECT	SHEET No.	TOTAL SHEETS
07	LA	5,10,14, 47,60,etc.	Var	34	65

REGISTERED CIVIL ENGINEER 8-30-12 DATE

10-22-12
PLANS APPROVAL DATE

REGISTERED PROFESSIONAL ENGINEER REFUGIO DOMINGUEZ No. 50820 Exp. 9/30/13 CIVIL STATE OF CALIFORNIA

THE STATE OF CALIFORNIA OR ITS OFFICERS OR AGENTS SHALL NOT BE RESPONSIBLE FOR THE ACCURACY OR COMPLETENESS OF SCANNED COPIES OF THIS PLAN SHEET.

NOTES:

1. SIGN LOCATIONS SHOWN ARE APPROXIMATE. EXACT LOCATIONS WILL BE DETERMINED BY THE ENGINEER.
2. FOR ADDITIONAL CONSTRUCTION AREA SIGNS INFORMATION, SEE TRAFFIC HANDLING DETAILS.

STATIONARY MOUNTED CONSTRUCTION AREA SIGNS

SIGN No. (X)	SIGN CODE	PANEL SIZE	SIGN MESSAGE	POST No. & SIZE	No. OF SIGNS
A	C40(CA)	144" X 60"	TRAFFIC FINES DOUBLED IN CONSTRUCTION ZONES	2 - 6" X 6"	1
B	W20-1	48" X 48"	ROAD WORK AHEAD	1 - 4" X 6"	1
C	G20-2	48" X 24"	END ROAD WORK	1 - 4" X 6"	1
TOTAL					3

LOCATION 18

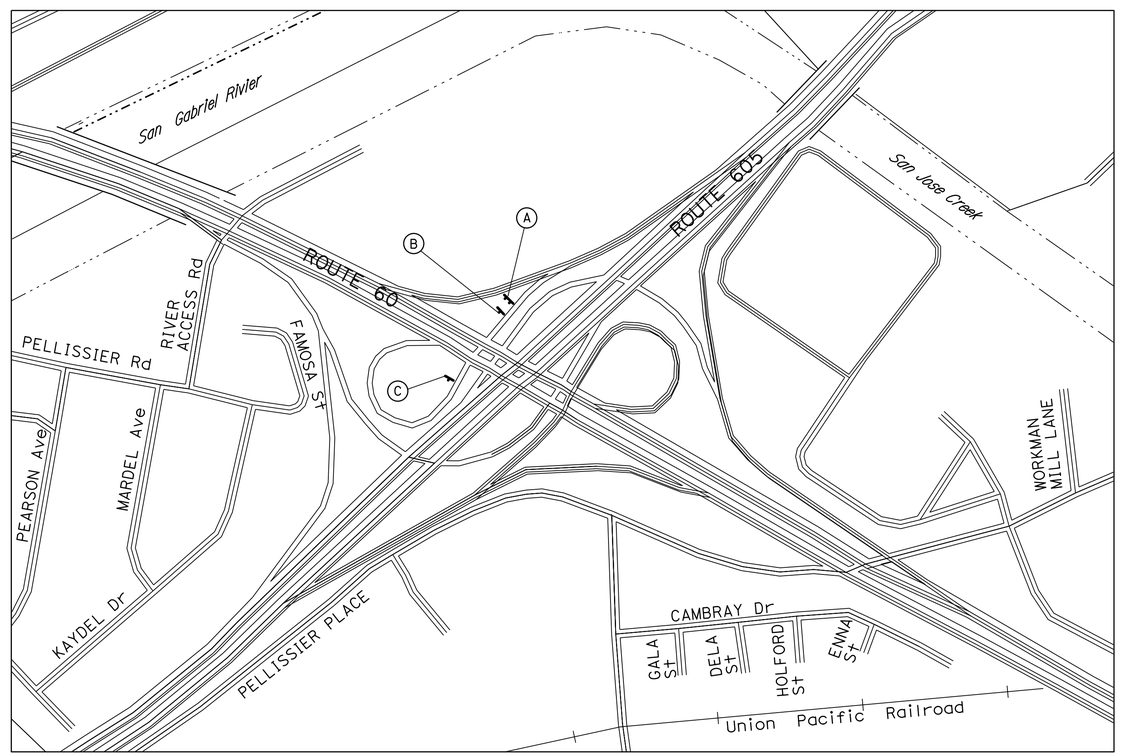

CONSTRUCTION AREA SIGNS

NO SCALE

CS-2

APPROVED FOR CONSTRUCTION AREA SIGNS WORK ONLY.

STATE OF CALIFORNIA - DEPARTMENT OF TRANSPORTATION
Caltrans OFFICE OF DESIGN D

FUNCTIONAL SUPERVISOR: KAREN FONG

CALCULATED-DESIGNED BY: NARENDRA DESAI
CHECKED BY: REFUGIO DOMINGUEZ

REVISED BY
DATE REVISED

LAST REVISION 00-00-00
DATE PLOTTED => 02-JAN-2013
TIME PLOTTED => 19:23

Dist	COUNTY	ROUTE	POST MILES TOTAL PROJECT	SHEET No.	TOTAL SHEETS
07	LA	5,10,14, 47,60,etc.	Var	35	72

REGISTERED CIVIL ENGINEER 8-30-12 DATE

10-22-12
PLANS APPROVAL DATE

REGISTERED PROFESSIONAL ENGINEER REFUGIO DOMINGUEZ No. 50820 Exp. 9/30/13 CIVIL STATE OF CALIFORNIA

THE STATE OF CALIFORNIA OR ITS OFFICERS OR AGENTS SHALL NOT BE RESPONSIBLE FOR THE ACCURACY OR COMPLETENESS OF SCANNED COPIES OF THIS PLAN SHEET.

NOTES:

1. SIGN LOCATIONS SHOWN ARE APPROXIMATE. EXACT LOCATIONS WILL BE DETERMINED BY THE ENGINEER.
2. FOR ADDITIONAL CONSTRUCTION AREA SIGNS INFORMATION, SEE TRAFFIC HANDLING DETAILS.

STATIONARY MOUNTED CONSTRUCTION AREA SIGNS

SIGN No. (X)	SIGN CODE	PANEL SIZE	SIGN MESSAGE	POST No. & SIZE	No. OF SIGNS
A	C40(CA)	144" X 60"	TRAFFIC FINES DOUBLED IN CONSTRUCTION ZONES	2 - 6" X 6"	
B	W20-1	48" X 48"	ROAD WORK AHEAD	1 - 4" X 6"	
C	G20-2	48" X 24"	END ROAD WORK	1 - 4" X 6"	
D	C40(CA)	108" X 42"	TRAFFIC FINES DOUBLED IN CONSTRUCTION ZONES	1 - 4" X 6"	2
E	W20-1	36" X 36"	ROAD WORK AHEAD	1 - 4" X 6"	2
F	G20-2	36" X 18"	END ROAD WORK	1 - 4" X 6"	3
TOTAL					7

LOCATION 15

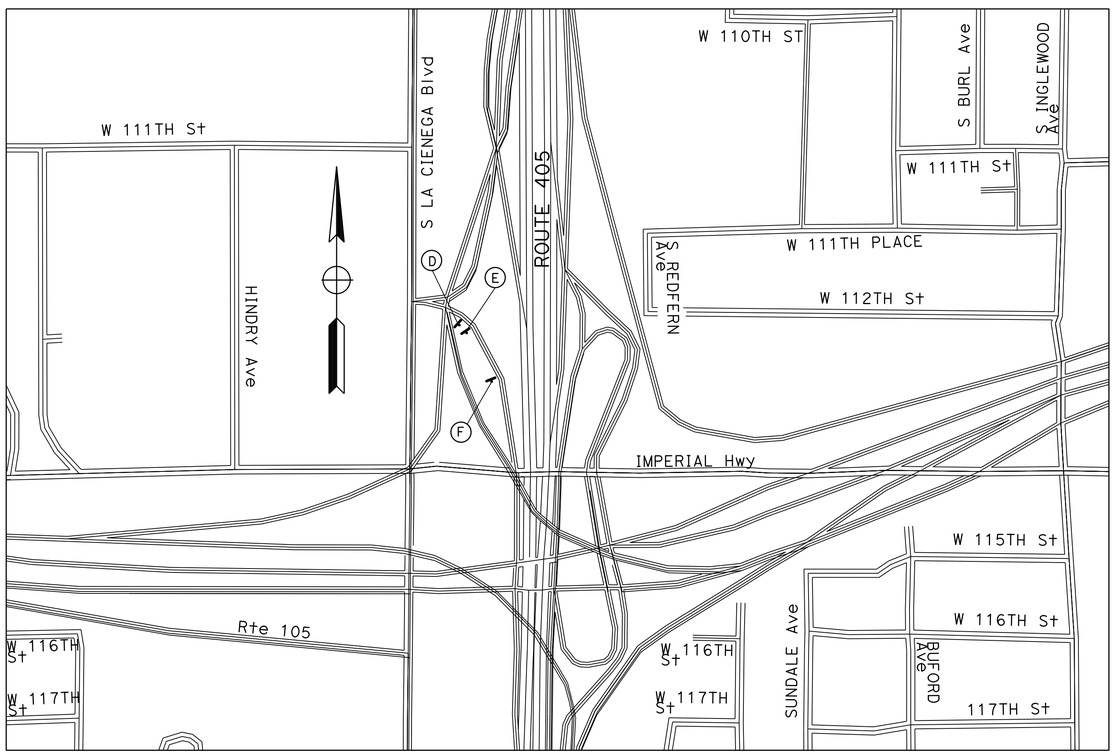

LOCATION 6

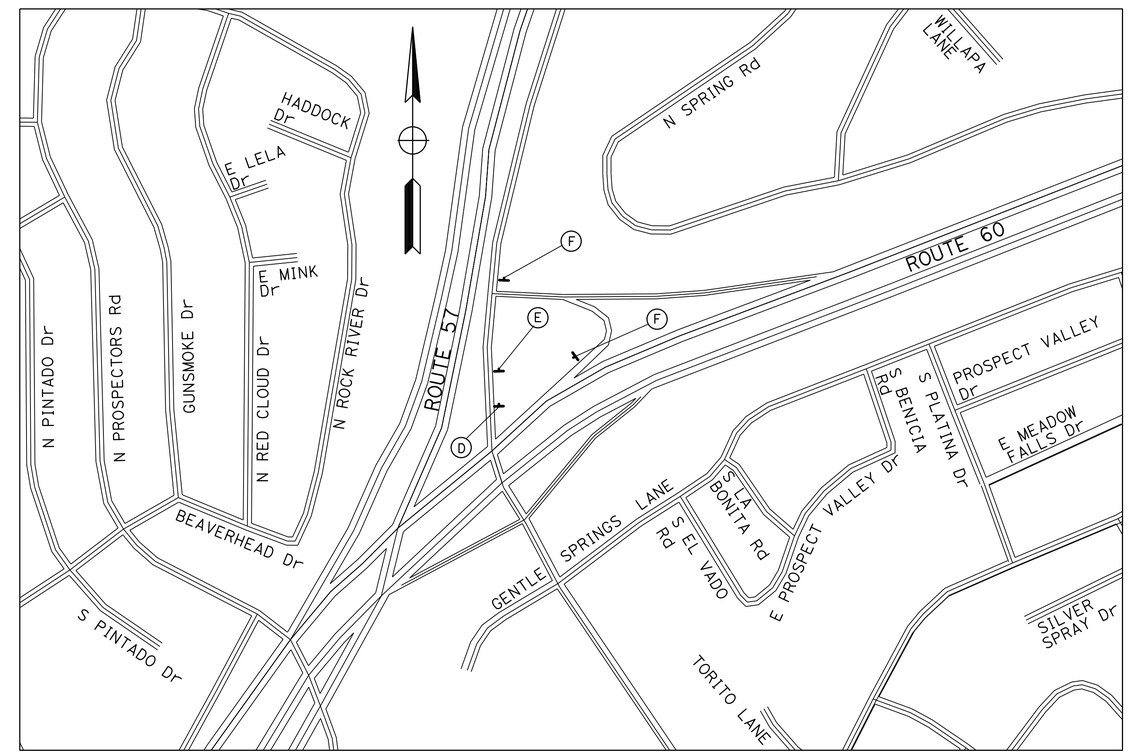

CONSTRUCTION AREA SIGNS

NO SCALE

CS-3

APPROVED FOR CONSTRUCTION AREA SIGNS WORK ONLY.

REVISED BY | DATE REVISED
NARENDRA DESAI | REFUGIO DOMINGUEZ
CALCULATED-DESIGNED BY | CHECKED BY
FUNCTIONAL SUPERVISOR | KAREN FONG
STATE OF CALIFORNIA - DEPARTMENT OF TRANSPORTATION
Caltrans® OFFICE OF DESIGN D

LAST REVISION 00-00-00 | DATE PLOTTED => 02-JAN-2013 | TIME PLOTTED => 19:23

Dist	COUNTY	ROUTE	POST MILES TOTAL PROJECT	SHEET No.	TOTAL SHEETS
07	LA	5,10,14, 47,60,etc.	Var	36	72

REGISTERED CIVIL ENGINEER — DATE 8-30-12

10-22-12
PLANS APPROVAL DATE

REGISTERED PROFESSIONAL ENGINEER REFUGIO DOMINGUEZ No. 50820 Exp. 9/30/13 CIVIL STATE OF CALIFORNIA

THE STATE OF CALIFORNIA OR ITS OFFICERS OR AGENTS SHALL NOT BE RESPONSIBLE FOR THE ACCURACY OR COMPLETENESS OF SCANNED COPIES OF THIS PLAN SHEET.

NOTES:

1. SIGN LOCATIONS SHOWN ARE APPROXIMATE. EXACT LOCATIONS WILL BE DETERMINED BY THE ENGINEER.
2. FOR ADDITIONAL CONSTRUCTION AREA SIGNS INFORMATION, SEE TRAFFIC HANDLING DETAILS.

STATIONARY MOUNTED CONSTRUCTION AREA SIGNS

SIGN No. (X)	SIGN CODE	PANEL SIZE	SIGN MESSAGE	POST No. & SIZE	No. OF SIGNS
A	C40(CA)	144" X 60"	TRAFFIC FINES DOUBLED IN CONSTRUCTION ZONES	2 - 6" X 6"	1
B	W20-1	48" X 48"	ROAD WORK AHEAD	1 - 4" X 6"	1
C	G20-2	48" X 24"	END ROAD WORK	1 - 4" X 6"	1
D	C40(CA)	108" X 42"	TRAFFIC FINES DOUBLED IN CONSTRUCTION ZONES	1 - 4" X 6"	3
E	W20-1	36" X 36"	ROAD WORK AHEAD	1 - 4" X 6"	3
F	G20-2	36" X 18"	END ROAD WORK	1 - 4" X 6"	3
TOTAL					12

LOCATION 7

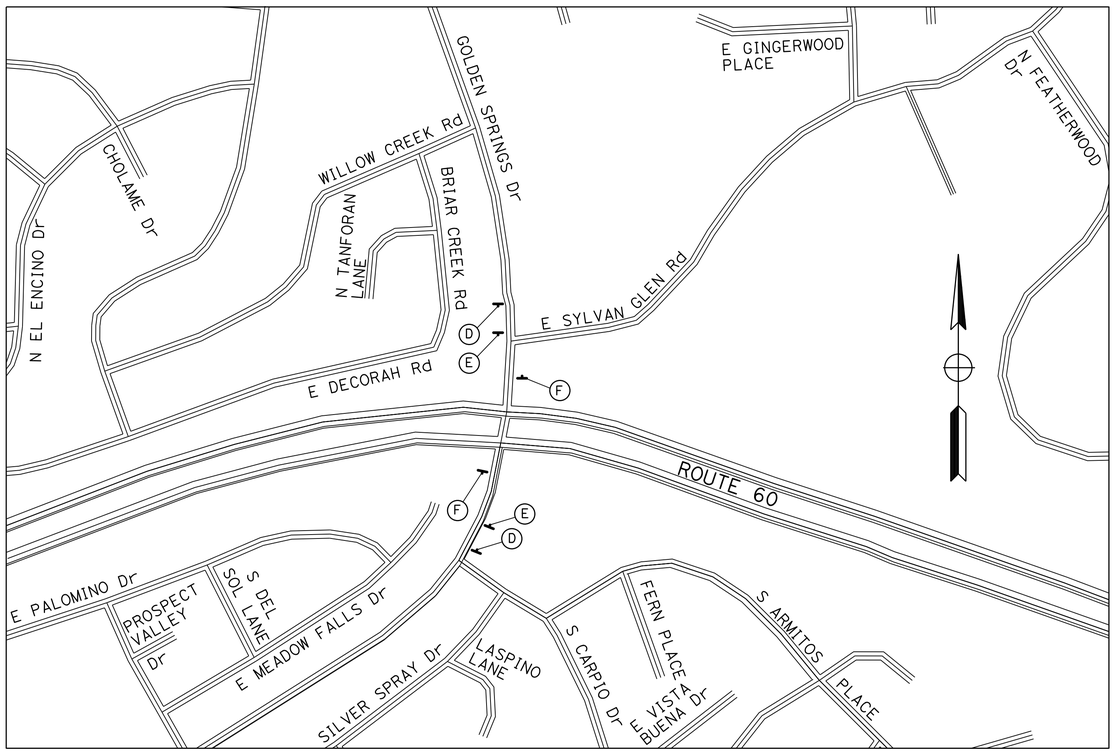

LOCATIONS 8 AND 9

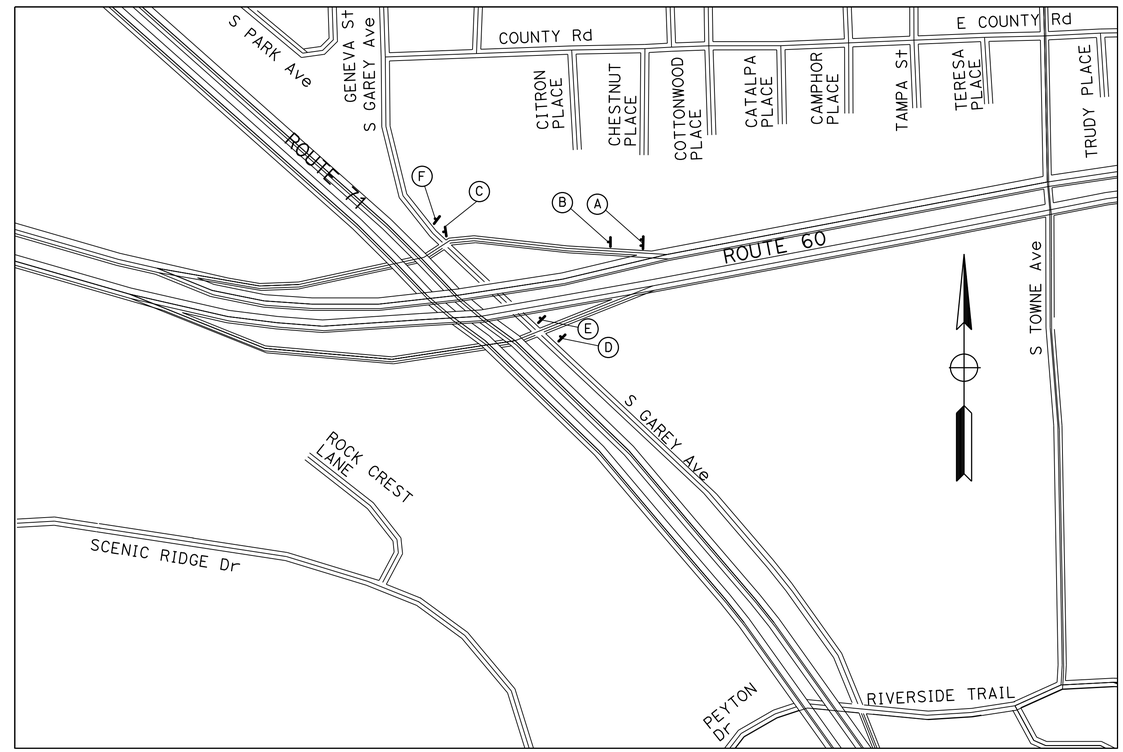

CONSTRUCTION AREA SIGNS

NO SCALE

CS-4

APPROVED FOR CONSTRUCTION AREA SIGNS WORK ONLY

STATE OF CALIFORNIA - DEPARTMENT OF TRANSPORTATION
Caltrans® OFFICE OF DESIGN D

FUNCTIONAL SUPERVISOR: KAREN FONG
CALCULATED-DESIGNED BY: NARENDRA DESAI
CHECKED BY: REFUGIO DOMINGUEZ
REVISED BY
DATE REVISED

LAST REVISION 00-00-00
DATE PLOTTED => 02-JAN-2013
TIME PLOTTED => 19:23

Dist	COUNTY	ROUTE	POST MILES TOTAL PROJECT	SHEET No.	TOTAL SHEETS
07	LA	5,10,14, 47,60,etc.	Var	37	72

REGISTERED CIVIL ENGINEER 8-30-12 DATE

10-22-12
PLANS APPROVAL DATE

REGISTERED PROFESSIONAL ENGINEER REFUGIO DOMINGUEZ No. 50820 Exp. 9/30/13 CIVIL STATE OF CALIFORNIA

THE STATE OF CALIFORNIA OR ITS OFFICERS OR AGENTS SHALL NOT BE RESPONSIBLE FOR THE ACCURACY OR COMPLETENESS OF SCANNED COPIES OF THIS PLAN SHEET.

NOTES:

1. SIGN LOCATIONS SHOWN ARE APPROXIMATE. EXACT LOCATIONS WILL BE DETERMINED BY THE ENGINEER.
2. FOR ADDITIONAL CONSTRUCTION AREA SIGNS INFORMATION, SEE TRAFFIC HANDLING DETAILS.

STATIONARY MOUNTED CONSTRUCTION AREA SIGNS

SIGN No. (X)	SIGN CODE	PANEL SIZE	SIGN MESSAGE	POST No. & SIZE	No. OF SIGNS
A	C40(CA)	144" X 60"	TRAFFIC FINES DOUBLED IN CONSTRUCTION ZONES	2 - 6" X 6"	4
B	W20-1	48" X 48"	ROAD WORK AHEAD	1 - 4" X 6"	4
C	G20-2	48" X 24"	END ROAD WORK	1 - 4" X 6"	2
TOTAL					10

LOCATION 11

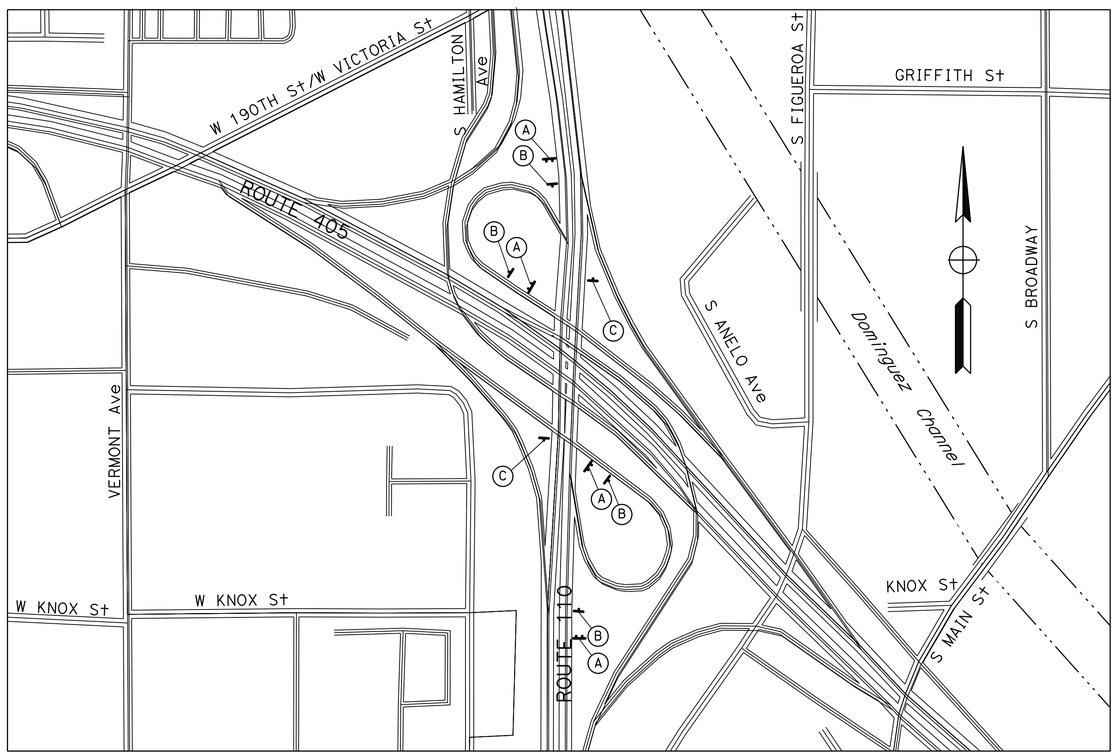

CONSTRUCTION AREA SIGNS

NO SCALE

CS-5

APPROVED FOR CONSTRUCTION AREA SIGNS WORK ONLY.

STATE OF CALIFORNIA - DEPARTMENT OF TRANSPORTATION
Caltrans® OFFICE OF DESIGN D

FUNCTIONAL SUPERVISOR: KAREN FONG
CALCULATED-DESIGNED BY: NARENDRA DESAI
CHECKED BY: REFUGIO DOMINGUEZ
REVISED BY
DATE REVISED

LAST REVISION 00-00-00 | DATE PLOTTED => 02-JAN-2013 | TIME PLOTTED => 19:23

Dist	COUNTY	ROUTE	POST MILES TOTAL PROJECT	SHEET No.	TOTAL SHEETS
07	LA	5,10,14, 47,60,etc.	Var	38	72

REGISTERED CIVIL ENGINEER 8-30-12 DATE

10-22-12
PLANS APPROVAL DATE

REGISTERED PROFESSIONAL ENGINEER REFUGIO DOMINGUEZ No. 50820 Exp. 9/30/13 CIVIL STATE OF CALIFORNIA

THE STATE OF CALIFORNIA OR ITS OFFICERS OR AGENTS SHALL NOT BE RESPONSIBLE FOR THE ACCURACY OR COMPLETENESS OF SCANNED COPIES OF THIS PLAN SHEET.

NOTES:

1. SIGN LOCATIONS SHOWN ARE APPROXIMATE. EXACT LOCATIONS WILL BE DETERMINED BY THE ENGINEER.
2. FOR ADDITIONAL CONSTRUCTION AREA SIGNS INFORMATION, SEE TRAFFIC HANDLING DETAILS.

STATIONARY MOUNTED CONSTRUCTION AREA SIGNS

SIGN No. (X)	SIGN CODE	PANEL SIZE	SIGN MESSAGE	POST No. & SIZE	No. OF SIGNS
A	C40(CA)	144" X 60"	TRAFFIC FINES DOUBLED IN CONSTRUCTION ZONES	2 - 6" X 6"	4
B	W20-1	48" X 48"	ROAD WORK AHEAD	1 - 4" X 6"	4
C	G20-2	48" X 24"	END ROAD WORK	1 - 4" X 6"	4
TOTAL					12

LOCATION 1

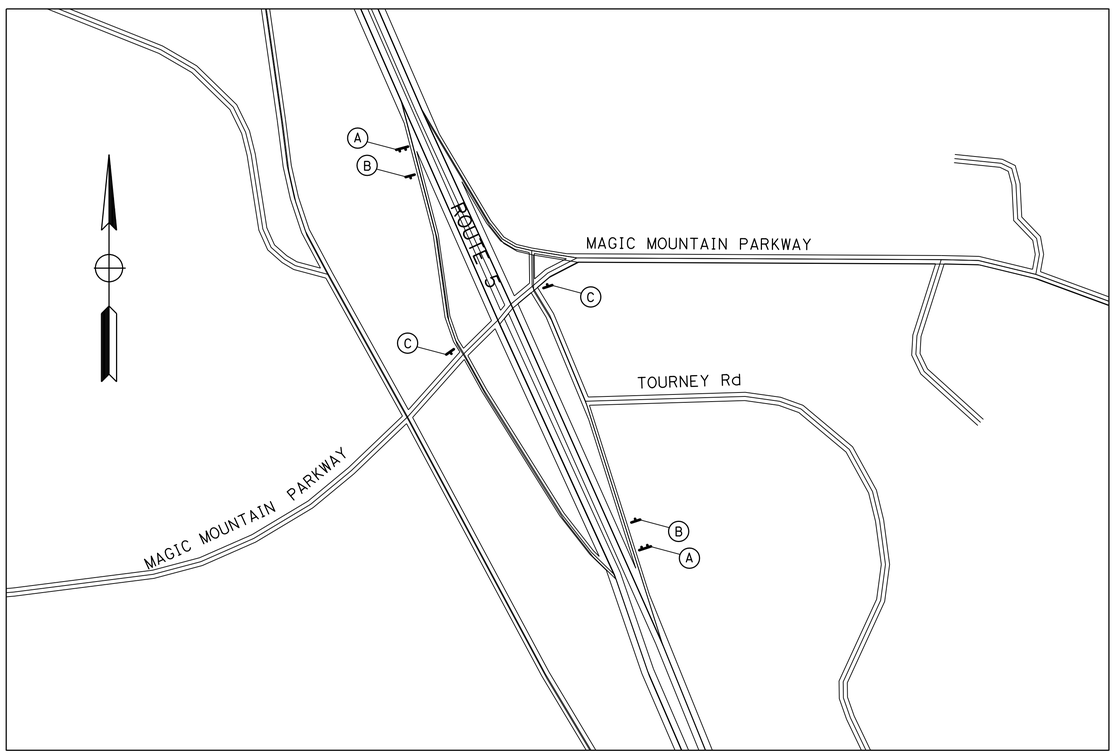

LOCATION 2

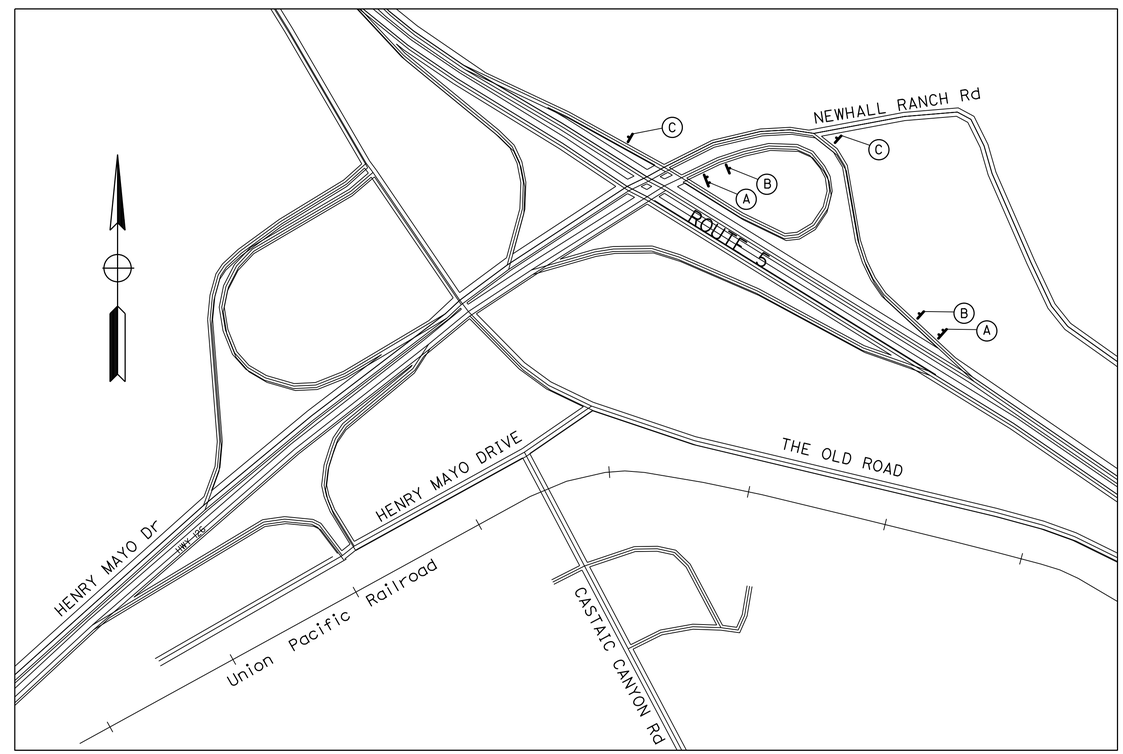

CONSTRUCTION AREA SIGNS

NO SCALE

CS-6

APPROVED FOR CONSTRUCTION AREA SIGNS WORK ONLY.

STATE OF CALIFORNIA - DEPARTMENT OF TRANSPORTATION
Caltrans® OFFICE OF DESIGN D

FUNCTIONAL SUPERVISOR: KAREN FONG
CALCULATED-DESIGNED BY: NARENDRA DESAI
CHECKED BY: REFUGIO DOMINGUEZ
REVISED BY
DATE REVISED

LAST REVISION 00-00-00
DATE PLOTTED => 02-JAN-2013
TIME PLOTTED => 19:23

Dist	COUNTY	ROUTE	POST MILES TOTAL PROJECT	SHEET No.	TOTAL SHEETS
07	LA	5,10,14, 47,60,etc.	Var	39	72

REGISTERED CIVIL ENGINEER 8-30-12 DATE

10-22-12
PLANS APPROVAL DATE

REGISTERED PROFESSIONAL ENGINEER REFUGIO DOMINGUEZ No. 50820 Exp. 9/30/13 CIVIL STATE OF CALIFORNIA

THE STATE OF CALIFORNIA OR ITS OFFICERS OR AGENTS SHALL NOT BE RESPONSIBLE FOR THE ACCURACY OR COMPLETENESS OF SCANNED COPIES OF THIS PLAN SHEET.

NOTES:

1. SIGN LOCATIONS SHOWN ARE APPROXIMATE. EXACT LOCATIONS WILL BE DETERMINED BY THE ENGINEER.
2. FOR ADDITIONAL CONSTRUCTION AREA SIGNS INFORMATION, SEE TRAFFIC HANDLING DETAILS.

STATIONARY MOUNTED CONSTRUCTION AREA SIGNS

SIGN No. (X)	SIGN CODE	PANEL SIZE	SIGN MESSAGE	POST No. & SIZE	No. OF SIGNS
A	C40(CA)	144" X 60"	TRAFFIC FINES DOUBLED IN CONSTRUCTION ZONES	2 - 6" X 6"	2
B	W20-1	48" X 48"	ROAD WORK AHEAD	1 - 4" X 6"	2
C	G20-2	48" X 24"	END ROAD WORK	1 - 4" X 6"	2
TOTAL					6

LOCATION 3

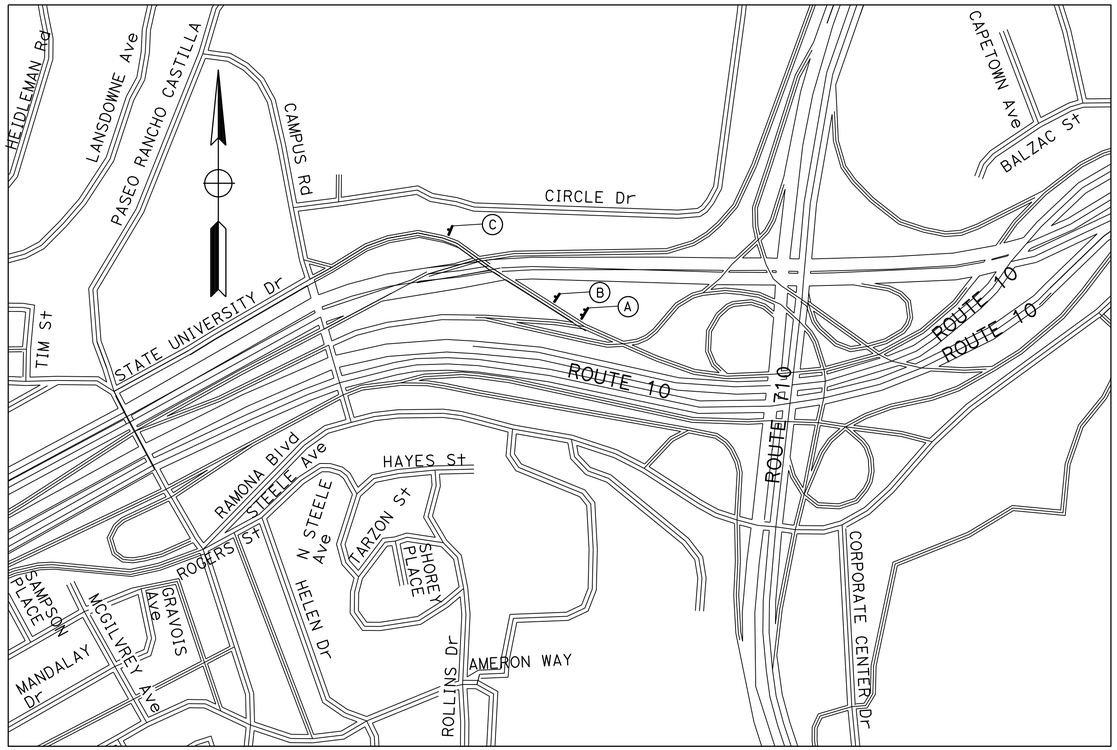

LOCATION 4

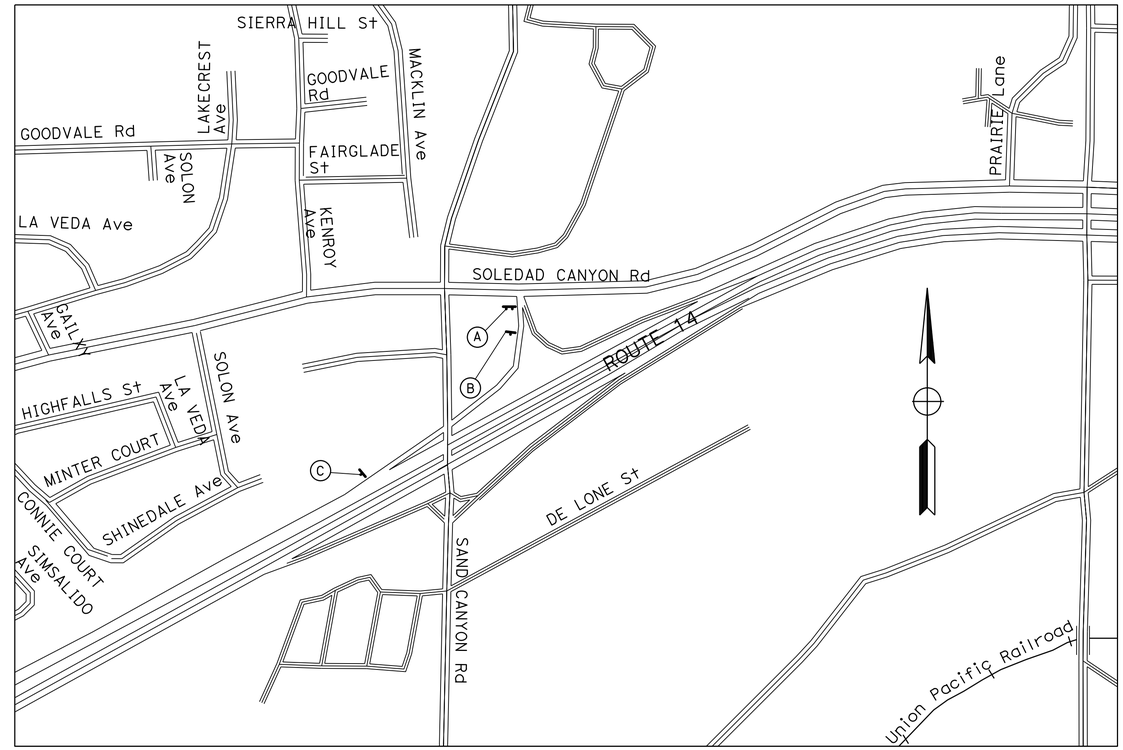

CONSTRUCTION AREA SIGNS

NO SCALE

CS-7

APPROVED FOR CONSTRUCTION AREA SIGNS WORK.

STATE OF CALIFORNIA - DEPARTMENT OF TRANSPORTATION
Caltrans® OFFICE OF DESIGN D

FUNCTIONAL SUPERVISOR: KAREN FONG
CALCULATED-DESIGNED BY: NARENDRA DESAI
CHECKED BY: REFUGIO DOMINGUEZ
REVISED BY
DATE REVISED

LAST REVISION 00-00-00
DATE PLOTTED => 02-JAN-2013
TIME PLOTTED => 19:23

Dist	COUNTY	ROUTE	POST MILES TOTAL PROJECT	SHEET No.	TOTAL SHEETS
07	LA	5,10,14, 47,60,etc.	Var	40	72

REGISTERED CIVIL ENGINEER 8-30-12 DATE

10-22-12
PLANS APPROVAL DATE

REGISTERED PROFESSIONAL ENGINEER REFUGIO DOMINGUEZ No. 50820 Exp. 9/30/13 CIVIL STATE OF CALIFORNIA

THE STATE OF CALIFORNIA OR ITS OFFICERS OR AGENTS SHALL NOT BE RESPONSIBLE FOR THE ACCURACY OR COMPLETENESS OF SCANNED COPIES OF THIS PLAN SHEET.

NOTES:

1. SIGN LOCATIONS SHOWN ARE APPROXIMATE. EXACT LOCATIONS WILL BE DETERMINED BY THE ENGINEER.
2. FOR ADDITIONAL CONSTRUCTION AREA SIGNS INFORMATION, SEE TRAFFIC HANDLING DETAILS.

STATIONARY MOUNTED CONSTRUCTION AREA SIGNS

SIGN No. (X)	SIGN CODE	PANEL SIZE	SIGN MESSAGE	POST No. & SIZE	No. OF SIGNS
A	C40(CA)	144" X 60"	TRAFFIC FINES DOUBLED IN CONSTRUCTION ZONES	2 - 6" X 6"	4
B	W20-1	48" X 48"	ROAD WORK AHEAD	1 - 4" X 6"	4
C	G20-2	48" X 24"	END ROAD WORK	1 - 4" X 6"	4
TOTAL					12

LOCATION 5 & 10

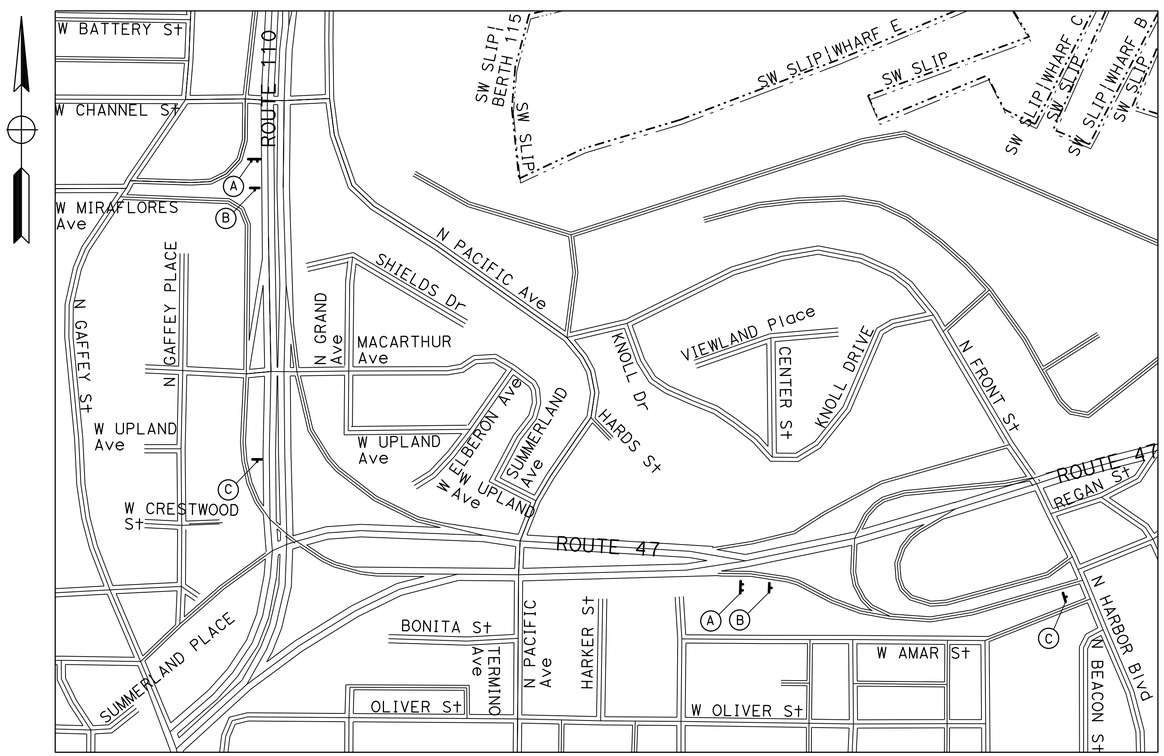

LOCATION 13 & 14

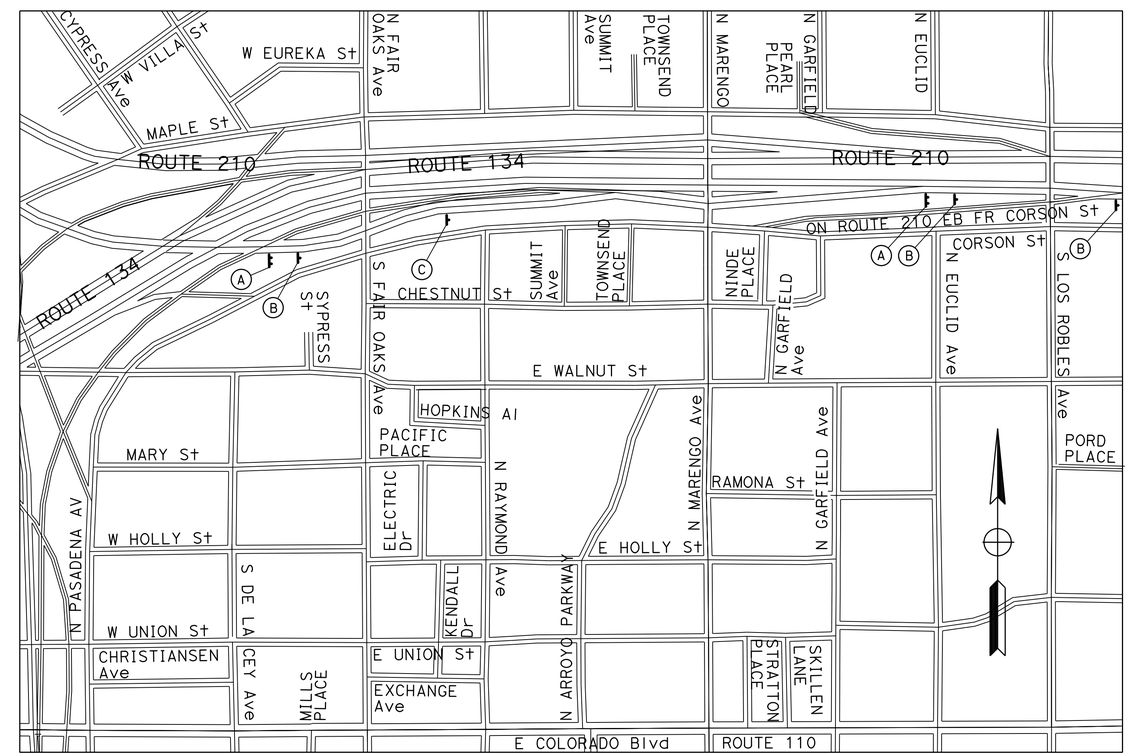

CONSTRUCTION AREA SIGNS

NO SCALE

CS-8

APPROVED FOR CONSTRUCTION AREA SIGNS WORK ONLY.

STATE OF CALIFORNIA - DEPARTMENT OF TRANSPORTATION
Caltrans® OFFICE OF DESIGN D

FUNCTIONAL SUPERVISOR: KAREN FONG
CALCULATED-DESIGNED BY: NARENDRA DESAI
CHECKED BY: REFUGIO DOMINGUEZ
REVISED BY
DATE REVISED

LAST REVISION 00-00-00
DATE PLOTTED => 02-JAN-2013
TIME PLOTTED => 19:23

Dist	COUNTY	ROUTE	POST MILES TOTAL PROJECT	SHEET No.	TOTAL SHEETS
07	LA	5,10,14, 47,60,etc.	Var	41	72

REGISTERED CIVIL ENGINEER 8-30-12 DATE

10-22-12
PLANS APPROVAL DATE

REGISTERED PROFESSIONAL ENGINEER REFUGIO DOMINGUEZ No. 50820 Exp. 9-30-13 CIVIL STATE OF CALIFORNIA

THE STATE OF CALIFORNIA OR ITS OFFICERS OR AGENTS SHALL NOT BE RESPONSIBLE FOR THE ACCURACY OR COMPLETENESS OF SCANNED COPIES OF THIS PLAN SHEET.

NOTES:

1. SIGN LOCATIONS SHOWN ARE APPROXIMATE. EXACT LOCATIONS WILL BE DETERMINED BY THE ENGINEER.
2. FOR ADDITIONAL CONSTRUCTION AREA SIGNS INFORMATION, SEE TRAFFIC HANDLING DETAILS.

STATIONARY MOUNTED CONSTRUCTION AREA SIGNS

SIGN No.(X)	SIGN CODE	PANEL SIZE	SIGN MESSAGE	POST No. & SIZE	No. OF SIGNS
C	G20-2	48" X 24"			
D	C40(CA)	108" X 42"	TRAFFIC FINES DOUBLED IN CONSTRUCTION ZONES	1 - 4" X 6"	2
E	W20-1	36" X 36"	ROAD WORK AHEAD	1 - 4" X 6"	2
F	G20-2	36" X 18"	END ROAD WORK	1 - 4" X 6"	2
TOTAL					6

LOCATION 12

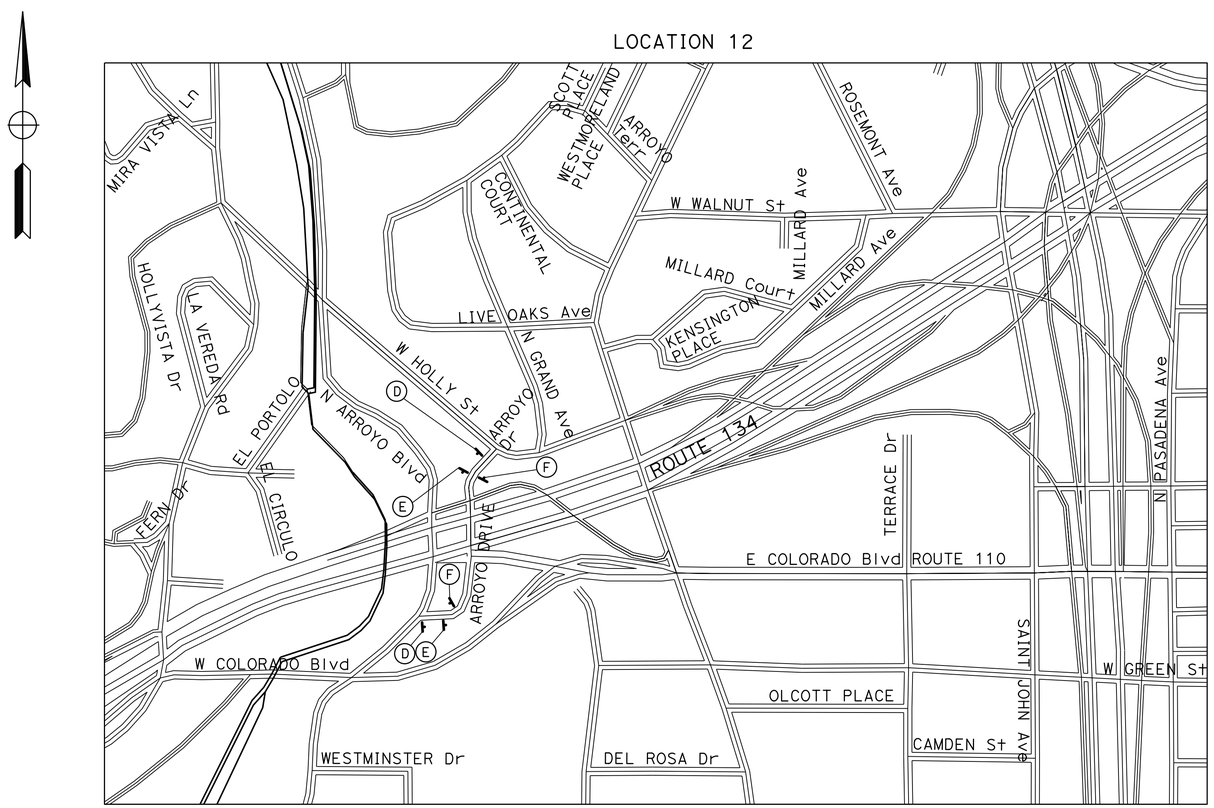

APPROVED FOR CONSTRUCTION AREA SIGNS WORK ONLY.

CONSTRUCTION AREA SIGNS

NO SCALE

CS-9

STATE OF CALIFORNIA - DEPARTMENT OF TRANSPORTATION
Caltrans® OFFICE OF DESIGN D

FUNCTIONAL SUPERVISOR: KAREN FONG
CALCULATED-DESIGNED BY: NARENDRA DESAI
CHECKED BY: REFUGIO DOMINGUEZ
REVISED BY
DATE REVISED

LAST REVISION 10-09-12
DATE PLOTTED => 02-JAN-2013
TIME PLOTTED => 19:23

Dist	COUNTY	ROUTE	POST MILES TOTAL PROJECT	SHEET No.	TOTAL SHEETS
07	LA	5,10,14 47,60, etc.	Var	42	72

REGISTERED CIVIL ENGINEER 5-24-11 DATE

10-22-12
PLANS APPROVAL DATE

REGISTERED PROFESSIONAL ENGINEER CHEN CHUNG LIU No. C67562 Exp. 6-30-13 CIVIL STATE OF CALIFORNIA

THE STATE OF CALIFORNIA OR ITS OFFICERS OR AGENTS SHALL NOT BE RESPONSIBLE FOR THE ACCURACY OR COMPLETENESS OF SCANNED COPIES OF THIS PLAN SHEET.

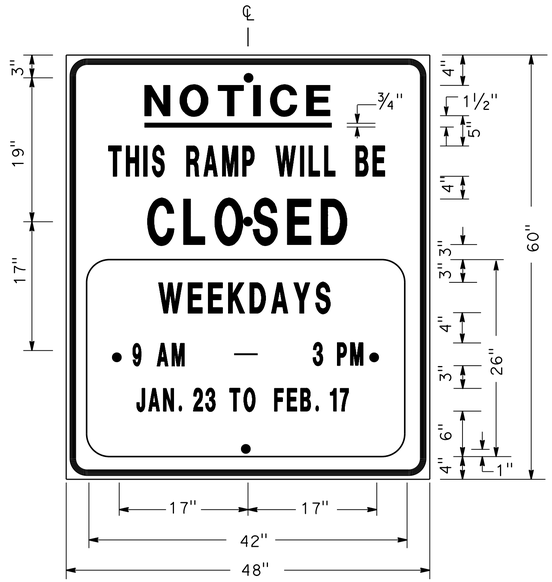

SIGN SP-1

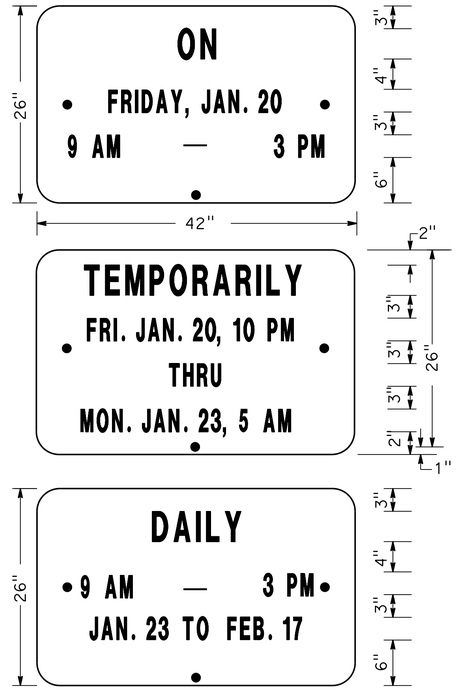

ALTERNATE OVERLAY PANELS (TYPICAL)

SPECIAL ADVANCE NOTICE PUBLICITY SIGN

NOTES: (SIGN SP-1)

1. SIGNS SHALL HAVE ORANGE RETROREFLECTORIZED BACKGROUND WITH BLACK BORDER AND LETTERS.
2. BOLT HOLES SHALL BE 3/8" DIAMETER.
3. BASE MATERIAL SHALL BE ALUMINUM (MINIMUM 0.06").
4. SIGNS SHALL BE MOUNTED WITH BOTTOMS OF SIGNS A MINIMUM OF 6' ABOVE GROUND.

SIZE	BORDER WIDTH	MARGIN WIDTH	LETTER SIZE					CORNER RADIUS
			LINE 1	LINE 2*	LINE 3	LINE 4	LINE 5,6 & 7*	
48"x60"	1 1/4"	3/4"	4E	4D	6E	4D		3"
42"x26"	OVERLAY						3D	1 1/2"
* CONDENSED SPACING IF NECESSARY								

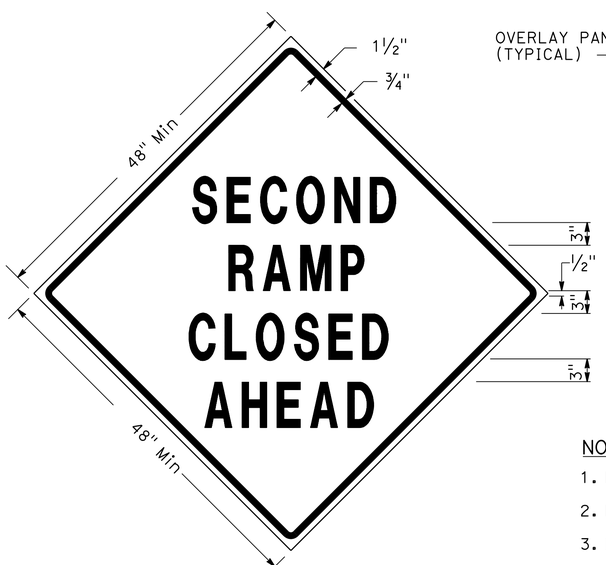

SIGN SP-3

SIGN SP-5

NOTES: (SIGNS SP-3 & SP-5)

1. LETTERS - 6" SERIES D.
2. LETTERS AND BORDERS - BLACK ON RETROREFLECTORIZED ORANGE BACKGROUND.
3. BASE MATERIAL SHALL BE ALUMINUM (MINIMUM 0.06").
4. SIGNS SHALL BE MOUNTED WITH BOTTOMS OF SIGNS A MINIMUM OF 6' ABOVE GROUND.

SPECIAL SIGN FOR EXIT RAMP CLOSURES

SIGN SP-4

NOTES: (SIGN SP-4)

1. LETTERS - 6" SERIES C.
2. LETTERS AND BORDERS - BLACK ON RETROREFLECTORIZED WHITE BACKGROUND.
3. BASE MATERIAL SHALL BE ALUMINUM (MINIMUM 0.06").
4. SIGNS SHALL BE PLACED AT RAMP ENTRANCES IN ADDITION TO SIGNS POSTED IN ACCORDANCE WITH STANDARD PLAN T14.

SPECIAL SIGN FOR ENTRANCE RAMP CLOSURES

TRAFFIC HANDLING DETAILS
TRAFFIC CONTROL SYSTEM FOR RAMP CLOSURES, DETOUR SIGNS AND MISCELLANEOUS DETAILS
SHEET 1 OF 2

NO SCALE

THD-1

STATE OF CALIFORNIA - DEPARTMENT OF TRANSPORTATION
Caltrans®

FUNCTIONAL SUPERVISOR	MARTIN OREGEL
CALCULATED-DESIGNED BY	ALBERT K YU
CHECKED BY	JOCELYN C CHIANG
REVISED BY	JC
DATE REVISED	7/10

LAST REVISION 10-09-12 | DATE PLOTTED => 02-JAN-2013 | TIME PLOTTED => 19:23

Dist	COUNTY	ROUTE	POST MILES TOTAL PROJECT	SHEET No.	TOTAL SHEETS
07	LA	5,10,14 47,60, etc.	Var	43	72

REGISTERED CIVIL ENGINEER 5-24-11 DATE

10-22-12
PLANS APPROVAL DATE

REGISTERED PROFESSIONAL ENGINEER CHEN CHUNG LIU No. C67562 Exp. 6-30-13 CIVIL STATE OF CALIFORNIA

THE STATE OF CALIFORNIA OR ITS OFFICERS OR AGENTS SHALL NOT BE RESPONSIBLE FOR THE ACCURACY OR COMPLETENESS OF SCANNED COPIES OF THIS PLAN SHEET.

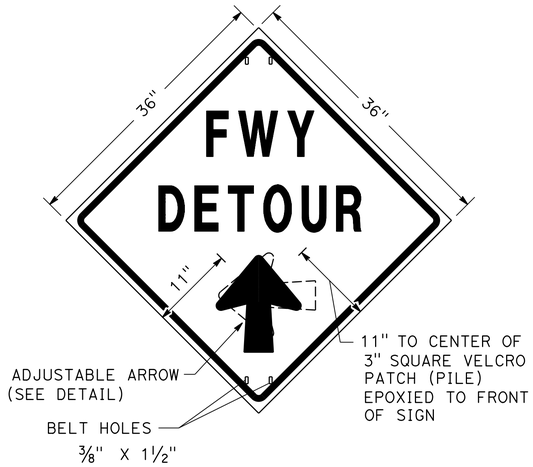

SIGN SP-2

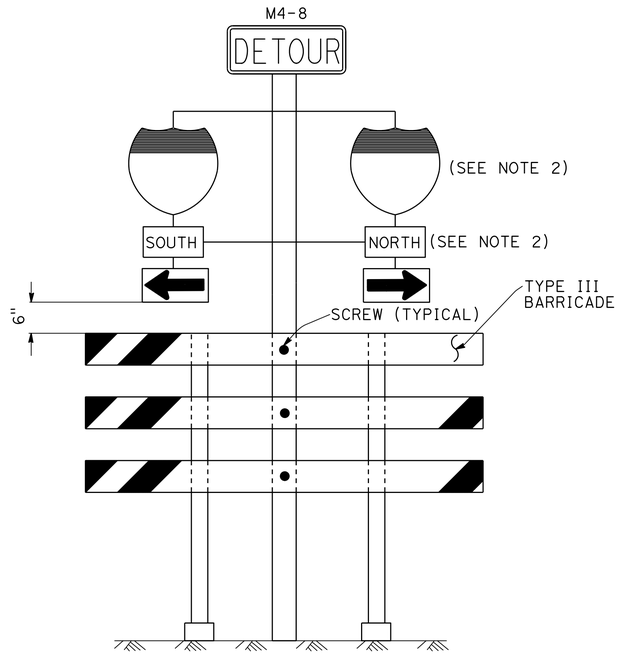

SIGN SP-6 (SEE NOTE 1)

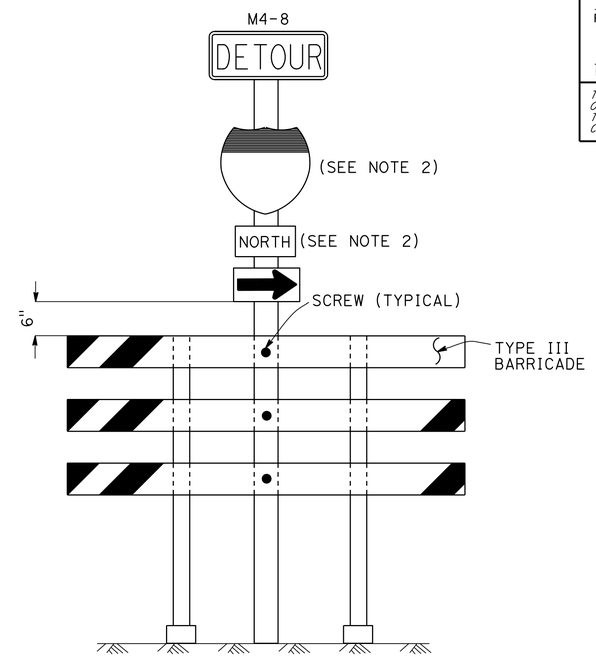

SIGN SP-7 (SEE NOTE 1)

NOTES: (SIGN SP-2)

1. LETTERS -6" SERIES E.
2. LETTERS, BORDER AND ARROW - BLACK ON RETROREFLECTORIZED ORANGE BACKGROUND.
3. BASE MATERIAL FOR SIGNS AND ARROWS SHALL BE ALUMINUM (MINIMUM 0.06").
4. BELTS (LUGGAGE STRAPS) SHALL BE 1" WIDE BY 48" LONG, MADE OF COTTON OR POLYPROPYLENE WEB MATERIAL.
5. SIGNS SHALL BE MOUNTED WITH BOTTOMS OF SIGNS A MINIMUM OF 6' ABOVE GROUND EXCEPT AS OTHERWISE SHOWN ON OTHER TRAFFIC HANDLING DETAILS PLANS.

ABBREVIATION:

(CA) CALIFORNIA CODE

NOTES: (SIGNS SP-6 & SP-7)

1. IN LIEU OF PLACING SIGNS ON TYPE III BARRICADES, SIGNS, INCLUDING POSTS, MAY BE PLACED INTO THE GROUND OR FASTENED ONTO ELECTROLIERS.
2. USE APPROPRIATE ROUTE SHIELD [G26-2(CA), G27-2(CA), G28-2(CA)] AND CARDINAL DIRECTION [NORTH (M3-1), SOUTH (M3-3), EAST (M3-2), WEST (M3-4)]

SPECIAL PORTABLE FREEWAY DETOUR SIGNS

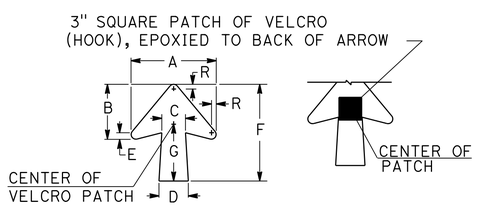

DIMENSIONS							
A	B	C	D	E	F	G	R
11 1/4"	7 1/4"	3 1/8"	4"	7/8"	13"	7 1/2"	5/8"

SPECIAL PORTABLE FREEWAY DETOUR SIGN

ADJUSTABLE ARROW DETAIL

TRAFFIC HANDLING DETAILS

TRAFFIC CONTROL SYSTEM FOR RAMP CLOSURES, DETOUR SIGNS AND MISCELLANEOUS DETAILS

SHEET 2 OF 2

NO SCALE

THD-2

STATE OF CALIFORNIA - DEPARTMENT OF TRANSPORTATION
Caltrans DTM

FUNCTIONAL SUPERVISOR: MARTIN OREGEL
CALCULATED-DESIGNED BY: ALBERT K YU
CHECKED BY: JOCELYN C CHIANG
REVISED BY: JC
DATE REVISED: 7/10

LAST REVISION 10-09-12 | DATE PLOTTED => 02-JAN-2013 | TIME PLOTTED => 19:23

Dist	COUNTY	ROUTE	POST MILES TOTAL PROJECT	SHEET No.	TOTAL SHEETS
07	LA	5,10,14 47,60, etc.	Var	44	65

REGISTERED CIVIL ENGINEER 5-24-11 DATE

10-22-12
PLANS APPROVAL DATE

REGISTERED PROFESSIONAL ENGINEER CHEN CHUNG LIU No. C67562 Exp. 6-30-13 CIVIL STATE OF CALIFORNIA

THE STATE OF CALIFORNIA OR ITS OFFICERS OR AGENTS SHALL NOT BE RESPONSIBLE FOR THE ACCURACY OR COMPLETENESS OF SCANNED COPIES OF THIS PLAN SHEET.

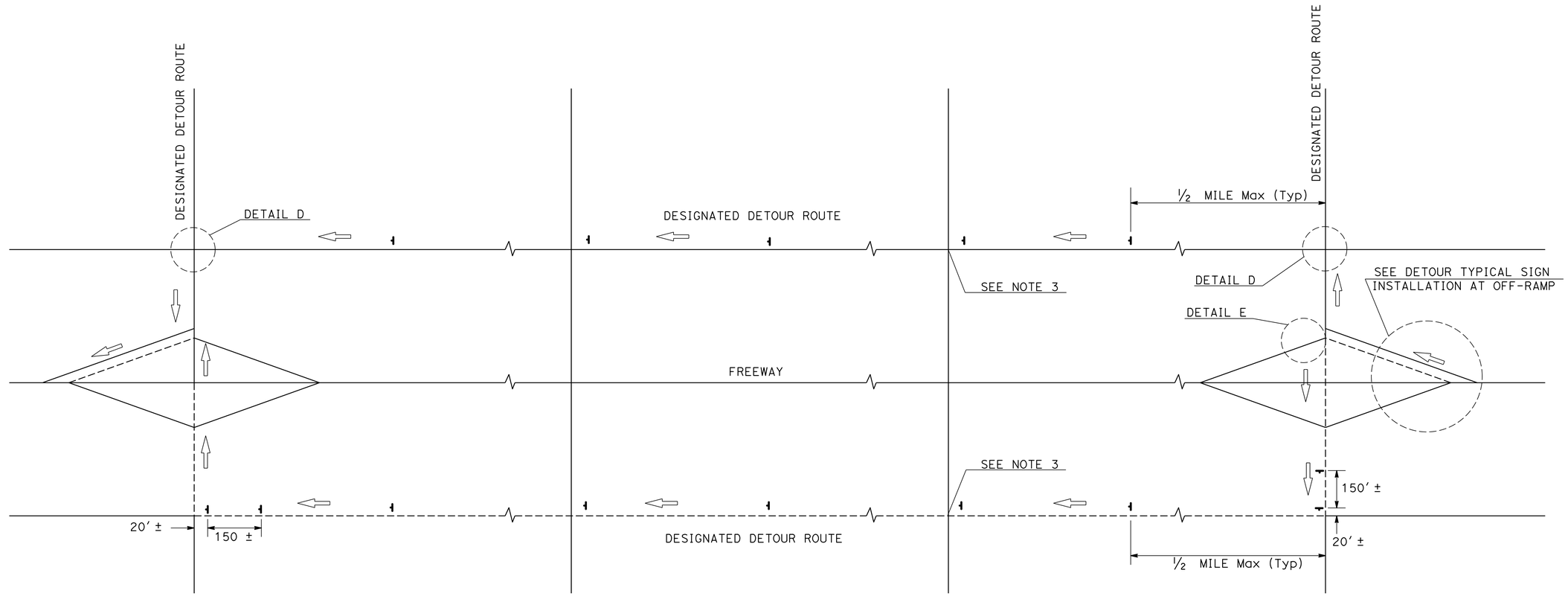

TYPICAL DETOUR SIGN INSTALLATION ALONG DESIGNATED DETOUR ROUTE

LEGEND:

- TEMPORARY SIGN (SP-2)
- AND/OR DESIGNATED DETOUR ROUTE
- DIRECTION OF TRAVEL

NOTES:

1. SP-2 SIGNS SHALL NOT BE INSTALLED ON BARRICADES EXCEPT AS OTHERWISE SHOWN.
2. SIGN LOCATIONS ARE APPROXIMATE. EXACT LOCATIONS WILL BE DETERMINED BY THE ENGINEER.
3. SP-2 SIGNS SHALL BE POSTED AT SIGNALIZED INTERSECTIONS ALONG THE DESIGNATED DETOUR ROUTE OR ½ MILE MAXIMUM APART.

TRAFFIC HANDLING DETAILS

TRAFFIC CONTROL SYSTEM FOR DETOUR SIGN INSTALLATION ALONG DESIGNATED DETOUR ROUTE

SHEET 1 OF 2

NO SCALE

THD-3

REVISED BY	JC
DATE REVISED	7/10
CALCULATED-DESIGNED BY	ALBERT K YU
CHECKED BY	JOCELYN C CHIANG
FUNCTIONAL SUPERVISOR	MARTIN OREGEL

STATE OF CALIFORNIA - DEPARTMENT OF TRANSPORTATION

Caltrans DTM

LAST REVISION 10-09-12 | DATE PLOTTED => 02-JAN-2013 | TIME PLOTTED => 19:23

Dist	COUNTY	ROUTE	POST MILES TOTAL PROJECT	SHEET No.	TOTAL SHEETS
07	LA	5,10,14 47,60, etc.	Var	45	72

REGISTERED CIVIL ENGINEER 5-24-11 DATE

10-22-12
PLANS APPROVAL DATE

REGISTERED PROFESSIONAL ENGINEER CHEN CHUNG LIU No. C67562 Exp. 6-30-13 CIVIL STATE OF CALIFORNIA

THE STATE OF CALIFORNIA OR ITS OFFICERS OR AGENTS SHALL NOT BE RESPONSIBLE FOR THE ACCURACY OR COMPLETENESS OF SCANNED COPIES OF THIS PLAN SHEET.

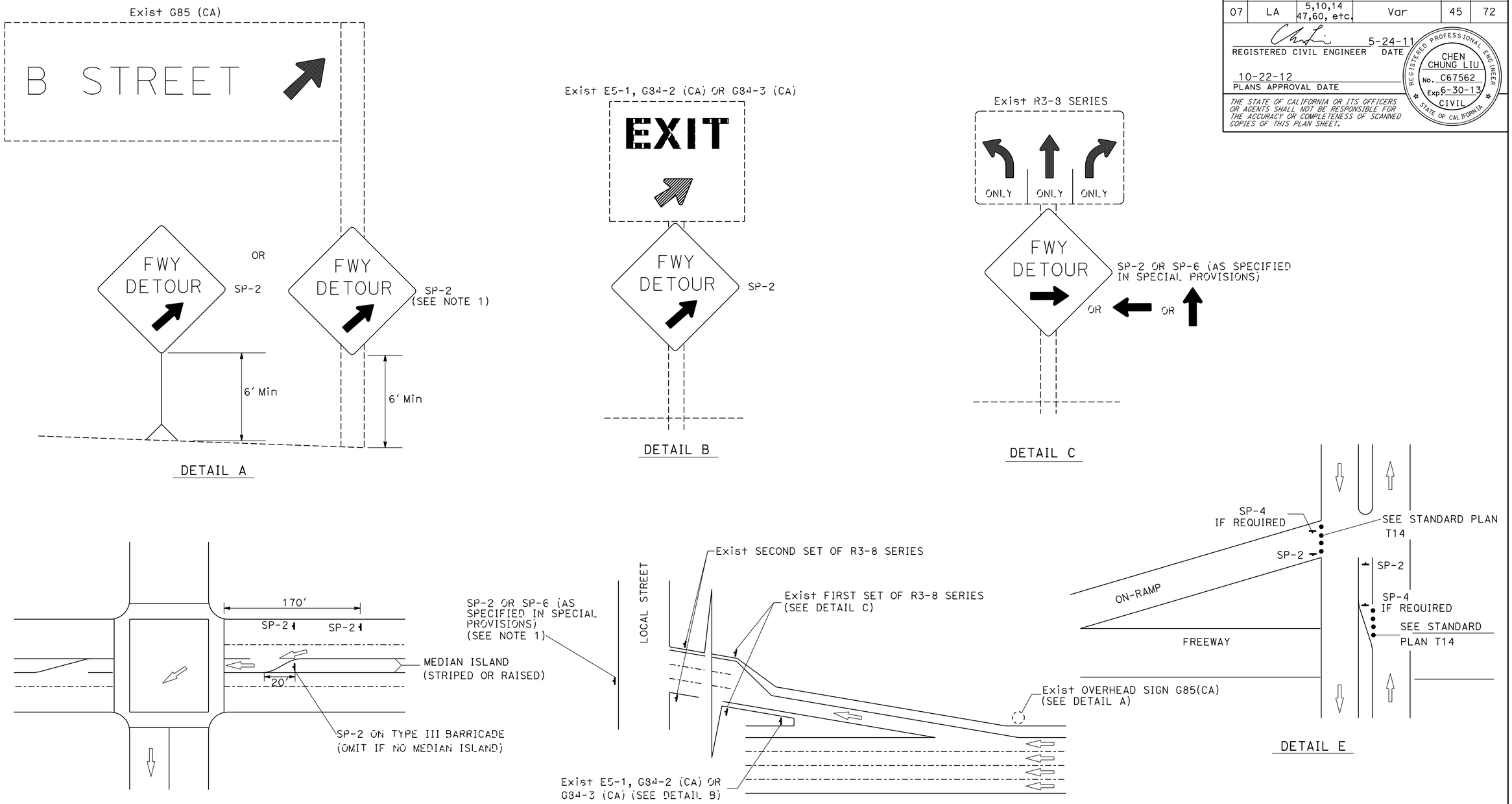

TYPICAL DETOUR SIGN INSTALLATION AT OFF-RAMP

NOTES:

1. TEMPORARY SIGNS MAY BE STRAPPED ON EXISTING ELECTROLIER, SIGNAL POSTS, OR SIGN POSTS.

ABBREVIATIONS

(CA) CALIFORNIA CODE

LEGENDS

- TRAFFIC CONE
- TEMPORARY SIGN
- DIRECTION OF TRAVEL
- EXISTING OVERHEAD SIGN

TRAFFIC HANDLING DETAILS
TRAFFIC CONTROL SYSTEM FOR DETOUR SIGN INSTALLATION ALONG DESIGNATED DETOUR ROUTE
SHEET 2 OF 2

NO SCALE

THD-4

STATE OF CALIFORNIA - DEPARTMENT OF TRANSPORTATION
Caltrans® DTM

FUNCTIONAL SUPERVISOR: MARTIN OREGEL
CALCULATED-DESIGNED BY: ALBERT K YU
CHECKED BY: JOCELYN C CHIANG
REVISED BY: JC
DATE REVISED: 7/10

LAST REVISION 10-09-12
DATE PLOTTED => 02-JAN-2013
TIME PLOTTED => 19:24

Dist	COUNTY	ROUTE	POST MILES TOTAL PROJECT	SHEET No.	TOTAL SHEETS
07	LA	5,10,14 47,60,etc.	Var	46	72

REGISTERED CIVIL ENGINEER 8-30-12 DATE

10-22-12
PLANS APPROVAL DATE

REGISTERED PROFESSIONAL ENGINEER REFUGIO DOMINGUEZ No. 50820 Exp 9-30-13 CIVIL STATE OF CALIFORNIA

THE STATE OF CALIFORNIA OR ITS OFFICERS OR AGENTS SHALL NOT BE RESPONSIBLE FOR THE ACCURACY OR COMPLETENESS OF SCANNED COPIES OF THIS PLAN SHEET.

WATER POLLUTION CONTROL QUANTITIES

ITEM DESCRIPTION	UNIT	QUANTITY
TEMPORARY SILT FENCE	LF	2000
TEMPORARY DRAINAGE INLET PROTECTION	EA	10
TEMPORARY FIBER ROLL	LF	1010

ROADWAY QUANTITIES

LOCATION	DESCRIPTION	CONCRETE BARRIER (TYPE 736B)	18" CORRUGATED STEEL PIPE CONDUIT (.079" THICK)	SHOTCRETE	STRUCTURE EXCAVATION (SOIL NAIL WALL)	SOIL NAIL	ROCK SLOPE RPOTECTION FABRIC (CLASS 8)	MINOR CONCRETE (Misc CONSTRUCTION)	RECONSTRUCT CHAIN LINK FENCE	REMOVE CONCRETE (CHANNEL)	ROADWAY EXCAVATION	ROADWAY EXCAVATION (TYPE Z-2) (AERIALLY DEPOSITED LEAD)	IMPORTED BORROW	CLASS 3 AGGREGATE BASE	CLASS D AGGREGATE BASE	HOT MIX ASPHALT (TYPE A)	PLACE HMA (Misc AREA)	ROCK SLOPE PROTECTION (NO. 3, METHOD B)	SLOPE PAVING (CONCRETE)	RELOCATE ROADSIDE SIGN-TWO POST	ROCK BLANKET	CEMENT TREATED PERMEABLE BASE	MULCH (N)	LEAN CONCRETE BASE	REMOVE PIPE	DITCH EXCAVATION	EROSION CONTROL (HYDROSEED)
		LF	LF	CY	CY	LF	SQYD	CY	LF	CY	CY	CY	CY	CY	CY	TON	SQYD	CY	CY	EA	SQYD	CY	CY	CY	LF	CY	SQFT
1	ON ROUTE 5 AT MAGIC MOUNTAIN PARKWAY OFF-RAMPS						11	31					20					18		1			83			15	
2	ON ROUTE 5 AT ROUTE 126 SEPARATION						10	3					1					11								11	
3	ON WB 10 AT EASTERN Ave OFF-RAMP		15	34				3					3												15		
4	ON SB ROUTE 14 AT SAND CANYON Rd ON-RAMP			64	10	3300																					
5	ON SB ROUTE 47 AT HARBOR Blvd OFF-RAMP	144																									
6	PARK & RIDE AREA BETWEEN NB ROUTE 57 AND WB ROUTE 60							20		20																	
7	ON ROUTE 60 AT GOLDEN SPRINGS DRIVE			70					320				10						72				30				
8	ON WB ROUTE 60 AT GAREY Ave OFF-RAMP							8		7								2					97			3	
9	BETWEEN THE WB ROUTE 60 ON-RAMP AND CONNECTOR RAMP TO EB ROUTE 71 AT GAREY Ave										550				275							275					56000
10	ON SB ROUTE 110 AT MacARTHUR Ave OC																		19								
11	ON ROUTE 110 AT RTE 405 SEPARATION																		340		1800		10				
12	ON EB ROUTE 134 AT ARROYO SECO SEPARATION		75	12									8						12						75		
13	ON ROUTE 210 AT FAIR OAKS Ave OC							3					3						16								
14	ON EB ROUTE 210 AT LOS ROBLES Ave OC																		14								
15	ON SB ROUTE 405 AT LA CIENEGA BLVD UC										50	30		20		36	6							10			
16	ON ROUTE 605 AT ROSECRANS Ave UC							2	70				10						40								
17	ON ROUTE 605 AT FIRESTONE Blvd UC							8	600										300								
18	ON RTE 60/605 SEPARATION																		70								
	TOTAL	144	90	180	10	3300	21	78	990	27	600	30	55	20	275	36	6	31	883	1	1800	275	220	10	90	29	56000

(N) NOT A PAY ITEM

SUMMARY OF QUANTITIES

Q-1

STATE OF CALIFORNIA - DEPARTMENT OF TRANSPORTATION
Caltrans® OFFICE OF DESIGN D

FUNCTIONAL SUPERVISOR: KAREN FONG
CALCULATED-DESIGNED BY: MOHAMMAD MOHSENZADEH
CHECKED BY: REFUGIO DOMINGUEZ
REVISED BY
DATE REVISED

LAST REVISION 10-09-12
DATE PLOTTED => 02-JAN-2013
TIME PLOTTED => 19:24

Dist	COUNTY	ROUTE	POST MILES TOTAL PROJECT	SHEET No.	TOTAL SHEETS
07	LA	5,10,14, 47,60,etc.	Var	47	72

Ron Russak 8-30-12
LICENSED LANDSCAPE ARCHITECT

10-22-12
PLANS APPROVAL DATE

LICENSED LANDSCAPE ARCHITECT RON RUSSAK No. 2186 Signature 8-31-13 Renewal Date 7-01-11 Date STATE OF CALIFORNIA

THE STATE OF CALIFORNIA OR ITS OFFICERS OR AGENTS SHALL NOT BE RESPONSIBLE FOR THE ACCURACY OR COMPLETENESS OF SCANNED COPIES OF THIS PLAN SHEET.

PLANT LIST AND PLANTING SPECIFICATIONS

PLANT GROUP	PLANT No.	SYMBOL	BOTANICAL NAME	COMMON NAME	SIZE	QUANTITY EACH	HOLE SIZE (INCH) Dia	HOLE SIZE (INCH) DEPTH	BASIN TYPE	IRON SULFATE	SOIL AMEND ①	COMMERCIAL FERTILIZER ① PLANTING	COMMERCIAL FERTILIZER ① PLT ESTB	BASIN MULCH	STAKING	PLANTING LIMITS MINIMUM DISTANCE (Ft) FROM TRVD WAY	PVMT	FENCE	WALL	PAVED DITCH	EARTH DITCH	ON CENTER (Ft)	REMARKS
A	1		BACCHARIS PILULARIS	COYOTE BRUSH	NO. 1	32	②	②	I	—	1 CF	4 oz	4 oz	1.4 CF	—	—	20	20	20	20	22	15	SHRUB
	2		MUHLENBERGIA RIGENS	DEER GRASS	NO. 1	265	②	②	I	—	1 CF	4 oz	4 oz	1.4 CF	—	2	—	—	—	2	2	3	GRASS
B	3		FREMONTODENDRON CALIFORNICUM	FLANNEL BUSH	NO. 5	23	②	②	I	—	1 CF	4 oz	4 oz	1.4 CF	—	—	15	10	10	10	12	10	SHRUB
	4		RHAPHIOLEPIS INDICA 'SPRINGTIME'	INDIAN HAWTHORN 'SPRINGTIME'	NO. 5	22	②	②	I	—	1 CF	4 oz	4 oz	1.4 CF	—	—	8	8	8	6	10	6	SHRUB
	5		RHAMNUS CALIFORNICA 'R.BONITA LINDA'	CALIFORNIA COFFEEBERRY	NO. 5	28	②	②	I	—	1 CF	4 oz	4 oz	1.4 CF	—	—	15	15	10	10	12	15	SHRUB
U	6		CERCIS OCCIDENTALIS	WESTERN REDBUD	NO. 15	10	②	②	I	—	2 CF	8 oz	8 oz	2.1 CF	—	40	—	20	20	10	12	—	TREE
	7		SAMBUCUS MEXICANA	BLUE ELDERBERRY	NO. 15	6	②	②	I	—	2 CF	8 oz	8 oz	2.1 CF	—	40	—	20	20	10	12	—	TREE

APPLICABLE WHEN CIRCLED:

① - Quantities shown are "per plant" unless shown as SQFT or SQYD application rates.
② - Sufficient to receive root ball.
3 - Does not apply to mulch areas.
4 - As shown on plans.
5 - Unless otherwise shown on plans.
6 - See detail.
7 - See Special Provisions.

LEGEND

LIMIT OF MULCH (3" THICK)

RC — LIMIT OF ROADSIDE CLEARING (Remove Exist plants except trees Unless otherwise noted)

NOTE:

Underlined portions of botanical name indicate abbreviations used on Planting Plans.

PLANT LIST

PL-1

REVISED BY | DATE REVISED
BONGKOD LOHMONGKOL | RON RUSSAK
CALCULATED-DESIGNED BY | CHECKED BY
SENIOR LANDSCAPE ARCHITECT | RON RUSSAK
STATE OF CALIFORNIA - DEPARTMENT OF TRANSPORTATION
Caltrans LANDSCAPE ARCHITECTURE

LAST REVISION 10-05-12 | DATE PLOTTED => 02-JAN-2013 | TIME PLOTTED => 19:24

Dist	COUNTY	ROUTE	POST MILES TOTAL PROJECT	SHEET No.	TOTAL SHEETS
07	LA	5,10,14, 47,60,etc.	Var	48	72

Ron Russak 8-30-12
LICENSED LANDSCAPE ARCHITECT

10-22-12
PLANS APPROVAL DATE

LICENSED LANDSCAPE ARCHITECT RON RUSSAK No. 2186 Signature 8-31-13 Renewal Date 7-01-11 Date STATE OF CALIFORNIA

THE STATE OF CALIFORNIA OR ITS OFFICERS OR AGENTS SHALL NOT BE RESPONSIBLE FOR THE ACCURACY OR COMPLETENESS OF SCANNED COPIES OF THIS PLAN SHEET.

NOTES:

1. EXISTING UTILITIES HAVE NOT BEEN PLOTTED ON THESE PLANS
2. FOR ACCURATE RIGHT OF WAY DATE, CONTACT RIGHT OF WAY ENGINEERING AT THE DISTRICT OFFICE

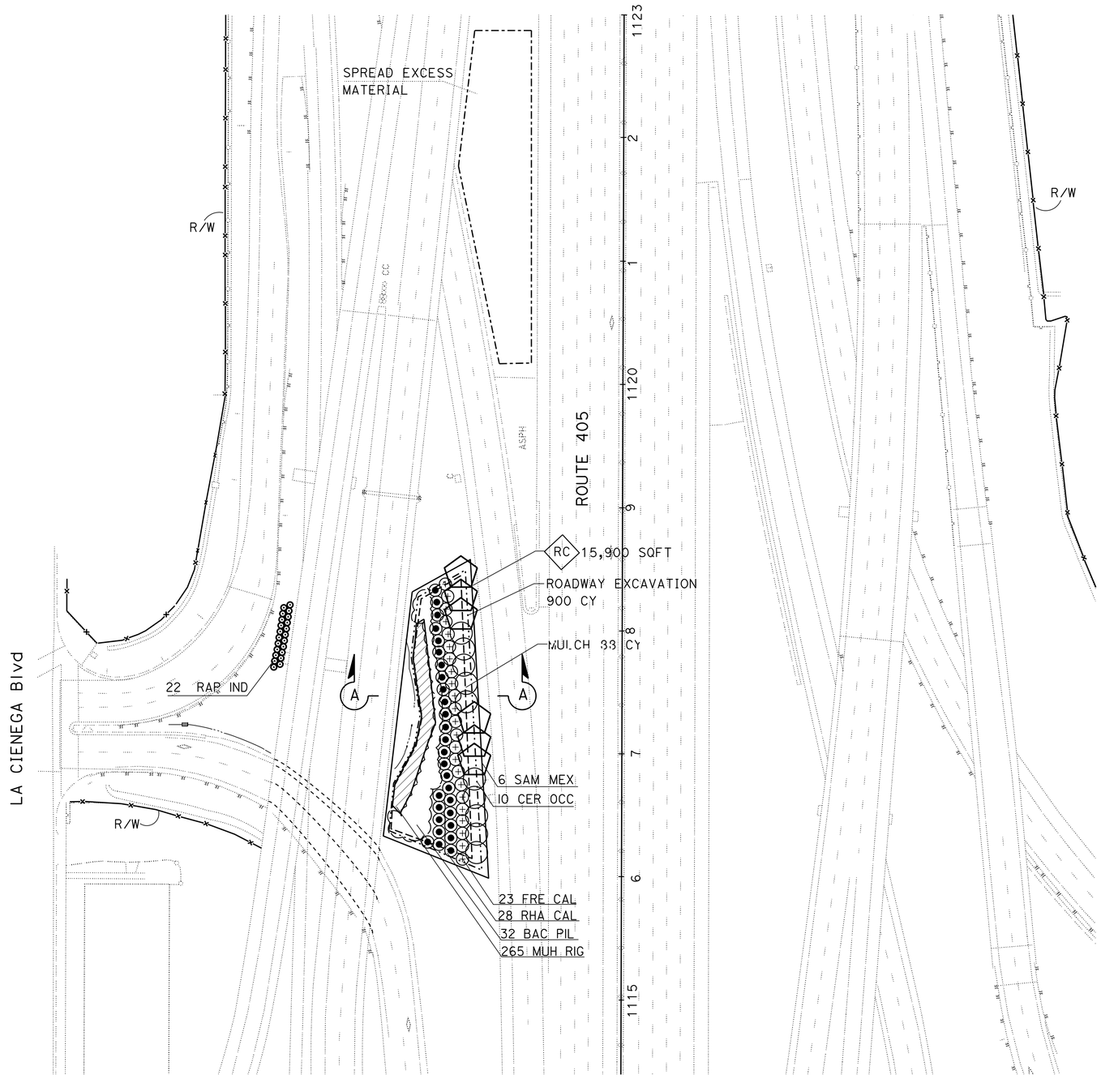

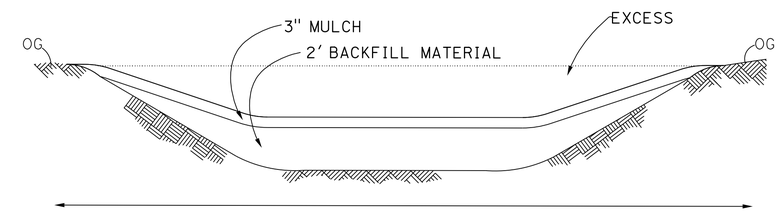

TYPICAL SECTION A-A

BACKFILL MATERIAL QUANTITIES

NATURAL SANDS	450 CY
COMPOST, INCORPORATE	1,200 SQYD
LOCAL TOPSOIL	180 CY

HAUL AWAY LOCAL EXCAVATED SOIL = 720 CY

APPROVED FOR PLANTING WORK ONLY

PLANTING PLAN

SCALE: 1" = 50'

PP-1

STATE OF CALIFORNIA - DEPARTMENT OF TRANSPORTATION
Caltrans LANDSCAPE ARCHITECTURE

SENIOR LANDSCAPE ARCHITECT: RON RUSSAK

CALCULATED-DESIGNED BY: BONGKOD LOHMONGKOL
CHECKED BY: RON RUSSAK

REVISED BY
DATE REVISED

LAST REVISION 10-05-12
DATE PLOTTED => 02-JAN-2013
TIME PLOTTED => 19:24

Dist	COUNTY	ROUTE	POST MILES TOTAL PROJECT	SHEET No.	TOTAL SHEETS
07	LA	5,10,14, 47,60,etc.	Var	49	72

Ron Russak 8-30-12
LICENSED LANDSCAPE ARCHITECT

10-22-12
PLANS APPROVAL DATE

THE STATE OF CALIFORNIA OR ITS OFFICERS OR AGENTS SHALL NOT BE RESPONSIBLE FOR THE ACCURACY OR COMPLETENESS OF SCANNED COPIES OF THIS PLAN SHEET.

LICENSED LANDSCAPE ARCHITECT
RON RUSSAK No. 2186
Signature
8-30-13
Renewal Date
7-01-11
Date
STATE OF CALIFORNIA

NOTES:

1. EXISTING UTILITIES HAVE NOT BEEN PLOTTED ON THESE PLANS
2. FOR ACCURATE RIGHT OF WAY DATE, CONTACT RIGHT OF WAY ENGINEERING AT THE DISTRICT OFFICE
3. CONNECT CNC FROM EXISTING CONTROLLER TO VALVES
4. LOCATE AV AT HIGHTEST POINT.
5. LOCATE STEEL SOIL STAPLES ALONG PPI @ 3, C-C
6. SECURE FITTING WITH 2 STEEL SOIL STAPLES.

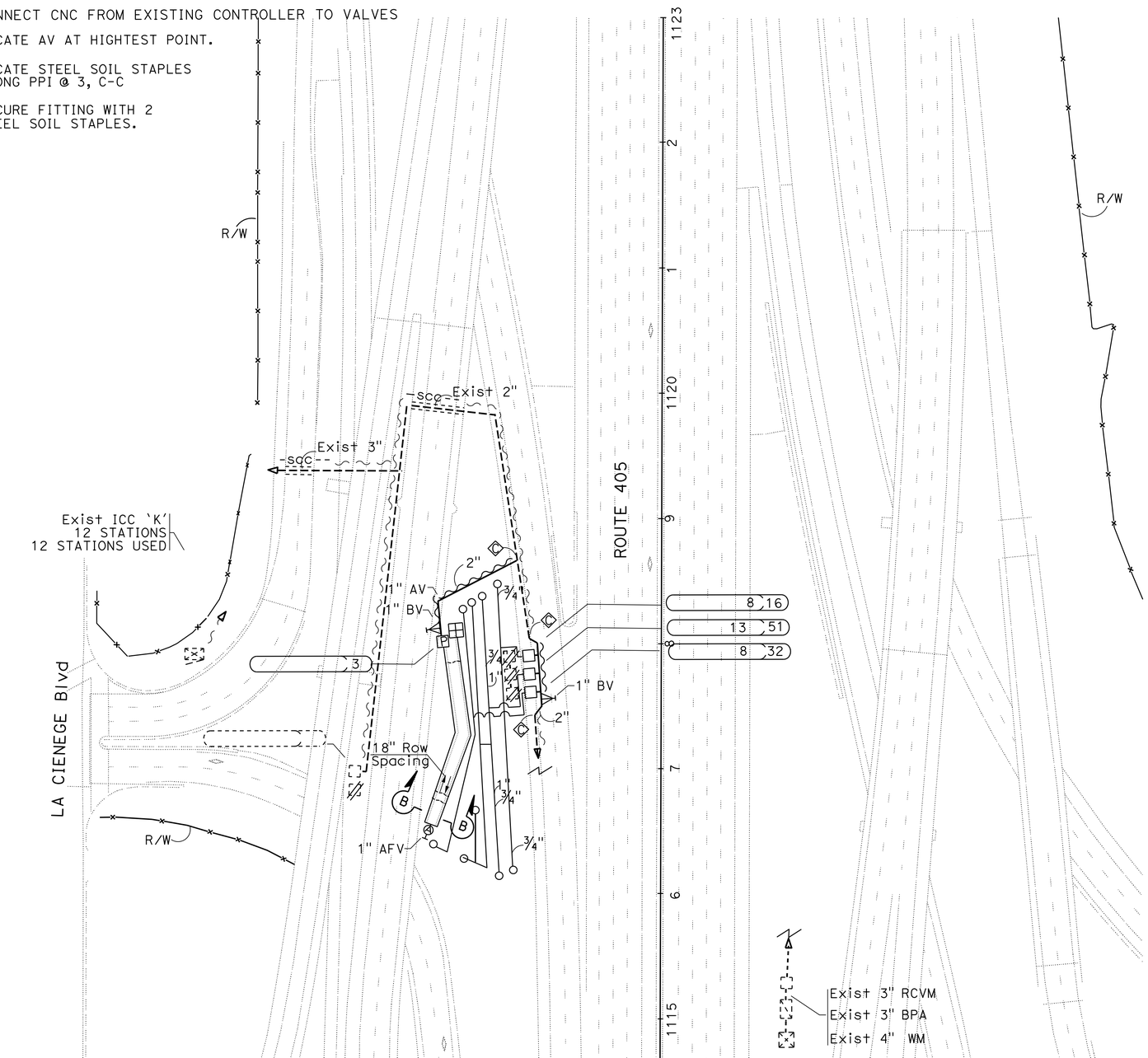

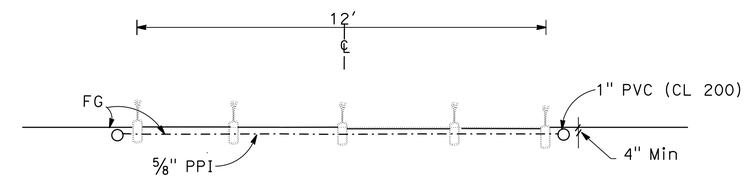

DRIP IRRIGATION SECTION B-B

IRRIGATION PLAN

SCALE: 1" = 50'

IP-1

APPROVED FOR IRRIGATION WORK ONLY

STATE OF CALIFORNIA - DEPARTMENT OF TRANSPORTATION
Caltrans® LANDSCAPE ARCHITECTURE
SENIOR LANDSCAPE ARCHITECT: RON RUSSAK
CALCULATED-DESIGNED BY: BONGKOD LOHMONGKOL
CHECKED BY: RON RUSSAK
REVISED BY
DATE REVISED

LAST REVISION 10-09-12
DATE PLOTTED => 02-JAN-2013
TIME PLOTTED => 19:24

Dist	COUNTY	ROUTE	POST MILES TOTAL PROJECT	SHEET No.	TOTAL SHEETS
07	LA	5,10,14, 47,60,etc.	Var	50	72

Ron Russak 8-30-12
LICENSED LANDSCAPE ARCHITECT

10-22-12
PLANS APPROVAL DATE

THE STATE OF CALIFORNIA OR ITS OFFICERS OR AGENTS SHALL NOT BE RESPONSIBLE FOR THE ACCURACY OR COMPLETENESS OF SCANNED COPIES OF THIS PLAN SHEET.

LICENSED LANDSCAPE ARCHITECT — RON RUSSAK No. 2186 — Signature — 8-31-13 Renewal Date — 7-01-11 Date — STATE OF CALIFORNIA

SPRINKLER SCHEDULE

SYMBOL	TYPE	DESCRIPTION	SPRAY PATTERN	OPERATING PRESSURE (PSI)	PRESSURE COMPENSATING	PLUS/MINUS 5% ② DISCHARGE: GALLONS PER MINUTE (GPM)	GALLONS PER HOUR (GPH)	RADIUS (Ft)	WIDTH x LENGTH (Ft)	MATERIAL	INLET CONNECTION (NPT INCH)	POSITIVE-LOCKING ADJ ARC STOP	BACKSPLASH PREVENTER	DIFFUSER PIN	DISTANCE CONTROL FLAP	ADJ DISCHARGE	RISER: TYPE	MATERIAL: PLASTIC	GALVANIZED	SIZE (IPS INCH)	HEIGHT (INCH)	FLOW SHUTOFF DEVICE	SWING JOINT (TYPE)	RISER SUPPORT	SPRINKLER PROTECTOR (TYPE)	REMARKS
○	C-2	FLOOD BUBBLER	F	20	X	0.25	—	—	—	B/PL		—	—	—	—	—	V	—	—	—	—	—	—	—	—	
○	C-2	FLOOD BUBBLER	F	20	X	0.5	—	—	—	B/PL		—	—	—	—	—	V	—	—	—	—	—	—	—	—	
⌐.⌐	D-1	EMITTER	—	15	X	—	0.9	—	—	PL	5/8"	—	—	—	—	—	—	—	—	—	—	—	—	—	—	①

X IN BOX DENOTES REQUIREMENT

APPLICABLE WHEN CIRCLED BELOW:

① - See Special Provisions.
② - If a pressure compensating device is specified, the discharge and radii shown reflect its use.
3 - Arc Stop shall be fitted with a nut and bolt.
4 - Vinyl-coated cast iron housing.
5 - Swing Joints required adjacent to shoulders, curbs, sidewalks, and dikes.
6 - Unless otherwise shown on plans.

ABBREVIATIONS

F — full circle
P — part circle
F/P — full/part circle
Q — quarter circle
T — third circle
H — half circle
TT — two third circle
TQ — three quarter circle
CST — center strip
SST — side strip
EST — end strip
Ft — feet/foot
GPM — gallons per minute
GPH — gallons per hour
Adj — adjustable
PL — plastic
B/B — brass/bronze
B/PL — brass/plastic
B/B/PL — brass/bronze/plastic
NPT — national pipe thread
IPS — iron pipe size
PSI — pounds per square inch

EXISTING	PROPOSED	ITEM DESCRIPTION
		AIR/VACUUM RELIEF VALVE (AV)
		AUTOMATIC FLUSH VALVE (AFV)

SPRINKLERS (C-2) SIZING CHART: 0.25 GPM (SHRUBS)

NUMBER OF SPRINKLERS	SIZE OF PIPE
1---40	3/4"
41---64	1"
65---104	1 1/4"
105---144	1 1/2"

SPRINKLERS (C-2) SIZING CHART: 0.5 GPM (TREES)

NUMBER OF SPRINKLERS	SIZE OF PIPE
1---20	3/4"
21---32	1"
33---52	1 1/4"
53---70	1 1/2"

SPRINKLER SCHEDULE

SCALE: 1" = 50'

LD-1

REVISED BY | DATE REVISED
BONGKOD LOHMONGKOL | RON RUSSAK
CALCULATED-DESIGNED BY | CHECKED BY
SENIOR LANDSCAPE ARCHITECT | RON RUSSAK
STATE OF CALIFORNIA - DEPARTMENT OF TRANSPORTATION
Caltrans® LANDSCAPE ARCHITECTURE

LAST REVISION 10-09-12 | DATE PLOTTED => 02-JAN-2013 | TIME PLOTTED => 19:24

Dist	COUNTY	ROUTE	POST MILES TOTAL PROJECT	SHEET No.	TOTAL SHEETS
07	LA	5,10,14, 47,60,etc.	Var	51	72

Ron Russak 8-30-12
LICENSED LANDSCAPE ARCHITECT

10-22-12
PLANS APPROVAL DATE

LICENSED LANDSCAPE ARCHITECT
RON RUSSAK No. 2186
Signature
8-31-13
Renewal Date
7-01-11
Date
STATE OF CALIFORNIA

THE STATE OF CALIFORNIA OR ITS OFFICERS OR AGENTS SHALL NOT BE RESPONSIBLE FOR THE ACCURACY OR COMPLETENESS OF SCANNED COPIES OF THIS PLAN SHEET.

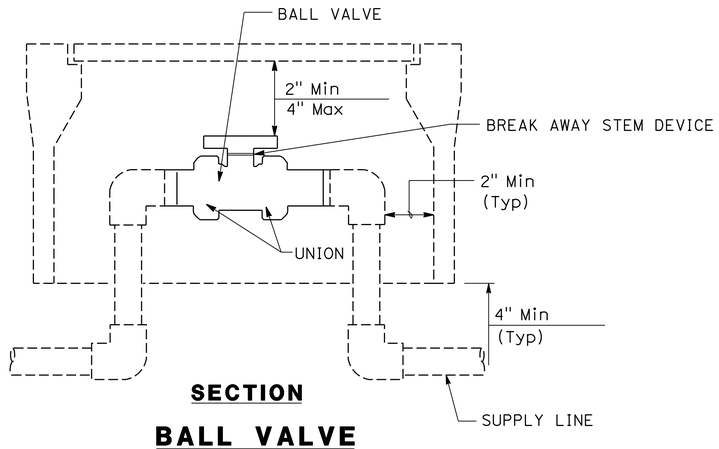

SECTION

BALL VALVE

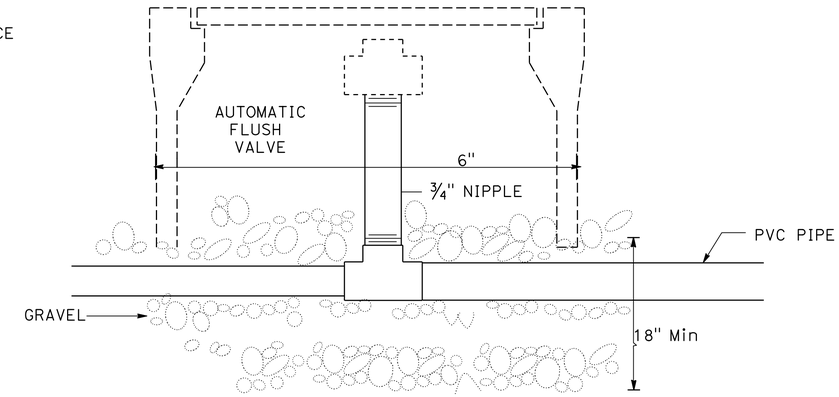

SECTION

AUTOMATIC FLUSH VALVE

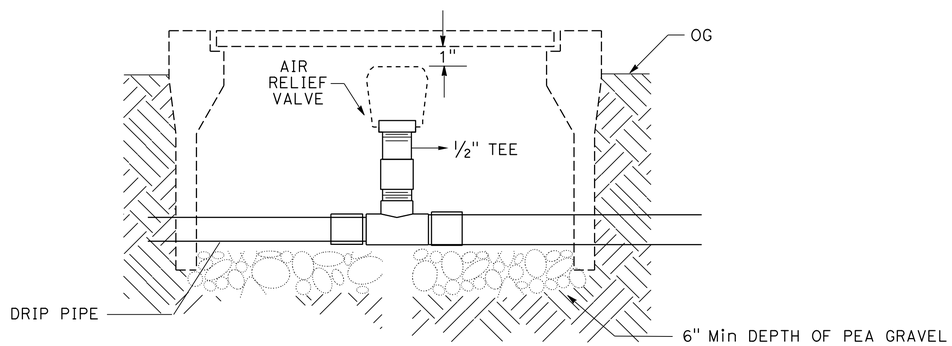

SECTION

AIR/VACUUM RELIEF VALVE

LANDSCAPE DETAILS

NO SCALE

LD-2

REVISED BY	DATE REVISED
BONGKOD LOHMONGKOL	RON RUSSAK

CALCULATED-DESIGNED BY	CHECKED BY

SENIOR LANDSCAPE ARCHITECT
RON RUSSAK

STATE OF CALIFORNIA - DEPARTMENT OF TRANSPORTATION
Caltrans®
LANDSCAPE ARCHITECTURE

LAST REVISION 10-09-12
DATE PLOTTED => 02-JAN-2013
TIME PLOTTED => 19:24

DIST	COUNTY	ROUTE	POST MILES TOTAL PROJECT	SHEET NO.	TOTAL SHEETS
07	LA	5,10,14, 47,60,etc	Var	52	72

Glenn De Cou
REGISTERED CIVIL ENGINEER

June 5, 2009
PLANS APPROVAL DATE

REGISTERED PROFESSIONAL ENGINEER Glenn DeCou No. C34547 Exp. 9-30-09 CIVIL STATE OF CALIFORNIA

The State of California or its officers or agents shall not be responsible for the accuracy or completeness of electronic copies of this plan sheet.

To accompany plans dated 10-22-12

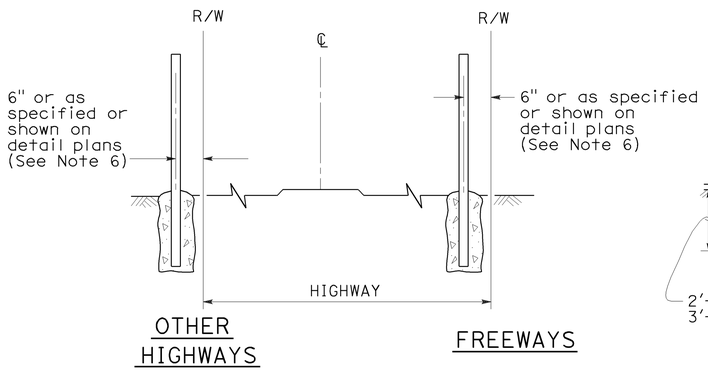

FENCE LOCATION

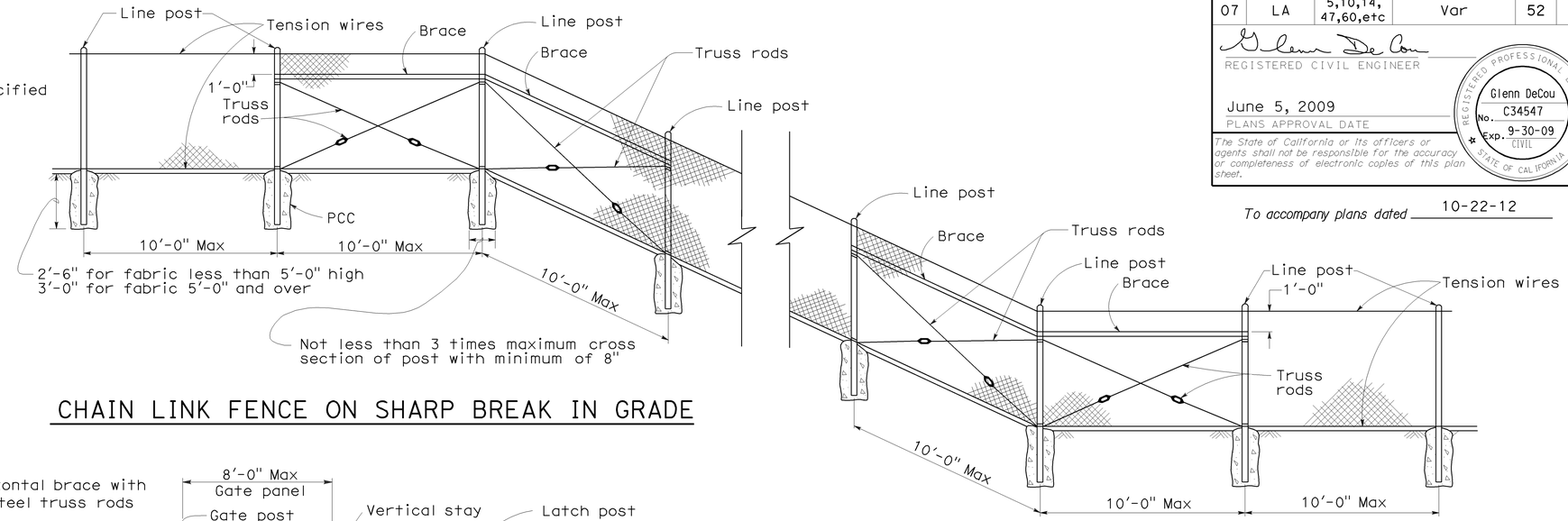

CHAIN LINK FENCE ON SHARP BREAK IN GRADE

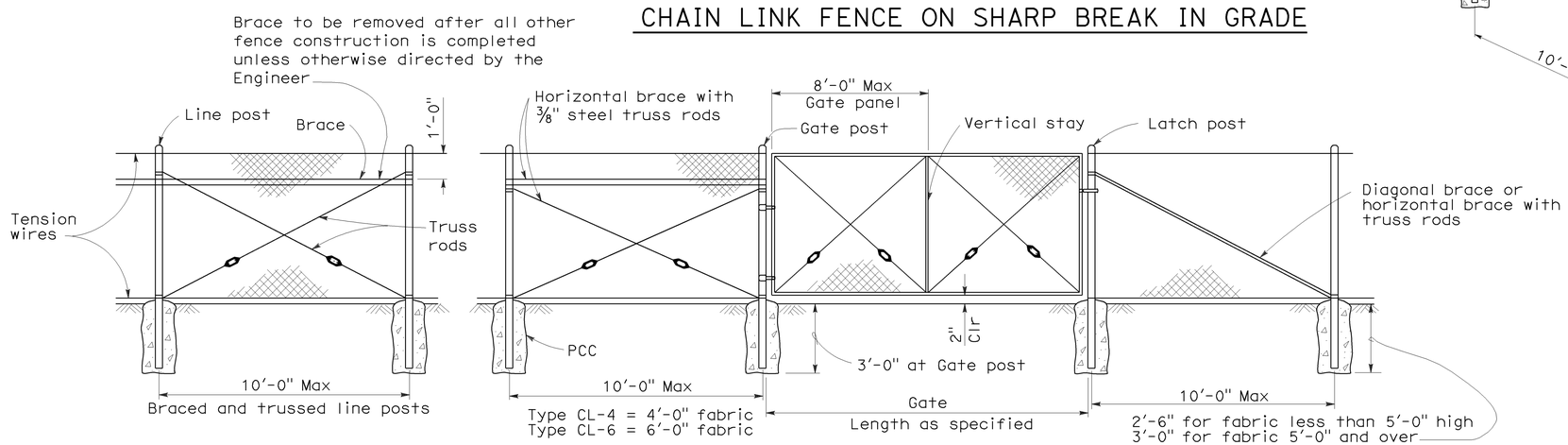

CHAIN LINK GATE INSTALLATION

GATE POST			
FENCE HEIGHT	GATE WIDTHS	NOMINAL ID	WEIGHT PER FOOT
6'-0" and Less	Up thru 6'-0"	2½"	4.95 LB
	Over 6'-0" thru 12'-0"	4"	10.79 LB
	Over 12'-0" thru 18'-0"	5"	14.62 LB
	Over 18'-0" to 24'-0" Max	6"	18.97 LB
Over 6'-0"	Up thru 6'-0"	3"	7.58 LB
	Over 6'-0" thru 12'-0"	5"	14.62 LB
	Over 12'-0" thru 18'-0"	6"	18.97 LB
	Over 18'-0" to 24'-0" Max	8"	28.55 LB

Above post dimensions and weights are minimums. Larger sizes may be used on approval of the Engineer.

NOTES:

1. The below table shows examples of post and brace sections which may comply with the Specifications.
2. Sections shown in the tables must also comply with the strength requirements and other provisions of the Specifications.
3. Other sections which comply with the strength requirements and other provisions of the Specifications may be used on approval of the Engineer.
4. Options exercised shall be uniform on any one project.
5. Dimensions shown are nominal.
6. Offset to be 2'-0" at monument locations, measured at right angles to R/W lines. Taper to achieve offset to be at least 20'-0" long.

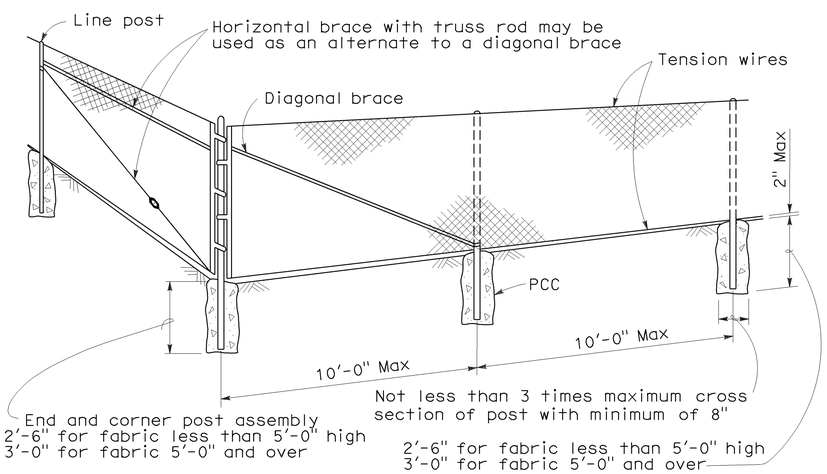

CORNER POST

TYPICAL MEMBER DIMENSIONS (See Notes)											
FENCE HEIGHT	LINE POSTS			END, LATCH & CORNER POSTS				BRACES			
	ROUND ID	H	ROLL FORMED	ROUND ID	ROLL FORMED			ROUND ID	H	ROLL FORMED	
6' & less	1½"	1⅞" × 1⅝"	1⅞" × 1⅝"	2"	3½" × 3½"	2" × 1¾"		1¼"	1½" × 1 5/16"	1⅝" × 1¼"	1¾" × 1¼"
Over 6'	2"	2¼" × 2"	2" × 1¾"	2½"	3½" × 3½"	2½" × 2½"		1¼"	1½" × 1 5/16"	1⅝" × 1¼"	1¾" × 1¼"

STATE OF CALIFORNIA
DEPARTMENT OF TRANSPORTATION

CHAIN LINK FENCE

NO SCALE

RSP A85 DATED JUNE 5, 2009 SUPERSEDES STANDARD PLAN A85
DATED MAY 1, 2006 - PAGE 111 OF THE STANDARD PLANS BOOK DATED MAY 2006.

REVISED STANDARD PLAN RSP A85

2006 REVISED STANDARD PLAN RSP A85

5-7-09

DIST	COUNTY	ROUTE	POST MILES TOTAL PROJECT	SHEET NO.	TOTAL SHEETS
07	LA	5,10,14, 47,60,etc	Var	53	72

Glenn DeCou
REGISTERED CIVIL ENGINEER

June 5, 2009
PLANS APPROVAL DATE

REGISTERED PROFESSIONAL ENGINEER Glenn DeCou No. C34547 Exp. 9-30-09 CIVIL STATE OF CALIFORNIA

The State of California or its officers or agents shall not be responsible for the accuracy or completeness of electronic copies of this plan sheet.

To accompany plans dated 10-22-12

NOTES:

1. H is 2'-6" for fabric less than 5'-0" high.
   H is 3'-0" for fabric 5'-0" and over.
2. T is not less than 3 times maximum cross section of post with minimum of 8".
3. Arms with barbed wire to be used where shown on plans.
4. See Revised Standard Plan RSP A85 for Chain Link Fencing dimensions.
5. Reinforcing must comply with ASTM A 706.
6. See Detail A on New Standard Plan NSP A86B for connection at headwall.

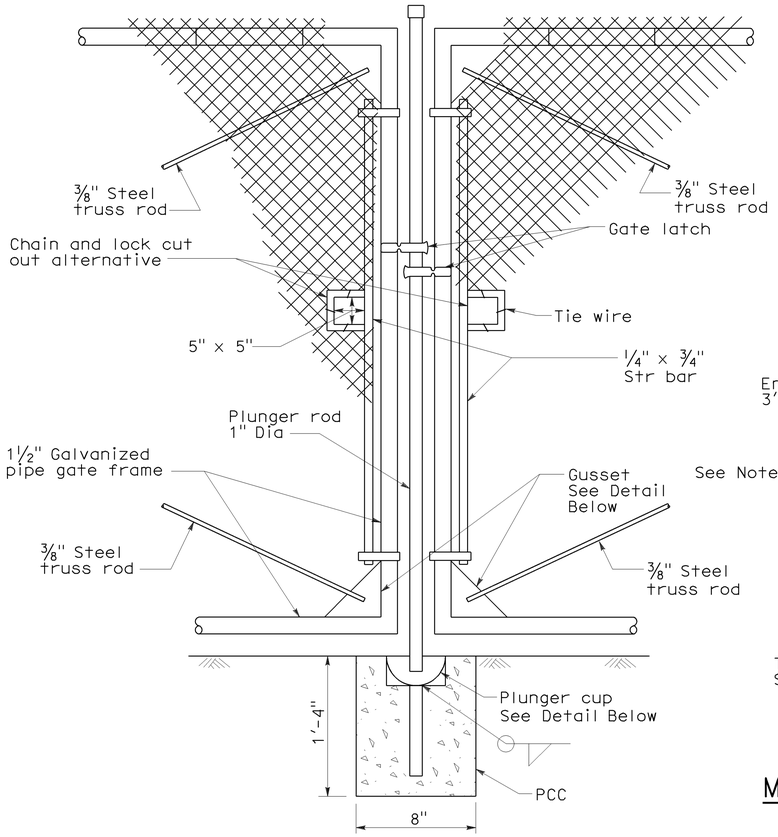

TYPICAL DOUBLE GATE REMOVABLE CENTER POST

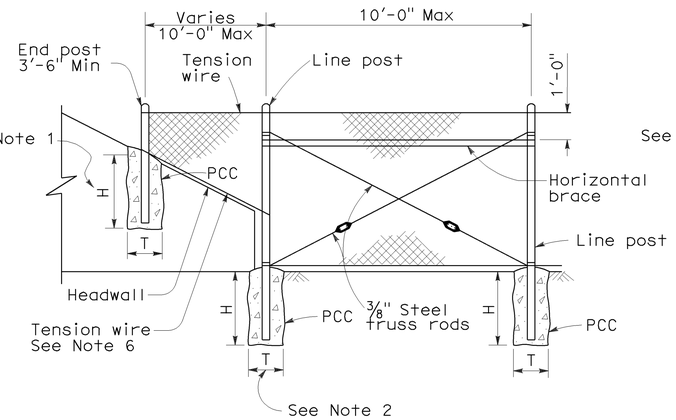

METHOD OF TYING FENCE TO HEADWALL

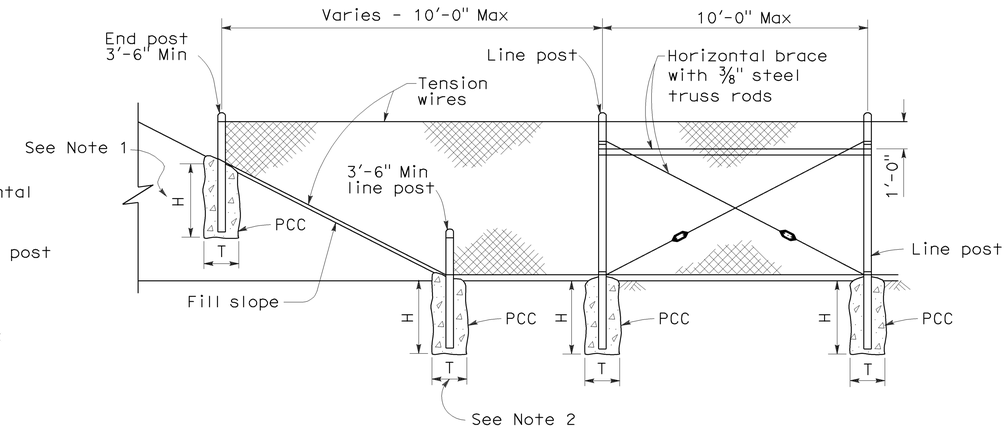

METHOD OF ERECTING FENCE FOR FILL SLOPE

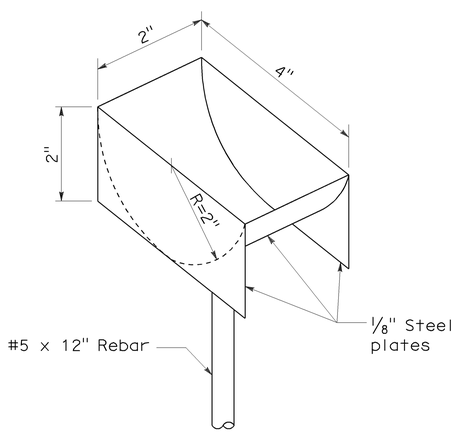

PLUNGER CUP DETAIL

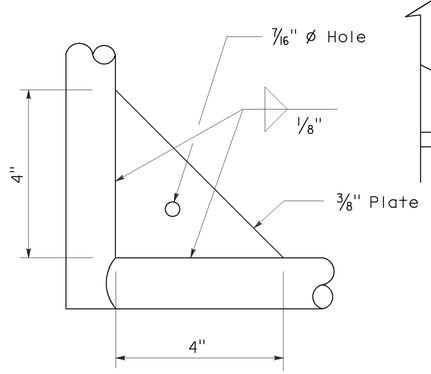

GUSSET DETAIL

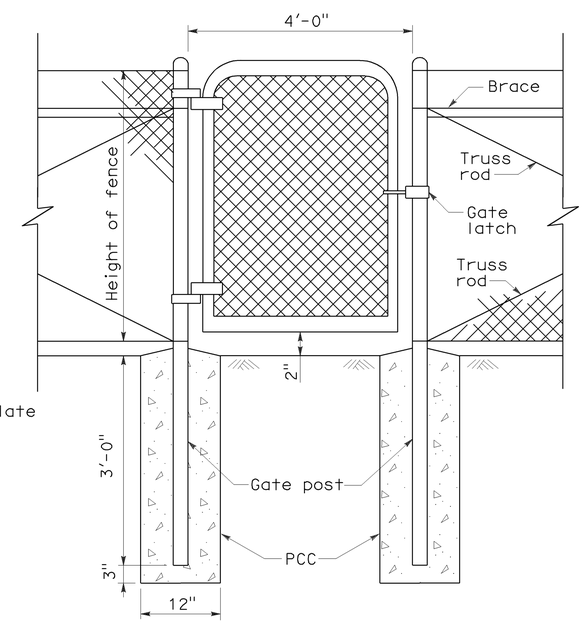

WALK GATE

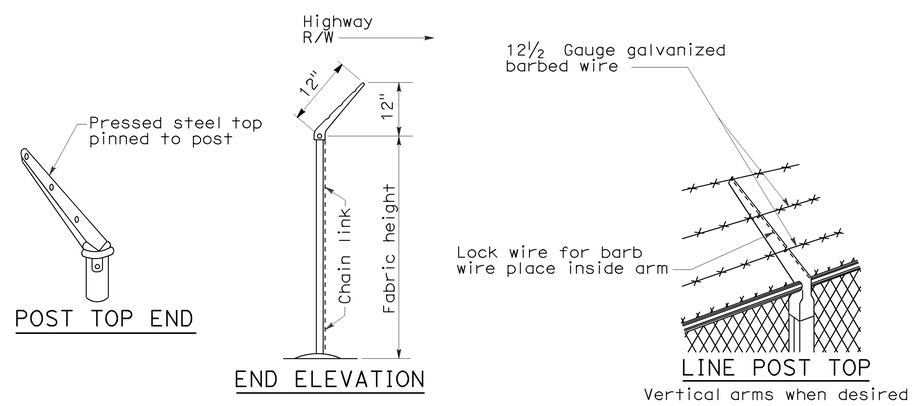

POST TOP END

END ELEVATION

LINE POST TOP
Vertical arms when desired

BARBED WIRE POST TOP
See Note 3

STATE OF CALIFORNIA
DEPARTMENT OF TRANSPORTATION

CHAIN LINK FENCE DETAILS

NO SCALE

NSP A85A DATED JUNE 5, 2009 SUPPLEMENTS THE STANDARD PLANS BOOK DATED MAY 2006.

NEW STANDARD PLAN NSP A85A

2006 NEW STANDARD PLAN NSP A85A

5-7-09

DIST	COUNTY	ROUTE	POST MILES TOTAL PROJECT	SHEET NO.	TOTAL SHEETS
07	LA	5,10,14, 47,60,etc	Var	54	72

REGISTERED CIVIL ENGINEER

June 5, 2009
PLANS APPROVAL DATE

REGISTERED PROFESSIONAL ENGINEER Glenn DeCou No. C34547 Exp. 9-30-09 CIVIL STATE OF CALIFORNIA

The State of California or its officers or agents shall not be responsible for the accuracy or completeness of electronic copies of this plan sheet.

To accompany plans dated 10-22-12

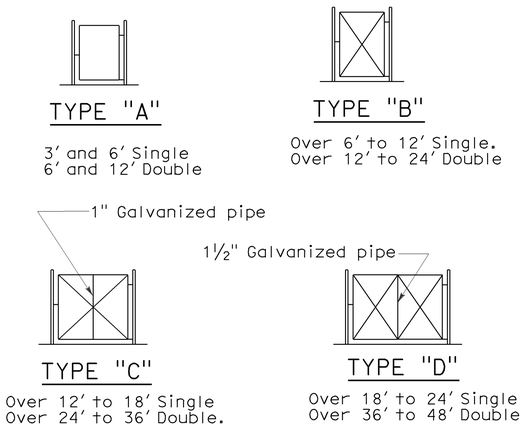

TYPICAL FRAMEWORK SHOWING NUMBER OF BAYS IN GATE

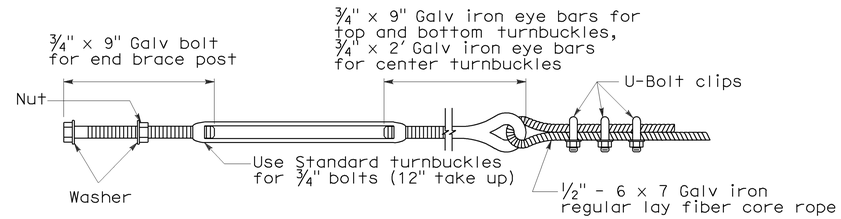

TURNBUCKLE A

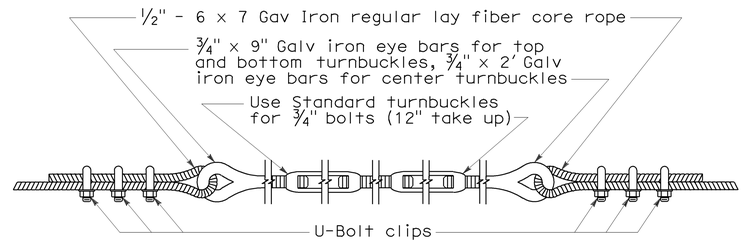

TURNBUCKLE B

NOTES:

1. All material for abutment connection to be galvanized.
2. The chain link fabric shall be replaced by barbed wire strands at 12" maximum centers between the double posts.
3. When the width of the culvert makes it necessary to anchor a post to the top of the culvert, a cast iron shoe or other device approved by the Engineer shall be used.
4. Fencing over stream and around headwall may also use Barbed Wire or Wire Mesh fencing with either wood post or steel post installation.
5. See Revised Standard Plan RSP A85 for Chain Link fence dimensions. See Standard Plan A86 for Barbed Wire and Wire Mesh fence dimensions and for wood post and steel post installation.

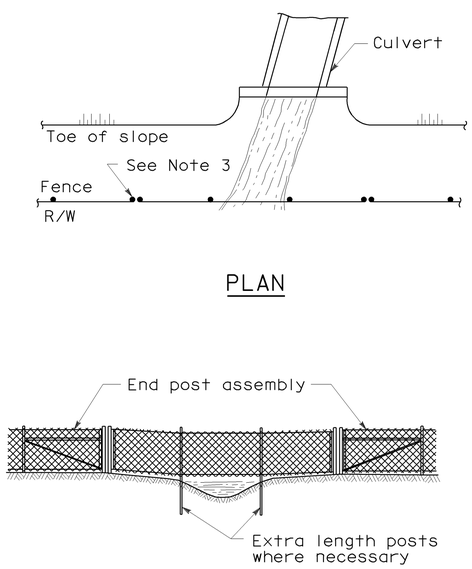

PLAN

ELEVATION

INSTALLATION OVER STREAM

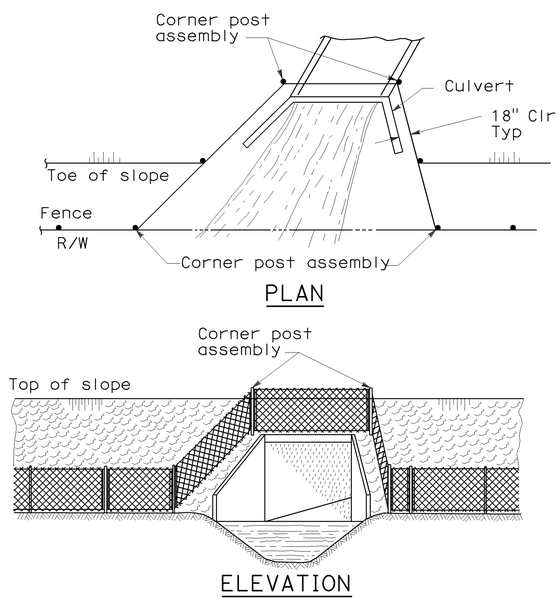

PLAN

ELEVATION

INSTALLATION AROUND HEADWALL

See Note 4

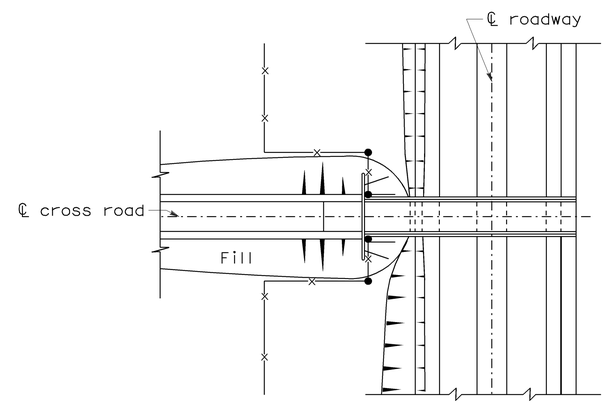

PLAN OF ROADWAY - UNDERPASS

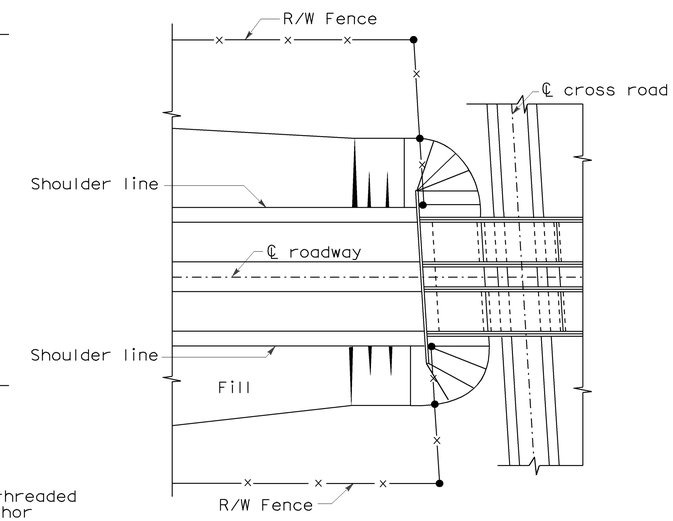

PLAN OF ROADWAY - OVERPASS

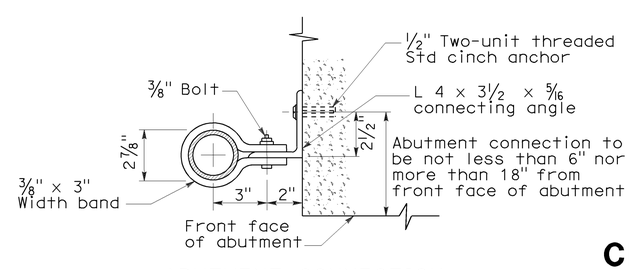

ABUTMENT CONNECTION

TYPICAL INSTALLATION AT BRIDGES

STATE OF CALIFORNIA
DEPARTMENT OF TRANSPORTATION

CHAIN LINK FENCE DETAILS

NO SCALE

NSP A85B DATED JUNE 5, 2009 SUPPLEMENTS THE STANDARD PLANS BOOK DATED MAY 2006.

NEW STANDARD PLAN NSP A85B

2006 NEW STANDARD PLAN NSP A85B

5-12-09

DIST	COUNTY	ROUTE	POST MILES TOTAL PROJECT	SHEET NO.	TOTAL SHEETS
07	LA	5,10,14, 47,60,etc	Var	55	72

REGISTERED CIVIL ENGINEER

November 17, 2006
PLANS APPROVAL DATE

REGISTERED PROFESSIONAL ENGINEER Michael Janzen No. 44788 Exp. 03-31-08 CIVIL STATE OF CALIFORNIA

The State of California or its officers or agents shall not be responsible for the accuracy or completeness of electronic copies of this plan sheet.

To accompany plans dated 10-22-12

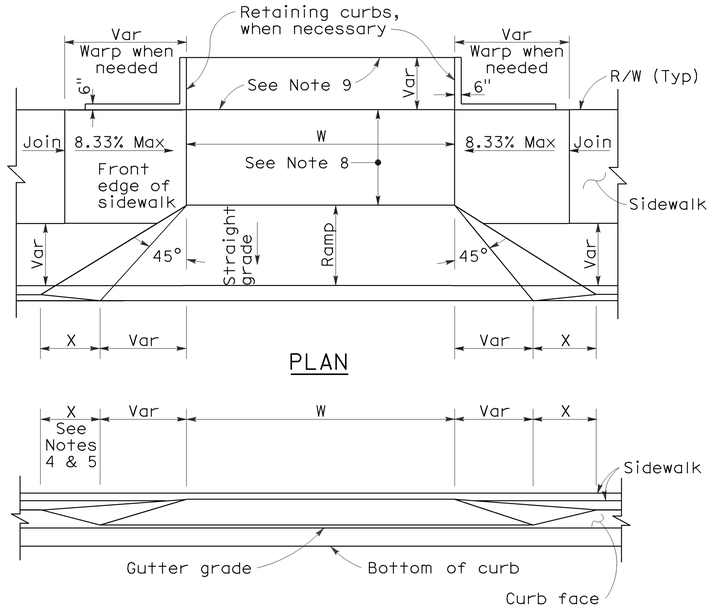

PLAN

ELEVATION

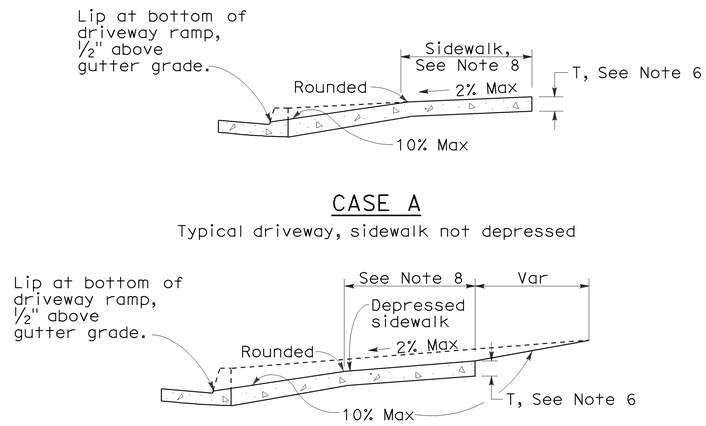

CASE A

Typical driveway, sidewalk not depressed

CASE B

Driveway with depressed sidewalk

SECTIONS

CURB QUANTITIES

TYPE	CUBIC YARDS PER LINEAR FOOT
A1-6	0.02585
A1-8	0.03084
A2-6	0.05903
A2-8	0.06379
A3-6	0.01036
A3-8	0.01435
B1-4	0.02185
B1-6	0.02930
B2-4	0.05515
B2-6	0.06171
B3-4	0.00641
B3-6	0.01074
B4	0.05709
D-4	0.04083
D-6	0.06804
E	0.06661

TABLE A

CURB TYPE	DIMENSIONS "H1"	"H2"	"W1"	"W2"
A1-6	1'-2"	6"	7½"	1½"
A1-8	1'-4"	8"	8"	2"
A2-6	1'-0"	6"	2'-7½"	1½"
A2-8	1'-2"	8"	2'-8"	2"
A3-6	6"	5"	7¼"	1¼"
A3-8	8"	7"	7¾"	1¾"
B1-4	1'-0"	4"	7½"	2½"
B1-6	1'-2"	6"	9"	4"
B2-4	10"	4"	2'-7½"	2½"
B2-6	1'-0"	6"	2'-9"	4"
B3-4	4"	3"	7"	2"
B3-6	6"	5"	8½"	3½"
D-4	10"	4"	1'-6"	1'-1"
D-6	1'-0"	6"	2'-2"	1'-8"

DRIVEWAYS

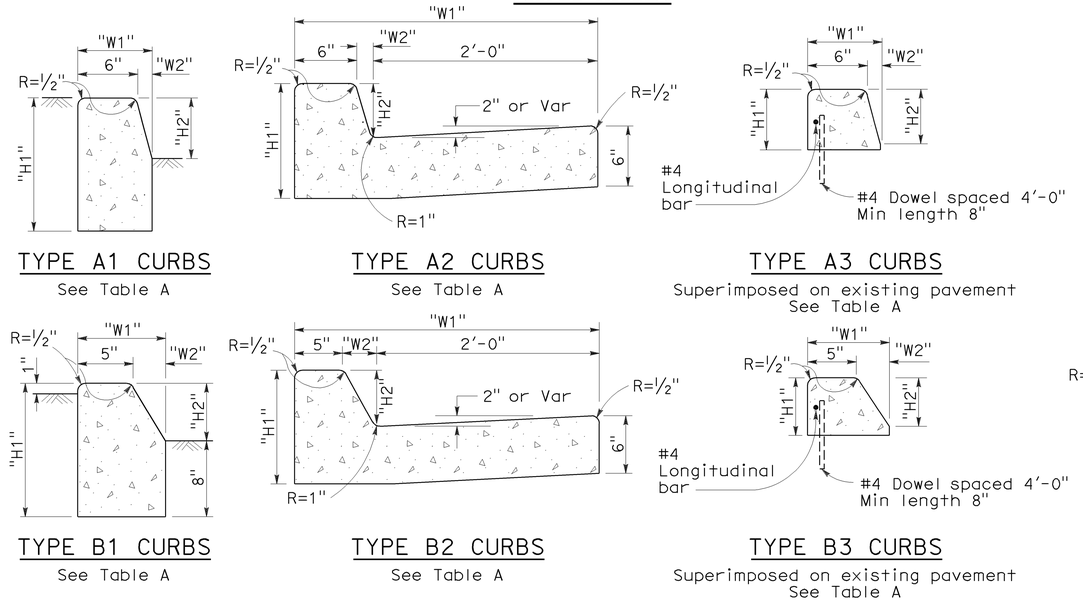

TYPE A1 CURBS
See Table A

TYPE A2 CURBS
See Table A

TYPE A3 CURBS
Superimposed on existing pavement
See Table A

TYPE B1 CURBS
See Table A

TYPE B2 CURBS
See Table A

TYPE B3 CURBS
Superimposed on existing pavement
See Table A

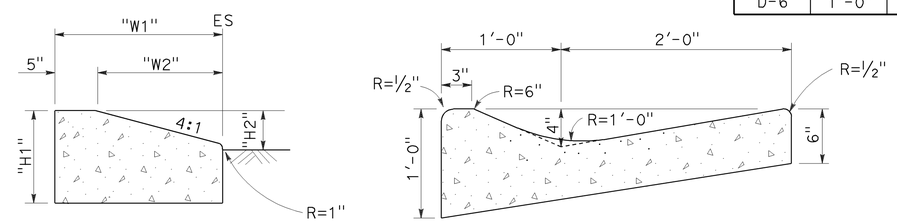

TYPE D CURBS
See Table A

TYPE E CURB

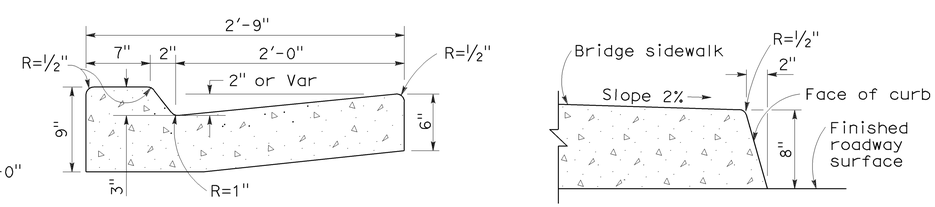

TYPE B4 CURBS

TYPE H CURB
On Bridges

CURBS

NOTES:

1. Case A driveway section typically applies.
2. Use Case B driveway section when ramp slopes would exceed 10% in Case A.
3. Use Case B driveway section when sidewalk cross slope would exceed 2% in Case A.
4. X=3'-0" except for curb heights over 10" where 4:1 slopes shall be used on curb slope.
5. X is a variable when sidewalk is located where wheelchairs may traverse the surface. Slopes shall not exceed 8.33%.
6. Sidewalk and ramp thickness "T" at driveway shall be 4" for residental and 6" for commercial.
7. Difference in slope of the driveway ramp and the slope of a line between the gutter and a point on the roadway 5'-0" from gutter line shall not exceed 15%. Reduce driveway ramp slope, not gutter slope, where required.
8. Minimum width of clear passageway for sidewalk shall be 4'-0".
9. Retaining curbs and acquisition of construction easement may be necessary for narrow sidewalks or curb heights in excess of 6".
10. Across the pedestrian route at curb ramp locations, the gutter pan slope shall not exceed 1" of depth for each 2'-0" of width.

STATE OF CALIFORNIA
DEPARTMENT OF TRANSPORTATION

CURBS AND DRIVEWAYS

NO SCALE

RSP A87A DATED NOVEMBER 17, 2006 SUPERSEDES STANDARD PLAN A87A DATED MAY 1, 2006 - PAGE 113 OF THE STANDARD PLANS BOOK DATED MAY 2006.

REVISED STANDARD PLAN RSP A87A

2006 REVISED STANDARD PLAN RSP A87A

10-25-06

DIST	COUNTY	ROUTE	POST MILES TOTAL PROJECT	SHEET NO.	TOTAL SHEETS
07	LA	5,10,14, 47,60,etc	Var	56	72

Raymond Don Tsztoo
REGISTERED CIVIL ENGINEER

June 6, 2008
PLANS APPROVAL DATE

REGISTERED PROFESSIONAL ENGINEER
Raymond Don Tsztoo
No. C37332
Exp. 6-30-08
CIVIL
STATE OF CALIFORNIA

The State of California or its officers or agents shall not be responsible for the accuracy or completeness of electronic copies of this plan sheet.

To accompany plans dated 10-22-12

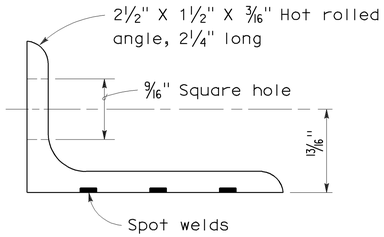

ANGLE

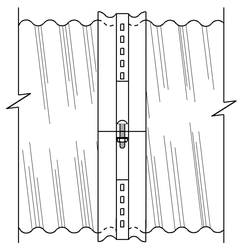

SIDE VIEW
ANGLE

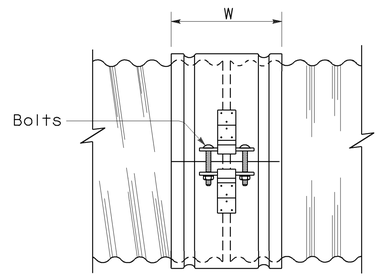

SIDE VIEW
SINGLE BAR AND STRAP

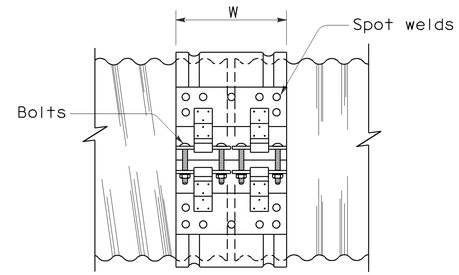

SIDE VIEW
DOUBLE BAR AND STRAP

NOTES:

1. All ferrous metal coupling band connection hardware shall be galvanized or electroplated in accordance with the Standard Specifications.
2. Dimensions and thicknesses shown are minimum.
3. Spot welds shall develop minimum required strength of strap.
4. Fillet welds of equivalent strength may be substituted for spot welds or rivets.
5. Dimension depends upon whether end condition is lips up or lips down.

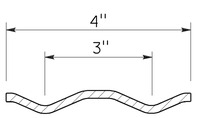

SECTION

H-4 HUGGER BAND

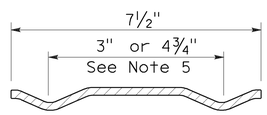

SECTION

H-7 HUGGER BAND

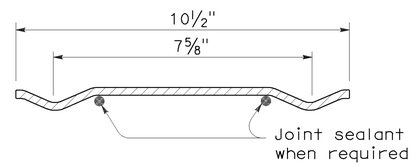

SECTION

H-10 HUGGER BAND

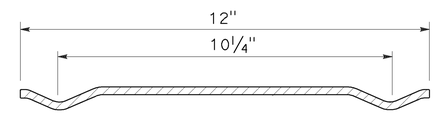

SECTION

H-12 HUGGER BAND

HUGGER COUPLING BANDS

STATE OF CALIFORNIA
DEPARTMENT OF TRANSPORTATION

CORRUGATED METAL PIPE COUPLING DETAILS No. 4 HUGGER COUPLING BANDS

NO SCALE

RSP D97D DATED JUNE 6, 2008 SUPERSEDES STANDARD PLAN D97D
DATED MAY 1, 2006 - PAGE 186 OF THE STANDARD PLANS BOOK DATED MAY 2006.

REVISED STANDARD PLAN RSP D97D

2006 REVISED STANDARD PLAN RSP D97D

3-24-08

DIST	COUNTY	ROUTE	POST MILES TOTAL PROJECT	SHEET NO.	TOTAL SHEETS
07	LA	5,10,14, 47,60,etc	Var	57	72

Raymond Don Tsztoo
REGISTERED CIVIL ENGINEER

June 6, 2008
PLANS APPROVAL DATE

REGISTERED PROFESSIONAL ENGINEER Raymond Don Tsztoo No. C37332 Exp. 6-30-08 CIVIL STATE OF CALIFORNIA

The State of California or its officers or agents shall not be responsible for the accuracy or completeness of electronic copies of this plan sheet.

2006 REVISED STANDARD PLAN RSP D97E

ANNULAR AND HELICAL PROFILE

COUPLING TYPE	PIPE CORRUGATION	PIPE SIZE	W OR A	PIPE WALL THICKNESS CSP	PIPE WALL THICKNESS CAP	BAND THICKNESS CSP	BAND THICKNESS CAP	BAR AND STRAP (CSP ONLY) STRAP THICKNESS	BOLTS Dia	BAR Dia	BAR YIELD STRENGTH	ANGLE DIMENSIONS CSP	ANGLE DIMENSIONS CAP	BOLTS (No.- Dia) CSP	BOLTS (No.- Dia) CAP	RIVETS ANGLE TO BAND CSP	RIVETS ANGLE TO BAND CAP	SPOT WELDS ANGLE TO BAND CSP
TWO PIECE INTEGRAL FLANGE	1½′ × ¼"	6"-10"	7"	0.052"-0.079"	0.048"-0.060"	0.052"	0.060"							2-⅜"	2-⅜"			
		12"-18"	7"	0.052"-0.079"		0.064"								2-½"				
	2⅔" × ½"	12"-24"	7"	0.052"-0.079"	0.060"-0.105"	0.064"	0.060"							2-½"	2-½"			
UNIVERSAL	2⅔" × ½"	THROUGH 36"	12"	0.052"-0.138"	0.060"-0.135"	0.052"	0.060"					2" × 2" × 3/16"	2" × 2" × 3/16"	3-½"	3-½"	3-⅜"	3-⅜"	3-½"
		42"-60"	12"	0.052"-0.168"	0.075"-0.164"	0.052"	0.060"					2" × 2" × 3/16"	2" × 2" × 3/16"	3-½"	3-½"	3-⅜"	3-⅜"	5-½"
		THROUGH 72"	12"	0.052"-0.168"	0.164"	0.052"	0.105"	0.079"	½"	⅞"	32 ksi	2" × 2" × 3/16"	2" × 2" × 3/16"	3-½"	3-½"	3-⅜"	3-⅜"	5-½"
		78"-84"	16¼"	0.168"		0.079"		DOUBLE 0.079"	½"	⅞"	32 ksi							
ANNULAR	2⅔" × ½"	THROUGH 36"	7"	0.064"-0.138"	0.060"-0.135"	0.052"	0.060"	0.079"	½"	⅞"	32 ksi	2" × 2" × 3/16"	2" × 2" × 3/16"	2-½"	2-½"	3-⅜"	3-⅜"	3-½"
		42"-72"	12"	0.064"-0.168"	0.075"-0.164"	0.052"	0.105"	0.079"	½"	⅞"	32 ksi	2" × 2" × 3/16"	2" × 2" × 3/16"	3-½"	3-½"	3-⅜"	3-⅜"	5-½"
		78"-84"	12"	0.168"		0.079"		0.109"	½"	⅞"	45 ksi	2" × 2" × 3/16"		3-½"		3-⅜"		5-½"
	3" × 1"	48"-90"	14"	0.064"-0.109"		0.052"		0.079"	½"	⅞"	32 ksi	2" × 2" × 3/16"		3-½"		3-⅜"		5-½"
		96"-120"	14"	0.079"-0.109"		0.052"		0.109"	½"	⅞"	45 ksi	2" × 2" × 3/16"		3-½"		4-⅜"		
		42"-108"	14"		0.060"-0.135"		0.060"						2" × 2" × 3/16"		3-½"		3-⅜"	
HELICAL	2⅔" × ½"	THROUGH 36"	12"	0.052"-0.138"	0.060"-0.135"	0.052"	0.060"	0.079"	½"	⅞"	32 ksi	2" × 2" × 3/16"	2" × 2" × 3/16"	3-½"	3-½"	3-⅜"	3-⅜"	3-½"
		42"-72"	12"	0.052"-0.168"	0.075"-0.164"	0.052"	0.060"	0.079"	½"	⅞"	32 ksi	2" × 2" × 3/16"	2" × 2" × 3/16"	3-½"	3-½"	3-⅜"	3-⅜"	5-½"
		78"-84"	12"	0.168"		0.079"		0.109"	½"	⅞"	45 ksi	2" × 2" × 3/16"		3-½"		3-⅜"		5-½"
	3" × 1"	48"-90"	14"	0.064"-0.109"		0.052"		0.079"	½"	⅞"	32 ksi	2" × 2" × 3/16"		3-½"		3-⅜"		5-½"
		96"-120"	14"	0.079"-0.109"		0.052"		0.109"	½"	⅞"	45 ksi	2" × 2" × 3/16"		3-½"		4-⅜"		
		42"-108"	14"		0.060"-0.135"		0.060"						2" × 2" × 3/16"		3-½"		3-⅜"	
HUGGER	2⅔" × ½" REROLLED END	12"-54"	4"	0.052"-0.109"		0.052"						2½" × 1½" × 3/16"	2½" × 1½" × 3/16"	1-½"				3-½"
		60"-66"	4"	0.109"		0.064"						2½" × 1½" × 3/16"	2½" × 1½" × 3/16"	1-½"				3-½"
		36"-48"	4"	0.138"		0.064"						2½" × 1½" × 3/16"	2½" × 1½" × 3/16"	1-½"				3-½"
		THROUGH 72"	10½"	0.052"-0.168"		0.052"		0.079"	½"	⅞"	32 ksi							
		78"-84"	10½"	0.168"		0.079"		0.109"	½"	⅞"	45 ksi							
	3" × 1" REROLLED END	48"-90"	10½"	0.064"-0.109"		0.052"		0.079"	½"	⅞"	32 ksi							
		96"-120"	10½"	0.079"-0.109"		0.052"		0.109"	½"	⅞"	45 ksi							
	5" × 1" REROLLED END	48"-66"	7½"	0.064"-0.109"		0.064"		0.079"	½"	⅞"	32 ksi	2½" × 1½" × 3/16"	2½" × 1½" × 3/16"	1-½"				3-½"
		72"-90"	7½"	0.064"-0.079"		0.064"		0.079"	½"	⅞"	32 ksi	2½" × 1½" × 3/16"	2½" × 1½" × 3/16"	1-½"				3-½"
		48"-90"	7½"	0.064"-0.138"		0.064"		0.079"	½"	⅞"	32 ksi							
		48"-120"	12" SEE	0.064"-0.109"		0.064"		0.079"	½"	⅞"	32 ksi							
		48"-84"	12" NOTE	0.138"		0.064"		0.079"	½"	⅞"	32 ksi							
		90"-120"	12" 11	0.138"		0.064"		DOUBLE 0.079"	½"	⅞"	32 ksi							

SPIRAL RIB PROFILE

COUPLING TYPE	PIPE CORRUGATION	PIPE SIZE	W	PIPE WALL THICKNESS SSRP	PIPE WALL THICKNESS ASRP	BAND THICKNESS SSRP	BAND THICKNESS ASRP	BAR AND STRAP (SSRP ONLY) STRAP THICKNESS	BOLTS Dia	BAR Dia	BAR YIELD STRENGTH	ANGLE DIMENSIONS SSRP	ANGLE DIMENSIONS ASRP	BOLTS (No.- Dia) SSRP	BOLTS (No.- Dia) ASRP	RIVETS ANGLE TO BAND SSRP	RIVETS ANGLE TO BAND ASRP	SPOT WELDS ANGLE TO BAND SSRP
ANNULAR	2⅔" × ½" * REROLLED END	24"-36"	12"	0.064"-0.109"	0.060"-0.105"	0.052"	0.060"	0.079"	½"	⅞"	32 ksi	2" × 2" × 3/16"	2" × 2" × 3/16"	3-½"	3-½"	3-⅜"	3-⅜"	5-½"
		42"-60"	12"	0.064"-0.109"	0.075"-0.105"	0.052"	0.105"	0.079"	½"	⅞"	32 ksi	2" × 2" × 3/16"	2" × 2" × 3/16"	3-½"	3-½"	3-⅜"	3-⅜"	5-½"
		66"-72"	12"	0.064"-0.109"		0.052"		0.079"	½"	⅞"	32 ksi	2" × 2" × 3/16"	2" × 2" × 3/16"	3-½"	3-½"	3-⅜"	3-⅜"	5-½"
		78"-114"	12"	0.079"-0.109"		0.079"		0.109"	½"	⅞"	45 ksi	2" × 2" × 3/16"	2" × 2" × 3/16"	3-½"	3-½"	3-⅜"	3-⅜"	5-½"
HUGGER	2⅔" × ½" * REROLLED END	24"-72"	10½"	0.064"-0.109"		0.052"		0.079"	½"	⅞"	32 ksi							
		78"-84"	10½"	0.109"		0.079"		0.109"	½"	⅞"	45 ksi							

* See Note 14.

14. All profiles of Spiral Rib Pipe (¾" × ¾" ribs at 7½" pitch and ¾" × 1" ribs at 11½" pitch in both steel and aluminum and ¾" × 1" ribs at 8½" pitch in steel only) shall be manufactured with rerolled ends. Corrugation profile of the rerolled ends shall be 2⅔" × ½" annual corrugations with a minimum of two full corrugations at each end.

NOTES:

To accompany plans dated 10-22-12

1. All ferrous metal coupling band connection hardware shall be galvanized or electro-plated in accordance with the Standard Specifications.
2. For helically corrugated coupling bands, the connection angles may be oriented parallel to the pipe axis, provided connecting holes are slotted lengthwise sufficiently to allow adjustment for the helix angle.
3. Tension strap may be connected to band with either spot welds or fillet welds that develop minimum required strength of strap.
4. Use 1¼" gage line dimension on attached angle leg for rivets and spot welds.
5. Band thickness shall not be less than:
   a. 3 standard thicknesses lighter than the thickness of the pipe for Corrugated Steel Pipe.
   b. 2 standard thicknesses lighter than the thickness of the pipe and in no case lighter than 0.060" for Corrugated Aluminum Pipe.
6. Dimensions, thicknesses and strengths shown are minimum.
7. For pipe arches use same width band as for round pipe of equal periphery.
8. Fillet welds of equivalent strenght may be substituted for spot welds or rivets.
9. Spot welds shall develop minimum required strength of strap.
10. Pipe with rerolled ends having at least two 2⅔" × ½" annular corrugations at each end with or without an upturned flange may be connected with any of the annular coupling bands shown for pipe of the same diameter and wall thickness and having 2⅔" × ½" corrugations.
11. In the case of H-12 huggerbands, two piece bands are required for diameters through 96" and three piece bands are required for diameters 102" through 120".
12. Two piece bands are required for pipes greater than 42" diameter.
13. The 2¼" × 2" × 0.109" thick galvanized die-formed angle connector may be used in lieu of the 2" × 2" × 3/16" angle connector for standard joints only on pipes through 72" diameter.

STATE OF CALIFORNIA
DEPARTMENT OF TRANSPORTATION

CORRUGATED METAL PIPE COUPLING DETAILS No. 5 STANDARD JOINT

NO SCALE

RSP D97E DATED JUNE 6, 2008 SUPERSEDES STANDARD PLAN D97E DATED MAY 1, 2006 - PAGE 187 OF THE STANDARD PLANS BOOK DATED MAY 2006.

REVISED STANDARD PLAN RSP D97E

4-2-08

DIST	COUNTY	ROUTE	POST MILES TOTAL PROJECT	SHEET NO.	TOTAL SHEETS
07	LA	5,10,14, 47,60,etc	Var	58	72

Raymond Don Tsztoo
REGISTERED CIVIL ENGINEER

June 6, 2008
PLANS APPROVAL DATE

REGISTERED PROFESSIONAL ENGINEER Raymond Don Tsztoo No. C37332 Exp. 6-30-08 CIVIL STATE OF CALIFORNIA

The State of California or its officers or agents shall not be responsible for the accuracy or completeness of electronic copies of this plan sheet.

To accompany plans dated 10-22-12

ANNULAR AND HELICAL PROFILE

COUPLING TYPE	PIPE CORRUGATION	PIPE SIZE	W OR A	PIPE WALL THICKNESS CSP	PIPE WALL THICKNESS CAP	BAND THICKNESS CSP	BAND THICKNESS CAP	BAR AND STRAP (CSP ONLY) STRAP THICKNESS	BOLTS Dia	BAR Dia	BAR YIELD STRENGTH	ANGLE DIMENSIONS CSP	ANGLE DIMENSIONS CAP	BOLTS (No. - Dia) CSP	BOLTS (No. - Dia) CAP	RIVETS ANGLE TO BAND CSP	RIVETS ANGLE TO BAND CAP	SPOT WELDS ANGLE TO BAND CSP
TWO PIECE INTEGRAL FLANGE	1½" × ¼"	6"-10"	7"	0.064"-0.079"	0.060"	0.064"	0.060"							2-⅜"	2-⅜"			
	2⅔" × ½"	12"-24"	12"		0.060"-0.105"		0.060"								3-½"			
UNIVERSAL	2⅔" × ½"	THROUGH 36"	12"	0.064"-0.138"	0.060"-0.135"	0.064"	0.060"	0.079"	½"	⅞"	32 ksi	2" × 2" × 3/16"	2" × 2" × 3/16"	3-½"	3-½"	3-⅜"	3-⅜"	5-½"
		42"-60"	16¼"	0.064"-0.168"	0.060"-0.164"	0.064"	0.060"	DOUBLE 0.079"	½"	⅞"	32 ksi	2" × 2" × ¼"	2" × 2" × ¼"	4-½"	4-½"	5-⅜"	5-⅜"	
ANNULAR	2⅔" × ½"	THROUGH 36"	12"	0.064"-0.138"	0.060"-0.135"	0.064"	0.060"					2" × 2" × 3/16"	2" × 2" × 3/16"	3-½"	3-½"	3-⅜"	3-⅜"	5-½"
		42"-60"	12"	0.064"-0.079"		0.064"						2" × 2" × 3/16"		3-½"		3-⅜"		5-½"
		42"-60"	12"	0.109"-0.168"	0.135"-0.164"	0.064"	0.075"					2" × 2" × ¼"	2" × 2" × ¼"	3-½"	3-½"	5-⅜"	5-⅜"	
		66"-72"	24"		0.164"		0.105"						2" × 2" × ¼"		5-½"		5-½"	
		66"-84"	24"	0.109"-0.168"		0.064"						2" × 2" × ¼"		5-½"		7-⅜"		
		42"-54"	12"		0.060"-0.105"		0.060"						2" × 2" × 3/16"		3-½"		3-⅜"	
	3" × 1"	48"-60"	14"	0.064"-0.079"		0.064"						2" × 2" × 3/16"		3-½"		3-⅜"		5-½"
		48"-60"	14"	0.109"		0.064"						2" × 2" × 3/16"		3-½"		5-⅜"		
		66"-120"	25"	0.064"-0.109"		0.064"						2" × 2" × 3/16"		5-½"		9-⅜"		
		42"-60"	14"		0.060"-0.105"		0.060"						2" × 2" × 3/16"		3-½"		5-⅜"	
		42"-60"	14"		0.135"		0.075"						2" × 2" × ¼"		3-½"		5-⅜"	
		66"-96"	25"		0.060"-0.135"		0.060"						2" × 2" × ¼"		5-½"		7-⅜"	
		96"-108"	25"		0.135"		0.075"						2" × 2" × ¼"		5-½"		7-⅜"	
HELICAL	2⅔" × ½"	THROUGH 36"	12"	0.064"-0.138"	0.060"-0.135"	0.064"	0.060"					2" × 2" × 3/16"	2" × 2" × 3/16"	3-½"	3-½"	3-⅜"	3-⅜"	5-½"
		42"-54"	12"		0.060"-0.105"		0.060"						2" × 2" × 3/16"		3-½"		3-⅜"	
		42"-60"	12"	0.064"-0.079"		0.064"						2" × 2" × 3/16"		3-½"		3-⅜"		5-½"
		42"-60"	12"	0.109"-0.168"	0.135"-0.164"	0.064"	0.075"					2" × 2" × ¼"	2" × 2" × ¼"	3-½"	3-½"	5-⅜"	5-⅜"	
		66'-84"	24"	0.109"-0.168"		0.064"						2" × 2" × ¼"		5-½"		7-⅜"		
		66"-72"	24"		0.164"		0.105"						2" × 2" × ¼"		5-½"		5-⅜"	
	3" × 1"	48"-60"	14"	0.064"-0.079"		0.064"						2" × 2" × 3/16"		3-½"		3-⅜"		5-½"
		48"-60"	14"	0.109"		0.064"						2" × 2" × 3/16"		3-½"		5-⅜"		
		66"-120"	25"	0.064"-0.109"		0.064"						2" × 2" × 3/16"		5-½"		9-⅜"		
		42"-60"	14"		0.060"-0.105"		0.060"						2" × 2" × 3/16"		3-½"		5-⅜"	
		42"-60"	14"		0.135"		0.075"						2" × 2" × ¼"		3-½"		5-⅜"	
		66"-96"	25"		0.060"-0.135"		0.060"						2" × 2" × ¼"		5-½"		7-⅜"	
		96"-108"	25"		0.135"		0.075"						2" × 2" × ¼"		5-½"		7-⅜"	
HUGGER	2⅔" × ½" REROLLED END	THROUGH 48"	10½"	0.109"		0.064"		0.079"	½"	⅞"	32 ksi							
		54"- 66"	10½"	0.109"		0.064"		DOUBLE 0.079"	½"	⅞"	32 ksi							
		THROUGH 54"	10½"	0.064"-0.079"		0.064"		0.079"	½"	⅞"	32 ksi							
		THROUGH 60"	10½"	0.138"		0.079"		DOUBLE 0.079"	½"	⅞"	32 ksi							
		66"-72"	10½"	0.138"		0.109"		DOUBLE 0.079"	½"	⅞"	32 ksi							
		THROUGH 72"	10½"	0.168"		0.109"		DOUBLE 0.109"	½"	⅞"	45 ksi							
	3" × 1" REROLLED END	48"-84"	10½"	0.109"		0.079"		DOUBLE 0.079"	½"	⅞"	32 ksi							
		48"-90"	10½"	0.064"-0.079"		0.064"		DOUBLE 0.079"	½"	⅞"	32 ksi							
		96"-102"	10½"	0.079"		0.079"		DOUBLE 0.079"	½"	⅞"	32 ksi							
		90"-120"	10½"	0.109"		0.109"		DOUBLE 0.109"	½"	⅞"	45 ksi							

SPIRAL RIB PROFILE

COUPLING TYPE	PIPE CORRUGATION	PIPE SIZE	W	PIPE WALL THICKNESS SSRP	PIPE WALL THICKNESS ASRP	BAND THICKNESS SSRP	BAND THICKNESS ASRP	BAR AND STRAP (SSRP ONLY) STRAP THICKNESS	BOLTS Dia	BAR Dia	BAR YIELD STRENGTH	ANGLE DIMENSIONS SSRP	ANGLE DIMENSIONS ASRP	BOLTS (No.- Dia) SSRP	BOLTS (No.- Dia) ASRP	RIVETS ANGLE TO BAND SSRP	RIVETS ANGLE TO BAND ASRP	SPOT WELDS ANGLE TO BAND SSRP
ANNULAR	2⅔" × ½" * REROLLED END	24"-36"	12"	0.064"-0.109"	0.060"-0.105"	0.064"	0.060"	0.079"	½"	⅞"	32 ksi	2" × 2" × 3/16"	2" × 2" × 3/16"	3-½"	3-½"	3-⅜"	3-⅜"	5-½"
		42"-60"	12"	0.064"-0.079"	0.075"-0.105"	0.064"	0.075"	0.079"	½"	⅞"	32 ksi	2" × 2" × 3/16"	2" × 2" × 3/16"	3-½"	3-½"	3-⅜"	3-⅜"	5-½"
		42"-60"	12"	0.109"		0.064"		0.079"	½"	⅞"	32 ksi	2" × 2" × ¼"		3-½"		5-⅜"		
		66"-84"	24"	0.109"		0.064"		0.079"	½"	⅞"	32 ksi	2" × 2" × ¼"		5-½"		7-⅜"		
HUGGER	2⅔" × ½" * REROLLED END	24"-54"	10½"	0.064"-0.079"		0.064"		0.079"	½"	⅞"	32 ksi							
		24"-48"	10½"	0.109"		0.064"		0.079"	½"	⅞"	32 ksi							
		54"-66"	10½"	0.109"		0.064"		Double 0.079"	½"	⅞"	32 ksi							

* See Note 13.

NOTES:

1. All ferrous metal coupling band connection hardware shall be galvanized or electro-plated in accordance with the Standard Specifications.
2. For helically corrugated coupling bands, the connection angles may be oriented parallel to the pipe axis, provided connecting holes are slotted lengthwise sufficiently to allow adjustment for the helix angle.
3. Tension strap may be connected to band with either spot welds or fillet welds that develop minimum required strength of strap.
4. Use 1¼" gage line dimension on attached angle leg for rivets and spot welds.
5. Band thickness shall not be less than:
   a. 3 standard thicknesses lighter than the thickness of the pipe for Corrugated Steel Pipe.
   b. 2 standard thicknesses lighter than the thickness of the pipe and in no case lighter than 0.060" for Corrugated Aluminum Pipe.
6. Dimensions, thicknesses and strengths shown are minimum.
7. For pipe arches use same width band as for round pipe of equal periphery.
8. Fillet welds of equivalent strength may be substituted for spot welds or rivets.
9. Spot welds shall develop minimum required strength of strap.
10. Pipe with rerolled ends having at least two 2⅔" × ½" annular corrugations at each end with or without an upturned flange may be connected with any of the annular coupling bands shown for pipe of the same diameter and wall thickness and having 2⅔" × ½" corrugations.
11. In the case of H-12 huggerbands, two piece bands are required for diameters through 96" and three piece bands are required for diameters 102" through 120".
12. Two piece bands are required for pipes greater than 42" diameter.
13. All profiles of Spiral Rib Pipe (¾" × ¾" ribs at 7½" pitch and ¾" × 1" ribs at 11½" pitch in both steel and aluminum and ¾" × 1" ribs at 8½" pitch in steel only) shall be manufactured with rerolled ends. Corrugation profile of the rerolled ends shall be 2⅔" × ½" annual corrugations with a minimum of two full corrugations at each end.

STATE OF CALIFORNIA
DEPARTMENT OF TRANSPORTATION

CORRUGATED METAL PIPE COUPLING DETAILS No. 6 POSITIVE JOINT

NO SCALE

RSP D97F DATED JUNE 6, 2008 SUPERSEDES STANDARD PLAN D97F
DATED MAY 1, 2006 - PAGE 188 OF THE STANDARD PLANS BOOK DATED MAY 2006.

REVISED STANDARD PLAN RSP D97F

2006 REVISED STANDARD PLAN RSP D97F

4-2-08

DIST	COUNTY	ROUTE	POST MILES TOTAL PROJECT	SHEET NO.	TOTAL SHEETS
07	LA	5,10,14, 47,60,etc	Var	59	72

LICENSED LANDSCAPE ARCHITECT

June 5, 2009
PLANS APPROVAL DATE

LICENSED LANDSCAPE ARCHITECT
Gregory A. Balzer 2576
10-31-11
Renewal Date
2-28-11
Renewal Date
5-14-09
Date
STATE OF CALIFORNIA

The State of California or its officers or agents shall not be responsible for the accuracy or completeness of electronic copies of this plan sheet.

To accompany plans dated 10-22-12

A

AB	aggregate base
ABS	acrylonitrile-butadiene-styrene
AC	asphalt concrete
Adj	adjacent/adjustable
AIC	auxiliary irrigation controller
Alt	alternative
AMEND	amendment
ARV	air release valve
AUTO	automatic
AUX	auxiliary
AVB	atmospheric vacuum breaker

B

B&B	balled and burlapped
B/B	brass/bronze
B/B/PL	brass/bronze/plastic
B/PL	brass/plastic
BFM	bonded fiber matrix
Bit Ctd	bituminous coated
BP	booster pump
BPA	backflow preventer assembly
BPAE	backflow preventer assembly in enclosure
BPE	backflow preventer enclosure
BV	ball valve

C

CAP	corrugated aluminum pipe
CARV	combination air release valve
CCA	cam coupler assembly
CEC	controller enclosure cabinet
CHDPE	corrugated high density polyethylene
CL	chain link
CNC	control and neutral conductors
Conc	concrete
Cond	conduit
CSP	corrugated steel pipe
CST	center strip
CV	check valve

D

Dia	diameter
DIP	ductile iron pipe
DN	diameter nominal

E

EA	each
Elect	electric/electrical
Elev	elevation
ENCL	enclosure
EP	edge of pavement
ES	edge of shoulder
EST	end strip
ESTB	establishment
ETW	edge of traveled way

F

F	full circle
F/P	full/part circle
FAU	filter assembly unit
FCV	flow control valve
FERT	fertilizer
FG	finished grade
FIPT	female iron pipe thread
FIS	fertilizer injector system
FL	flow line
FM	flow monitor
FS	flow sensor
Ft	foot/feet
FV	flush valve

G

GAL	Gallon(s)
Galv	galvanized
GARV	garden valve
GPH	gallons per hour
GPM	gallons per minute
GSP	galvanized steel pipe
GV	gate valve

H

H	half circle
HB	hose bib
HDPE	high density polyethylene
HP	horsepower/hinge point
HPL	high pressure line
Hwy	highway

I

IC	irrigation controller
ICC	irrigation controller(s) in controller enclosure cabinet
ID	inside diameter
In	inches
IFS	irrigation filtration system
IPS	iron pipe size
IPT	iron pipe thread
Irr	irrigation

L

L	length
LF	linear foot

M

Max	maximum
MBGR	metal beam guard railing
MCV	manual control valve
MIC	master irrigation controller
Min	minimum
MIPT	male iron pipe thread
Misc	miscellaneous
Mtl	material
MVP	maintenance vehicle pullout

N

NCN	no common name
NL	nozzle line
No.	number
NPT	national pipe thread

O

O/C	on center
OD	outside diameter
Oz	ounce

P

P	part circle
PB	pull box
PCC	portland cement concrete
PE	polyethylene
Pkt	packet
PL	plastic
PLT	plant/planting
PLT ESTB	plant establishment
PM	post mile
PR	pressure rated
PRLV	pressure relief valve
PSFM	polymer stabilized fiber matrix
PSI	pounds per square inch
PRV	pressure reducing valve
PVC	polyvinyl chloride
Pvmt	pavement

Q

Q	quarter circle
QCV	quick coupling valve

R

R	radius
RCP	reinforced concrete pipe
RCV	remote control valve
RCVM	remote control valve (master)
RCVMF	remote control valve (master) w/ flow meter
RCW	recycled/reclaimed water
RECP	rolled erosion control product
REQ	required
R/W	right of way

S

S	slip
SCC	sprinkler control conduit
SCH	schedule
SF	state-furnished
Shld	shoulder
SQFT	square foot/feet
SQYD	square yard(s)
SST	side strip
Sta	station
Std	standard
SW	sidewalk/sound wall

T

T	third circle/thread
TLS	truck loading standpipe
TQ	three quarter circle
TRM	turf reinforcement mat
TRVD	traveled
TT	two third circle
Typ	typical

U

UG	underground

V

VAU	valve assembly unit

W

W	width
W/	with
WM	water meter
WS	wye strainer
WSP	welded steel pipe
WWM	welded wire mesh

NOTE:

FOR ADDITIONAL ABBREVIATIONS, SEE STANDARD PLANS A10A AND A10B.

STATE OF CALIFORNIA
DEPARTMENT OF TRANSPORTATION

PLANTING AND IRRIGATION ABBREVIATIONS

NO SCALE

RSP H1 DATED JUNE 5, 2009 SUPERSEDES STANDARD PLAN H1
DATED MAY 1, 2006 - PAGE 201 OF THE STANDARD PLANS BOOK DATED MAY 2006.

REVISED STANDARD PLAN RSP H1

2006 REVISED STANDARD PLAN RSP H1

5-28-09

DIST	COUNTY	ROUTE	POST MILES TOTAL PROJECT	SHEET NO.	TOTAL SHEETS
07	LA	5,10,14, 47,60,etc	Var	60	72

Gregory A. Balzer
LICENSED LANDSCAPE ARCHITECT

June 5, 2009
PLANS APPROVAL DATE

LICENSED LANDSCAPE ARCHITECT
Gregory A. Balzer 2576
Registered Landscape Architect
Gregory A. Balzer
Signature
2-28-11
Renewal Date
5-14-09
Date
STATE OF CALIFORNIA

The State of California or its officers or agents shall not be responsible for the accuracy or completeness of electronic copies of this plan sheet.

To accompany plans dated 10-22-12

EXISTING	PROPOSED	ITEM DESCRIPTION
		WATER METER (WM)
		BACKFLOW PREVENTER ASSEMBLY (BPA)
		BACKFLOW PREVENTER ASSEMBLY IN ENCLOSURE (BPAE)
		BACKFLOW PREVENTER ENCLOSURE (BPE)
		BOOSTER PUMP (BP)
		TRUCK LOADING STANDPIPE (TLS)
FS	FS	FLOW SENSOR (FS)
		MASTER IRRIGATION CONTROLLER (MIC)
		AUXILIARY IRRIGATION CONTROLLER (AIC)
		IRRIGATION CONTROLLER (IC)/ IRRIGATION CONTROLLER (IC) (BATTERY) IRRIGATION CONTROLLER (IC) (SOLAR)
		IRRIGATION CONTROLLER(S) IN CONTROLLER ENCLOSURE CABINET (ICC)
		CONTROL AND NEUTRAL CONDUCTORS (CNC)
SCC	SCC	SPRINKLER CONTROL CONDUIT (SCC)
		IRRIGATION CROSSOVER
		EXTEND IRRIGATION CROSSOVER
		IRRIGATION SLEEVE
dip	DIP	DUCTILE IRON PIPE (SUPPLY LINE) (MAIN) (DIP)
		GALVANIZED STEEL PIPE (SUPPLY LINE) (MAIN) (GSP)
		GALVANIZED STEEL PIPE (SUPPLY LINE) (LATERAL) (GSP)
		PLASTIC PIPE (PR 200) (SUPPLY LINE) (MAIN)
		PLASTIC PIPE (PR 200) (SUPPLY LINE) (LATERAL)
		PLASTIC PIPE (IRRIGATION LINE)
		REMOTE CONTROL VALVE (RCV) REMOTE CONTROL VALVE (MASTER) (RCVM) REMOTE CONTROL VALVE (MASTER) W/FLOW METER (RCVMF)
		MANUAL CONTROL VALVE (MCV)
		VALVE ASSEMBLY UNIT (VAU)
		WYE STRAINER (WS)
		FILTER ASSEMBLY UNIT (FAU)
		GATE VALVE (GV)
		BALL VALVE (BV)

EXISTING	PROPOSED	ITEM DESCRIPTION
		QUICK COUPLING VALVE (QCV)
		CAM COUPLER ASSEMBLY (CCA)
		PRESSURE REDUCING VALVE (PRV)
		PRESSURE RELIEF VALVE (PRLV)
		FLOW CONTROL VALVE (FCV)
		COMBINATION AIR RELEASE VALVE (CARV)
		CHECK VALVE (CV)
		FLUSH VALVE (FV)
		NOZZLE LINE W/TURNING UNION
		IRRIGATION SYSTEM
		IRRIGATION SYSTEM TO BE REMOVED
		CHAIN LINK GATE
		QUICK COUPLING VALVE W/SPRINKLER PROTECTOR
3	3	SPRINKLER W/SPRINKLER PROTECTOR
	C	CONNECT TO EXISTING SYSTEM
		CAP
		CAP EXISTING

VALVE CODE

RCV SIZE
IRRIGATION CONTROLLER
CONTROLLER STATION
VALVE IN PARALLEL (IF APPLICABLE)
GPM
QUANTITY OF SPRINKLERS (WHEN SHOWN)

* 2½"-A-2b-40 -60

MCV SIZE
VALVE NUMBER
GPM
QUANTITY OF TYPE SPRINKLERS (WHEN SHOWN)

* 2"-3-30 -50

* VALVE CODES FOR EXISTING VALVES ARE SHOWN IN A DASHED ENCLOSURE.

STATE OF CALIFORNIA
DEPARTMENT OF TRANSPORTATION

PLANTING AND IRRIGATION SYMBOLS

NO SCALE

RSP H2 DATED JUNE 5, 2009 SUPERSEDES RSP H2 DATED MARCH 7, 2008 AND STANDARD PLAN H2 DATED MAY 1, 2006 - PAGE 202 OF THE STANDARD PLANS BOOK DATED MAY 2006.

REVISED STANDARD PLAN RSP H2

2006 REVISED STANDARD PLAN RSP H2

5-11-09

DIST	COUNTY	ROUTE	POST MILES TOTAL PROJECT	SHEET NO.	TOTAL SHEETS
07	LA	5,10,14, 47,60,etc	Var	61	72

Gregory A. Balzer
LICENSED LANDSCAPE ARCHITECT

June 5, 2009
PLANS APPROVAL DATE

LICENSED LANDSCAPE ARCHITECT
Gregory A. Balzer 2576
Signature
2-28-11
Renewal Date
5-14-09
Date
STATE OF CALIFORNIA

The State of California or its officers or agents shall not be responsible for the accuracy or completeness of electronic copies of this plan sheet.

To accompany plans dated 10-22-12

2006 REVISED STANDARD PLAN RSP H5

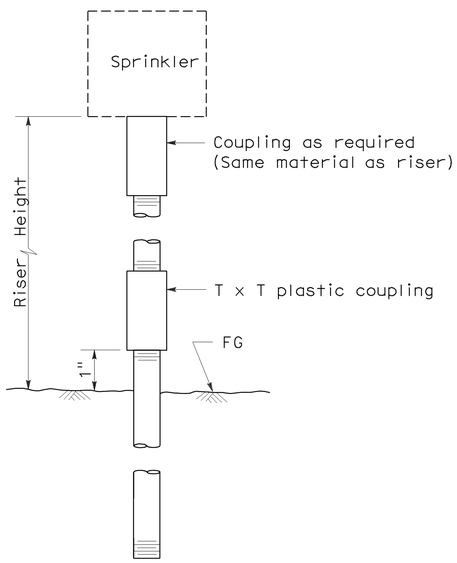

ELEVATION
RISER TYPE I

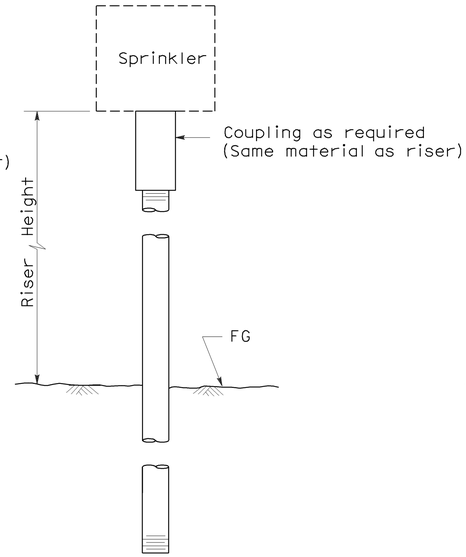

ELEVATION
RISER TYPE II

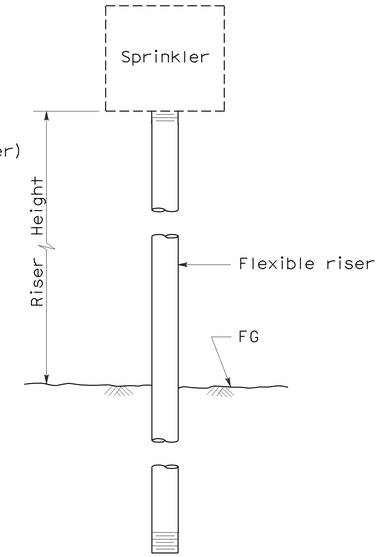

ELEVATION
RISER TYPE III

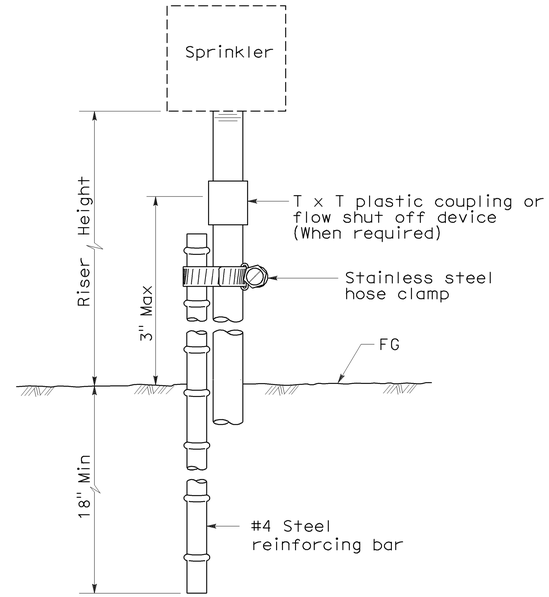

ELEVATION
RISER TYPE IV

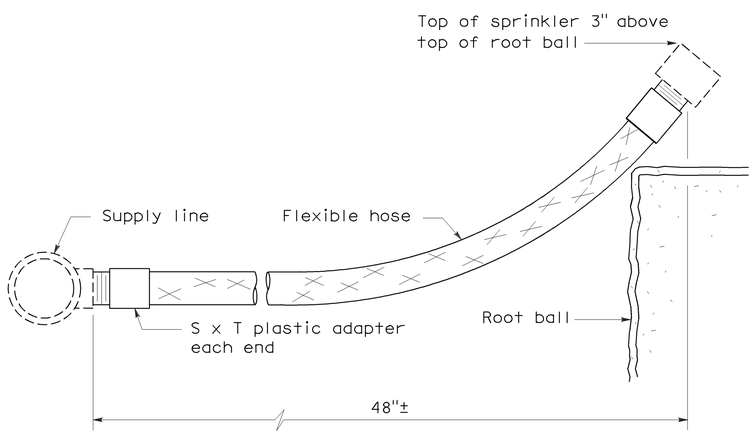

ELEVATION
RISER TYPE V

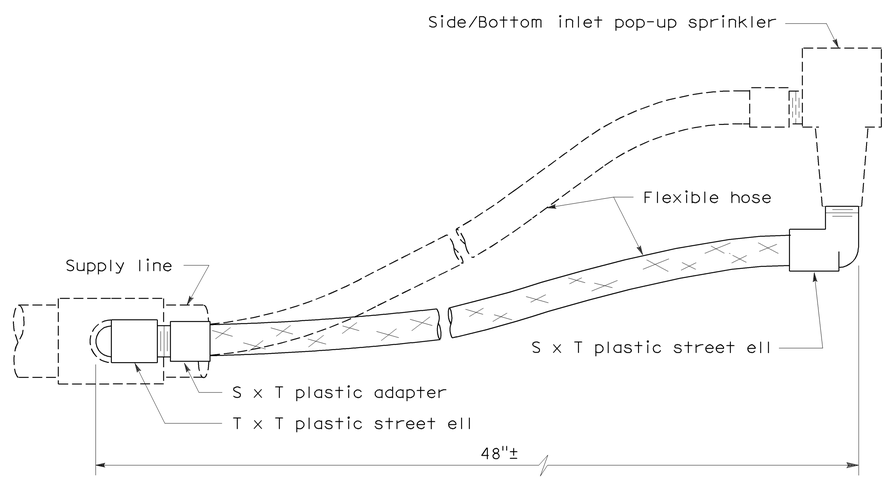

ELEVATION
RISER TYPE VI

STATE OF CALIFORNIA
DEPARTMENT OF TRANSPORTATION

PLANTING AND IRRIGATION DETAILS

NO SCALE

RSP H5 DATED JUNE 5, 2009 SUPERSEDES STANDARD PLAN H5
DATED MAY 1, 2006 - PAGE 205 OF THE STANDARD PLANS BOOK DATED MAY 2006.

REVISED STANDARD PLAN RSP H5

5-28-09

DIST	COUNTY	ROUTE	POST MILES TOTAL PROJECT	SHEET NO.	TOTAL SHEETS
07	LA	5,10,14, 47,60,etc	Var	62	72

Gregory A. Balzer
LICENSED LANDSCAPE ARCHITECT

June 5, 2009
PLANS APPROVAL DATE

The State of California or its officers or agents shall not be responsible for the accuracy or completeness of electronic copies of this plan sheet.

LICENSED LANDSCAPE ARCHITECT
Gregory A. Balzer 2576
Signature
2-28-11
Renewal Date
5-14-09
Date
STATE OF CALIFORNIA

To accompany plans dated 10-22-12

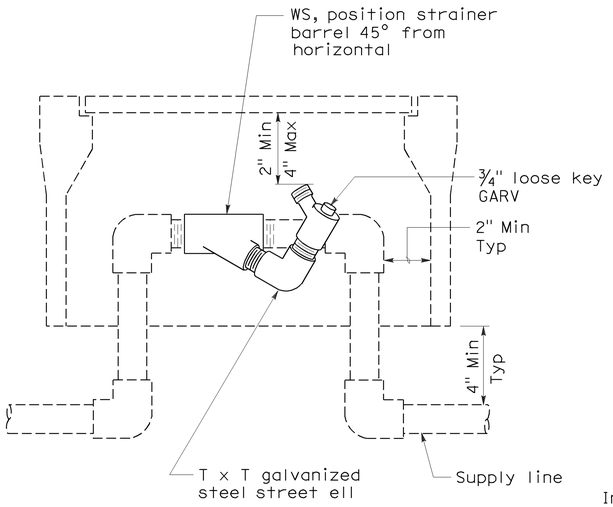

ELEVATION
WYE STRAINER

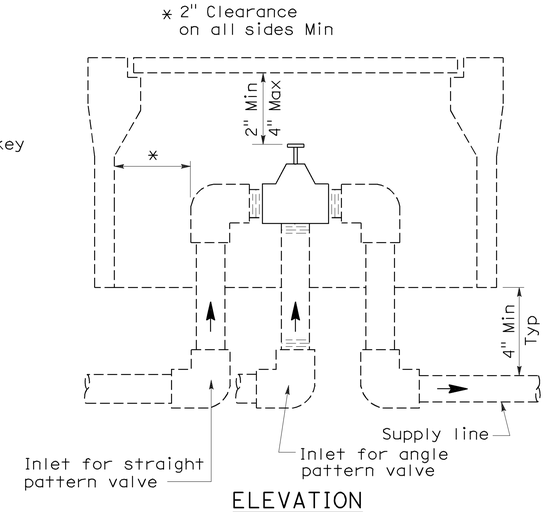

ELEVATION
VALVE

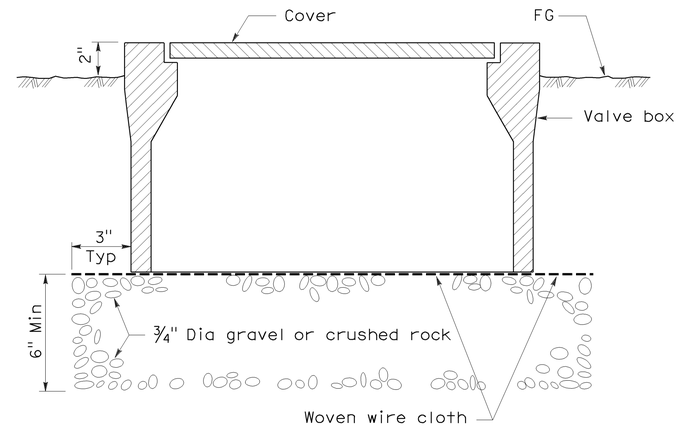

SECTION
VALVE BOX

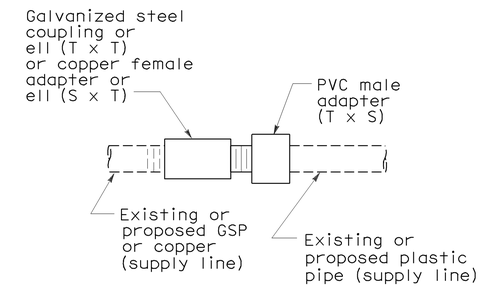

PLAN
GALVANIZED OR COPPER PIPE CONNECTION TO PLASTIC PIPE

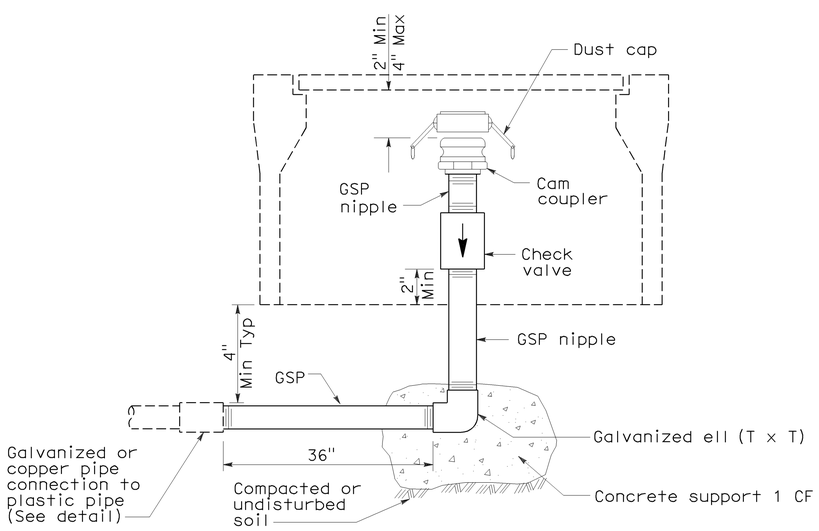

ELEVATION
CAM COUPLER ASSEMBLY

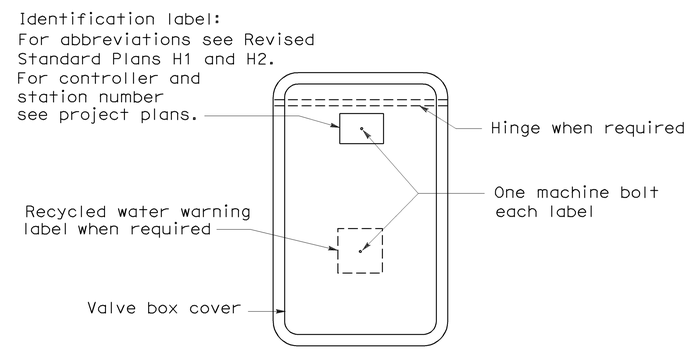

PLAN

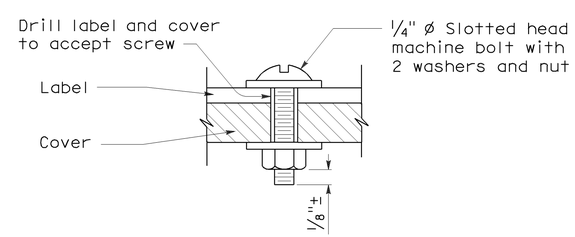

SECTION
VALVE BOX IDENTIFICATION

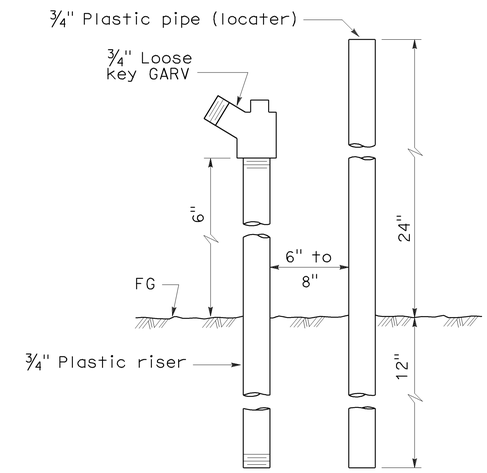

ELEVATION
FLUSH VALVE

STATE OF CALIFORNIA
DEPARTMENT OF TRANSPORTATION

PLANTING AND IRRIGATION DETAILS

NO SCALE

RSP H7 DATED JUNE 5, 2009 SUPERSEDES STANDARD PLAN H7
DATED MAY 1, 2006 - PAGE 207 OF THE STANDARD PLANS BOOK DATED MAY 2006.

REVISED STANDARD PLAN RSP H7

2006 REVISED STANDARD PLAN RSP H7

5-28-09

DIST	COUNTY	ROUTE	POST MILES TOTAL PROJECT	SHEET NO.	TOTAL SHEETS
07	LA	5,10,14, 47,60,etc	Var	63	72

Randell D. Hiatt
REGISTERED CIVIL ENGINEER

June 6, 2008
PLANS APPROVAL DATE

REGISTERED PROFESSIONAL ENGINEER
Randell D. Hiatt
No. C50200
Exp. 6-30-09
CIVIL
STATE OF CALIFORNIA

The State of California or its officers or agents shall not be responsible for the accuracy or completeness of electronic copies of this plan sheet.

To accompany plans dated 10-22-12

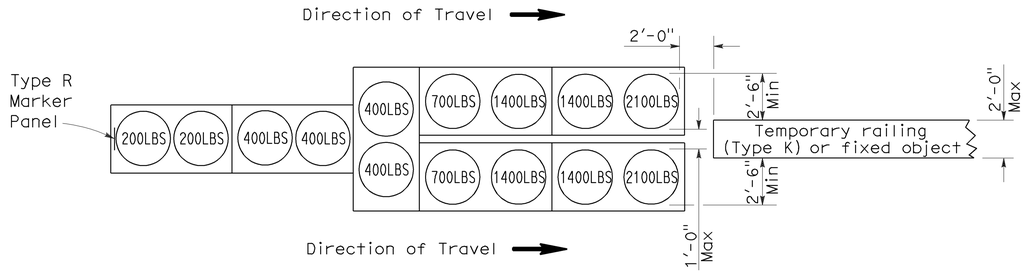

ARRAY 'TU14'

Approach speed 45 mph or more

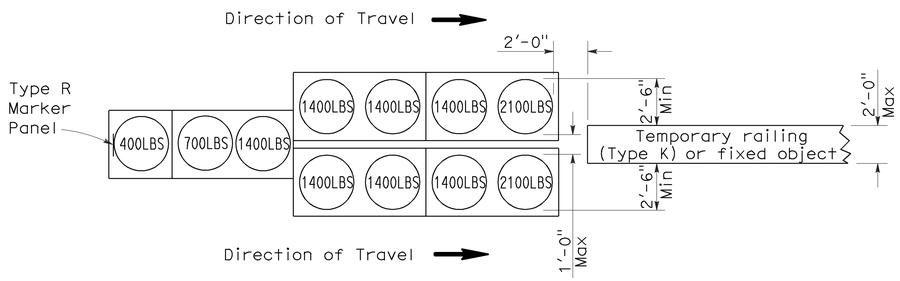

ARRAY 'TU11'

Approach speed less than 45 mph

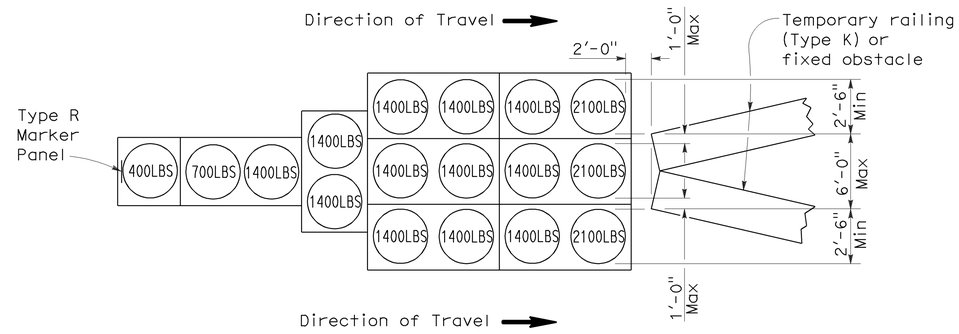

ARRAY 'TU17'

Approach speed less than 45 mph

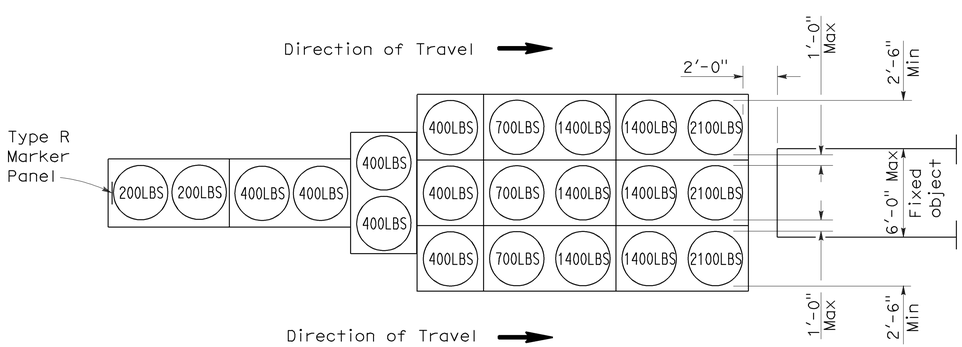

ARRAY 'TU21'

Approach speed 45 mph or more

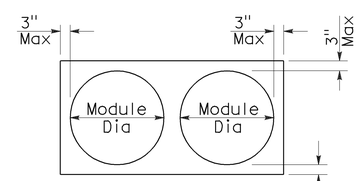

PLAN

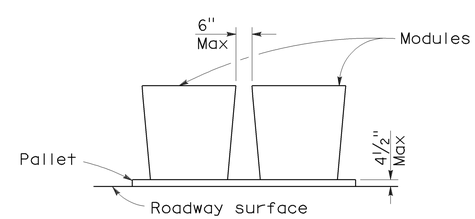

ELEVATION

CRASH CUSHION PALLET DETAIL

See Note 7

NOTES:

1. (XXX) Indicates sand filled module location and weight of sand in pounds for each module. Module spacing is based on the greater diameter of the module.
2. All sand weights are nominal.
3. Temporary crash cushion arrays shall not encroach on the traveled way.
4. Place the top of Type R marker panel 1" below the module lid.
5. Refer to Standard Plan A73B for marker details.
6. Approach speeds indicated conform to NCHRP 350 Report criteria.
7. Use of pallets is optional.

STATE OF CALIFORNIA
DEPARTMENT OF TRANSPORTATION

TEMPORARY CRASH CUSHION, SAND FILLED (UNIDIRECTIONAL)

NO SCALE

RSP T1A DATED JUNE 6, 2008 SUPERSEDES STANDARD PLAN T1A
DATED MAY 1, 2006 - PAGE 211 OF THE STANDARD PLANS BOOK DATED MAY 2006.

REVISED STANDARD PLAN RSP T1A

2006 REVISED STANDARD PLAN RSP T1A

5-15-08

DIST	COUNTY	ROUTE	POST MILES TOTAL PROJECT	SHEET NO.	TOTAL SHEETS
07	LA	5,10,14, 47,60,etc	Var	64	72

Randell D. Hiatt
REGISTERED CIVIL ENGINEER

June 6, 2008
PLANS APPROVAL DATE

REGISTERED PROFESSIONAL ENGINEER
Randell D. Hiatt
No. C50200
Exp. 6-30-09
CIVIL
STATE OF CALIFORNIA

The State of California or its officers or agents shall not be responsible for the accuracy or completeness of electronic copies of this plan sheet.

To accompany plans dated 10-22-12

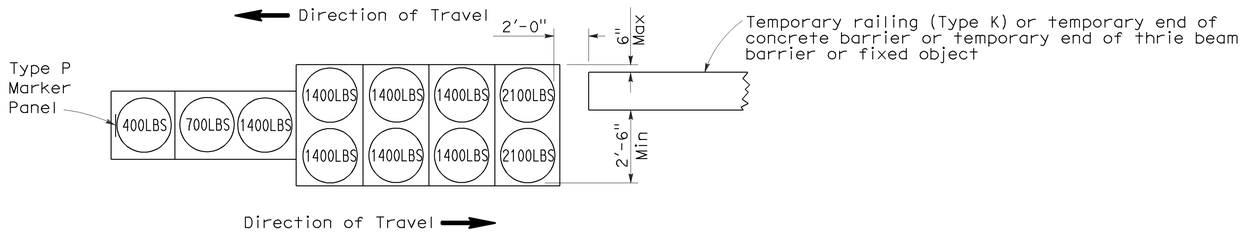

ARRAY 'TB11'

Approach speed less than 45 mph

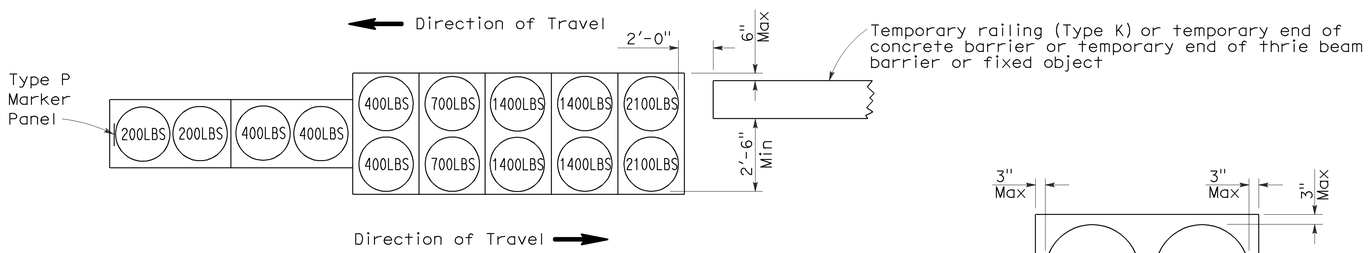

ARRAY 'TB14'

Approach speed 45 mph or more

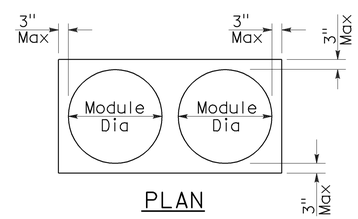

PLAN

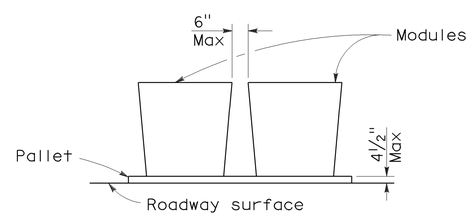

ELEVATION

CRASH CUSHION PALLET DETAIL

See Note 7

NOTES:

1. (XXX) Indicates sand filled module location and weight of sand in pounds for each module. Module spacing is based on the greater diameter of the module.
2. All sand weights are nominal.
3. Temporary crash cushion arrays shall not encroach on the traveled way.
4. Place the Type P marker panel so that the bottom of the panel rests upon the pallet.
5. Refer to Standard Plan A73B for marker details.
6. Approach speeds indicated conform to NCHRP 350 Report criteria.
7. Use of pallets is optional.

STATE OF CALIFORNIA
DEPARTMENT OF TRANSPORTATION

TEMPORARY CRASH CUSHION, SAND FILLED (BIDIRECTIONAL)

NO SCALE

RSP T1B DATED JUNE 6, 2008 SUPERSEDES STANDARD PLAN T1B
DATED MAY 1, 2006 - PAGE 212 OF THE STANDARD PLANS BOOK DATED MAY 2006.

REVISED STANDARD PLAN RSP T1B

2006 REVISED STANDARD PLAN RSP T1B

DIST	COUNTY	ROUTE	POST MILES TOTAL PROJECT	SHEET NO.	TOTAL SHEETS
07	LA	5,10,14, 47,60,etc	Var	65	72

Randell D. Hiatt
REGISTERED CIVIL ENGINEER

June 6, 2008
PLANS APPROVAL DATE

REGISTERED PROFESSIONAL ENGINEER
Randell D. Hiatt
No. C50200
Exp. 6-30-09
CIVIL
STATE OF CALIFORNIA

The State of California or its officers or agents shall not be responsible for the accuracy or completeness of electronic copies of this plan sheet.

To accompany plans dated 10-22-12

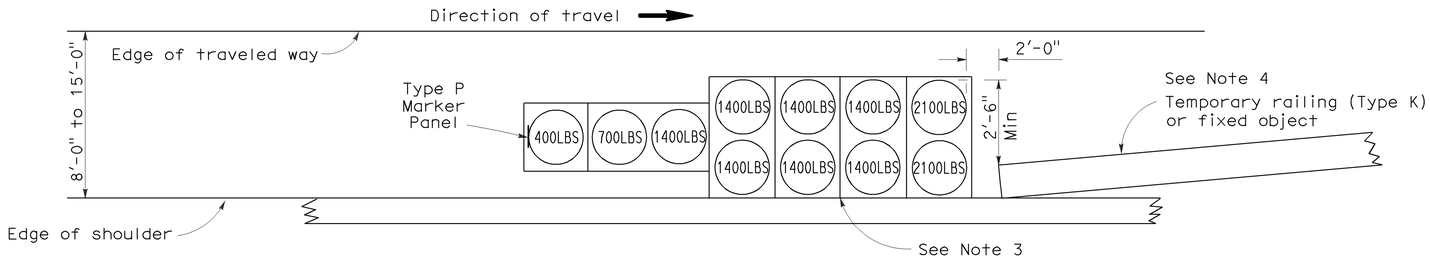

ARRAY 'TS11'

Approach speed less than 45 mph
See Note 9

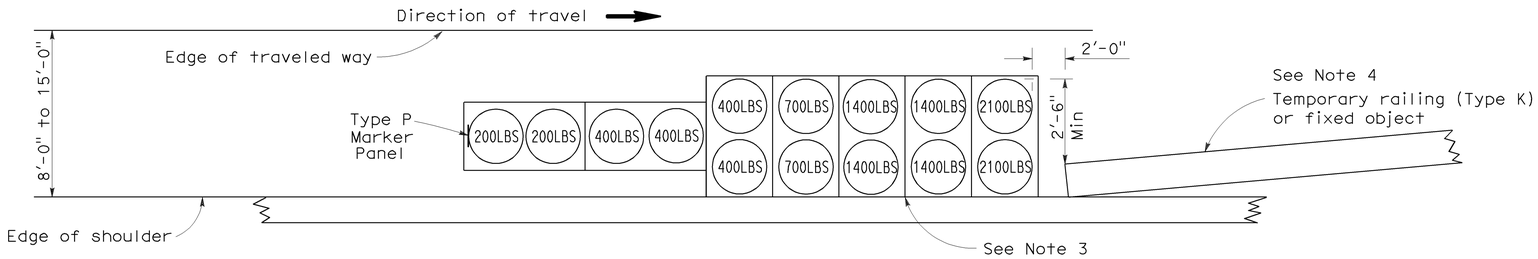

ARRAY 'TS14'

Approach speed 45 mph or more
See Note 9

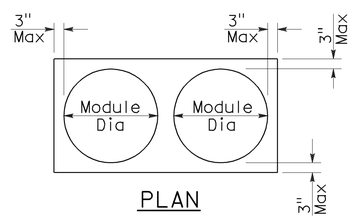

PLAN

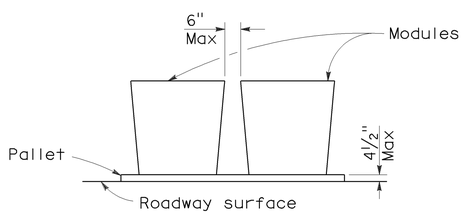

ELEVATION

CRASH CUSHION PALLET DETAIL

See Note 11

NOTES:

1. (XXX) Indicates sand filled module location and weight of sand in pounds for each module. Module spacing is based on the greater diameter of the module.
2. All sand weights are nominal.
3. The temporary crash cushion arrays shown on this plan shall be used only in locations where there will be traffic on one side of the temporary crash cushion array.
4. If the fixed object or approach end of the temporary railing is less than 15'-0" from the edge of traveled way, a temporary crash cushion is required in a construction or work zone.
5. Temporary crash cushion arrays shall not encroach on the traveled way.
6. Arrays for median shoulders shall conform to details shown on this plan for outside shoulders.
7. Place the Type P marker panel so that the bottom of the panel rests upon the pallet and faces traffic.
8. Refer to Standard Plan A73B for marker details.
9. For shoulder widths less than 8'-0", appropriate approved crash cushion protection, other than sand filled modules, shall be provided at fixed objects and at approach ends of temporary railing. The specific type of crash cushion shall be as shown on the project plans or as specified in the Special Provisions, or if not shown on the project plans or specified in the Special Provisions, shall be as approved by the Engineer.
10. Approach speeds indicated conform to NCHRP 350 Report criteria.
11. Use of pallets is optional.

STATE OF CALIFORNIA
DEPARTMENT OF TRANSPORTATION

TEMPORARY CRASH CUSHION, SAND FILLED (SHOULDER INSTALLATIONS)

NO SCALE

RSP T2 DATED JUNE 6, 2008 SUPERSEDES STANDARD PLAN T2
DATED MAY 1, 2006 - PAGE 213 OF THE STANDARD PLANS BOOK DATED MAY 2006.

REVISED STANDARD PLAN RSP T2

2006 REVISED STANDARD PLAN RSP T2

Dist	COUNTY	ROUTE	POST MILES TOTAL PROJECT	SHEET No.	TOTAL SHEETS
07	LA	5,10,14, 47,60,etc	Var	66	72

Randell D. Hiatt
REGISTERED CIVIL ENGINEER

May 20, 2011
PLANS APPROVAL DATE

REGISTERED PROFESSIONAL ENGINEER
Randell D. Hiatt
No. C50200
Exp. 6-30-11
CIVIL
STATE OF CALIFORNIA

The State of California or its officers or agents shall not be responsible for the accuracy or completeness of electronic copies of this plan sheet.

To accompany plans dated 10-22-12

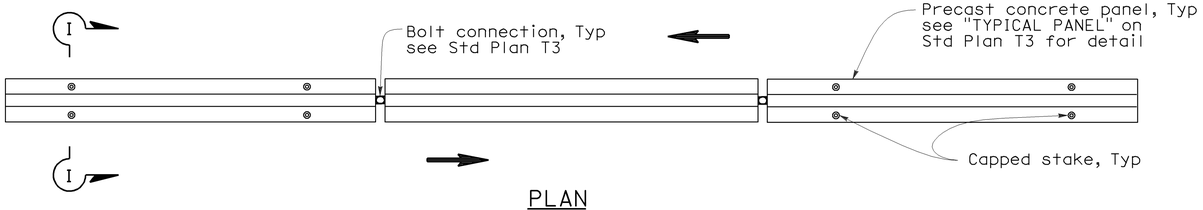

PLAN

RAILING STAKING CONFIGURATION FOR TWO-WAY TRAFFIC

See Note 1

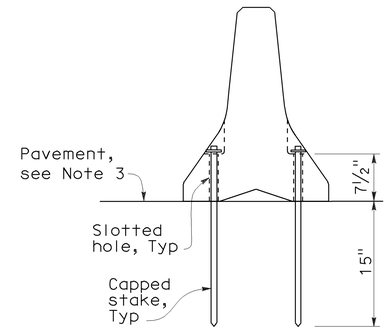

SECTION I-I

NOTES:

1. Where Type K Temporary Railing is placed as a temporary or long term barrier in two-way traffic on highways with less than 24" from the edge of traveled way, use four capped stakes per every other panel with end panels staked.
2. Where Type K Temporary Railing is placed 3" to 24" from the edge of an excavation on highways, use two capped stakes per panel along the traffic side.
3. Staked Type K Temporary Railing must be supported by at least 4" thick concrete, hot mix asphalt or existing asphalt concrete pavement.
4. The minimum yield strength for the washer must be 60,000 psi.
5. Direction of adjacent traffic indicated by ⟹.

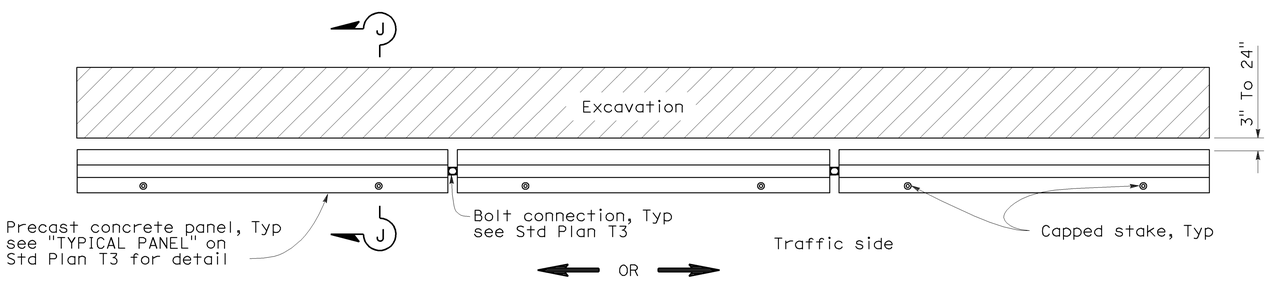

PLAN

RAILING STAKING CONFIGURATION ADJACENT TO AN EXCAVATION

See Note 2

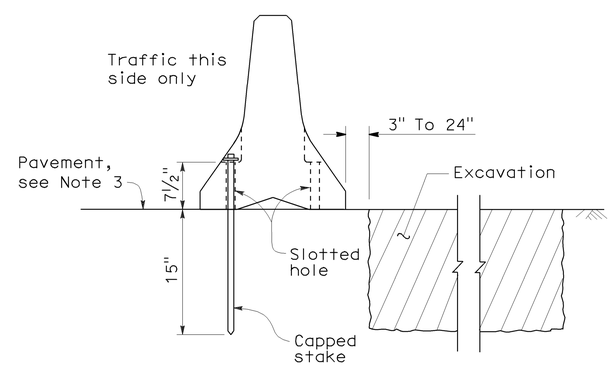

SECTION J-J

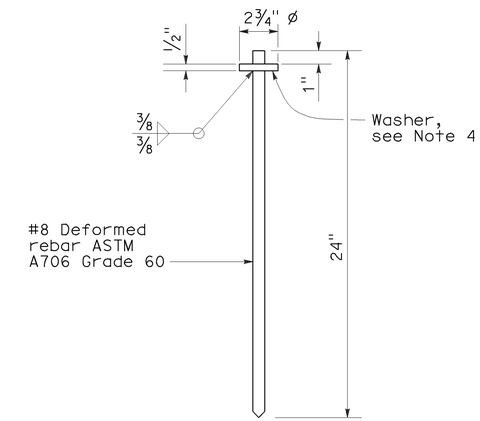

CAPPED STAKE DETAIL

STATE OF CALIFORNIA
DEPARTMENT OF TRANSPORTATION

TEMPORARY RAILING (TYPE K)

NO SCALE

NSP T3A DATED MAY 20, 2011 SUPPLEMENTS
THE STANDARD PLANS BOOK DATED MAY 2006.

NEW STANDARD PLAN NSP T3A

2006 NEW STANDARD PLAN NSP T3A

DIST	COUNTY	ROUTE	POST MILES TOTAL PROJECT	SHEET NO.	TOTAL SHEETS
07	LA	5,10,14, 47,60,etc	Var	67	72

REGISTERED CIVIL ENGINEER

November 17, 2006
PLANS APPROVAL DATE

REGISTERED PROFESSIONAL ENGINEER — Greg W. Edwards — No. C36386 — Exp. 6-30-08 — CIVIL — STATE OF CALIFORNIA

The State of California or its officers or agents shall not be responsible for the accuracy or completeness of electronic copies of this plan sheet.

To accompany plans dated 10-22-12

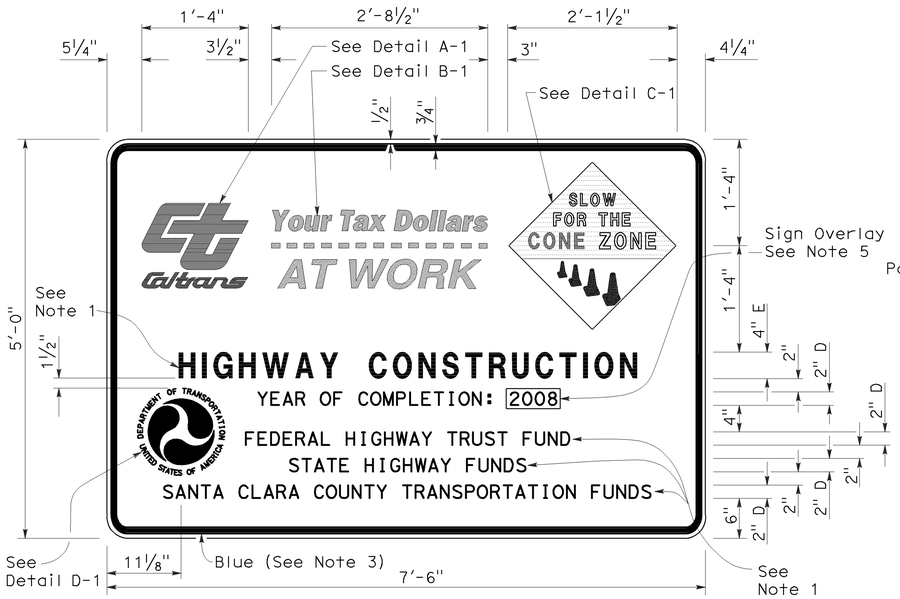

TYPE 1

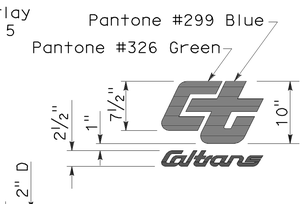

DETAIL A-1

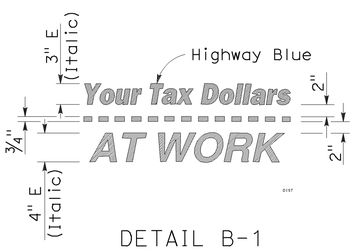

DETAIL B-1
(See Note 3)

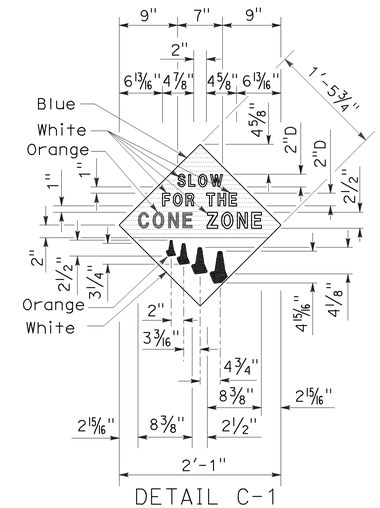

DETAIL C-1
(See Note 4)

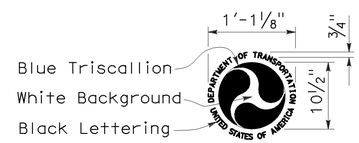

DETAIL D-1
(See Note 6)

NOTES:

1. The sign messages shown for type of project and fund types are examples only. See the Special Provisions for the applicable type of project and fund type messages to be used.
2. Except as otherwise shown, the legend of sign shall be black on a white background (non-reflective).
3. The border of the signs and details "B-1" and "B-2" shall be blue (non-reflective).
4. The diamond in details "C-1" and "C-2" shall be blue for the background of message, " SLOW FOR THE CONE ZONE", and white background for the orange cones. The color and type of font for the "SLOW FOR THE CONE ZONE" message shall be: "SLOW" white D; "FOR THE" white D; "CONE" orange Arial font; "ZONE" white Arial font.
5. Year of completion of project construction shown on the overlay is an example only. See the Special Provisions.
6. Use when the Project involves Federal Highway Trust Fund.

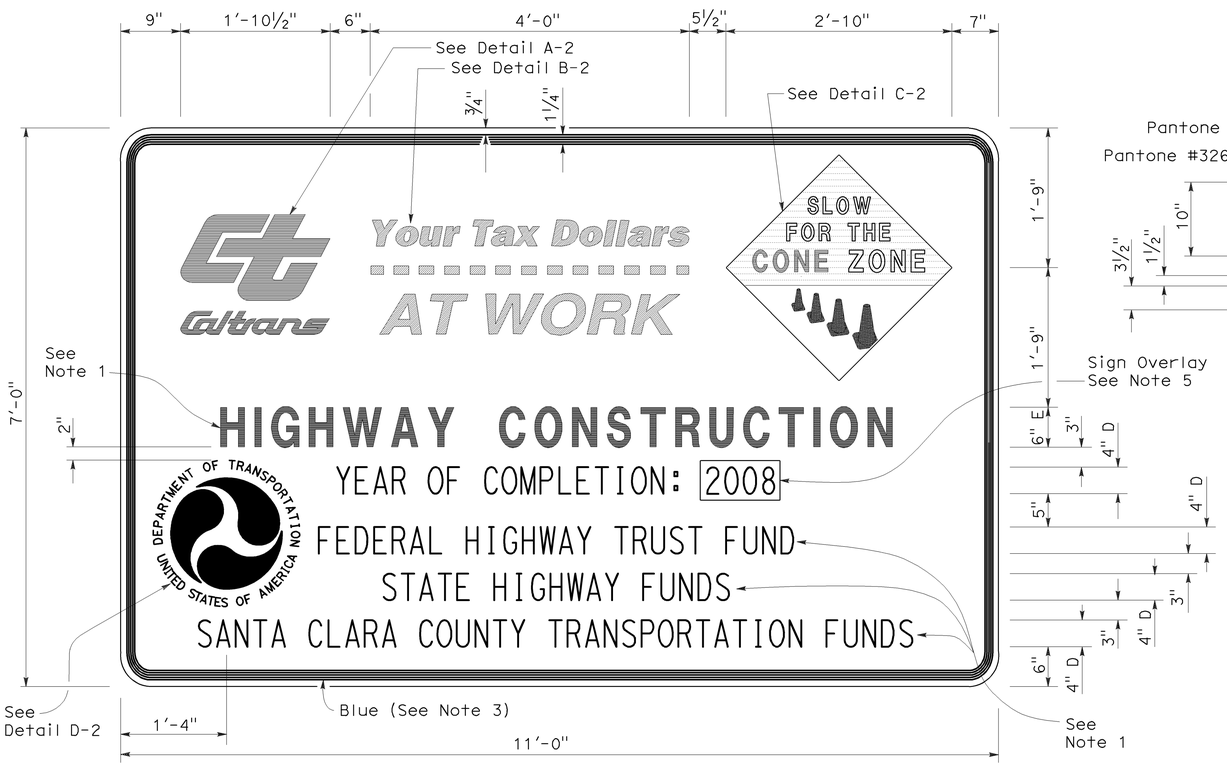

TYPE 2

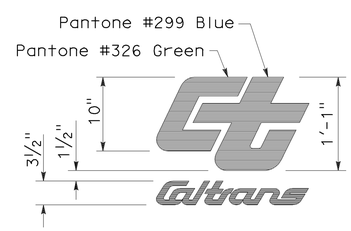

DETAIL A-2

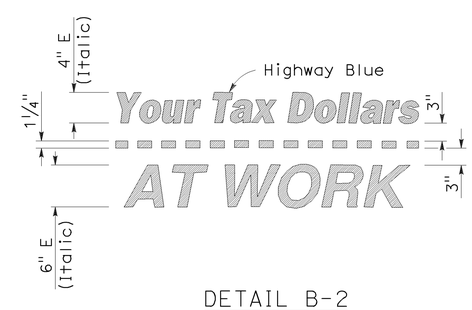

DETAIL B-2
(See Note 3)

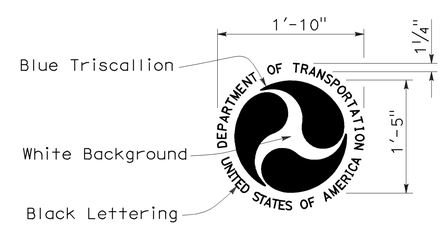

DETAIL D-2
(See Note 6)

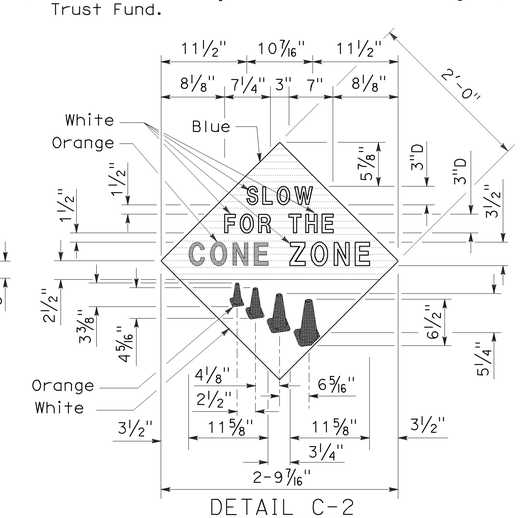

DETAIL C-2
(See Note 4)

STATE OF CALIFORNIA
DEPARTMENT OF TRANSPORTATION

CONSTRUCTION PROJECT FUNDING IDENTIFICATION SIGNS

NO SCALE

RSP T7 DATED NOVEMBER 17, 2006 SUPERSEDES STANDARD PLAN T7
DATED MAY 1, 2006 - PAGE 217 OF THE STANDARD PLANS BOOK DATED MAY 2006.

REVISED STANDARD PLAN RSP T7

2006 REVISED STANDARD PLAN RSP T7

9-7-06

DIST	COUNTY	ROUTE	POST MILES TOTAL PROJECT	SHEET NO.	TOTAL SHEETS
07	LA	5,10,14, 47,60,etc	Var	68	72

LICENSED LANDSCAPE ARCHITECT

April 3, 2009
PLANS APPROVAL DATE

The State of California or its officers or agents shall not be responsible for the accuracy or completeness of electronic copies of this plan sheet.

LICENSED LANDSCAPE ARCHITECT — Robert B. Schott 3635 — 11-30-10 Renewal Date — 2-25-09 Date — STATE OF CALIFORNIA

To accompany plans dated 10-22-12

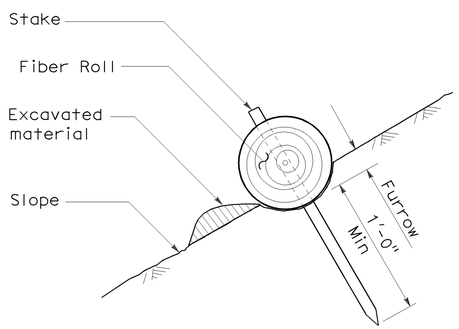

SECTION

TEMPORARY FIBER ROLL (TYPE 1)

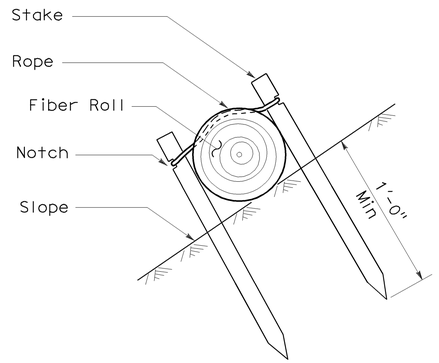

SECTION

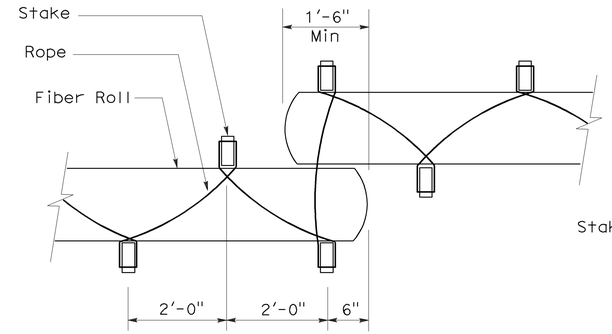

PLAN

TEMPORARY FIBER ROLL (TYPE 2)

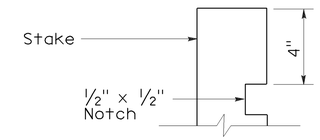

ELEVATION

STAKE NOTCH DETAIL

NOTES:

1. Temporary fiber roll spacing varies depending upon slope inclination.
2. Installations shown in the perspectives are for slope inclination of 10:1 and steeper.

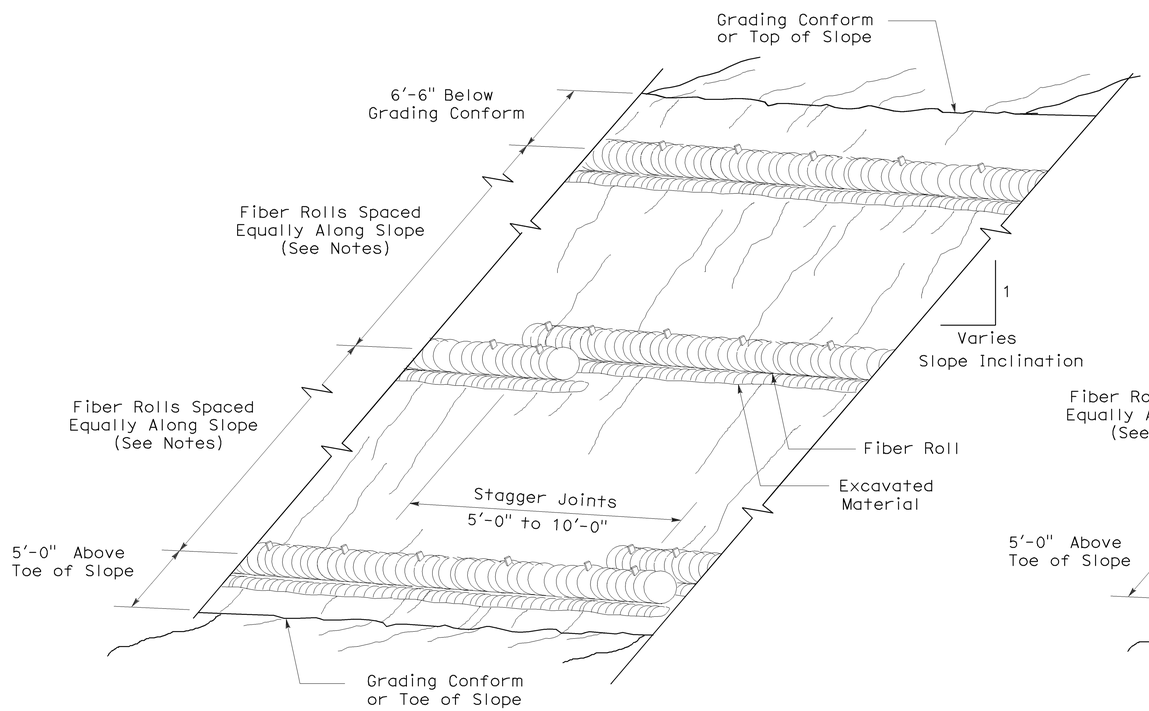

PERSPECTIVE

TEMPORARY FIBER ROLL (TYPE 1)

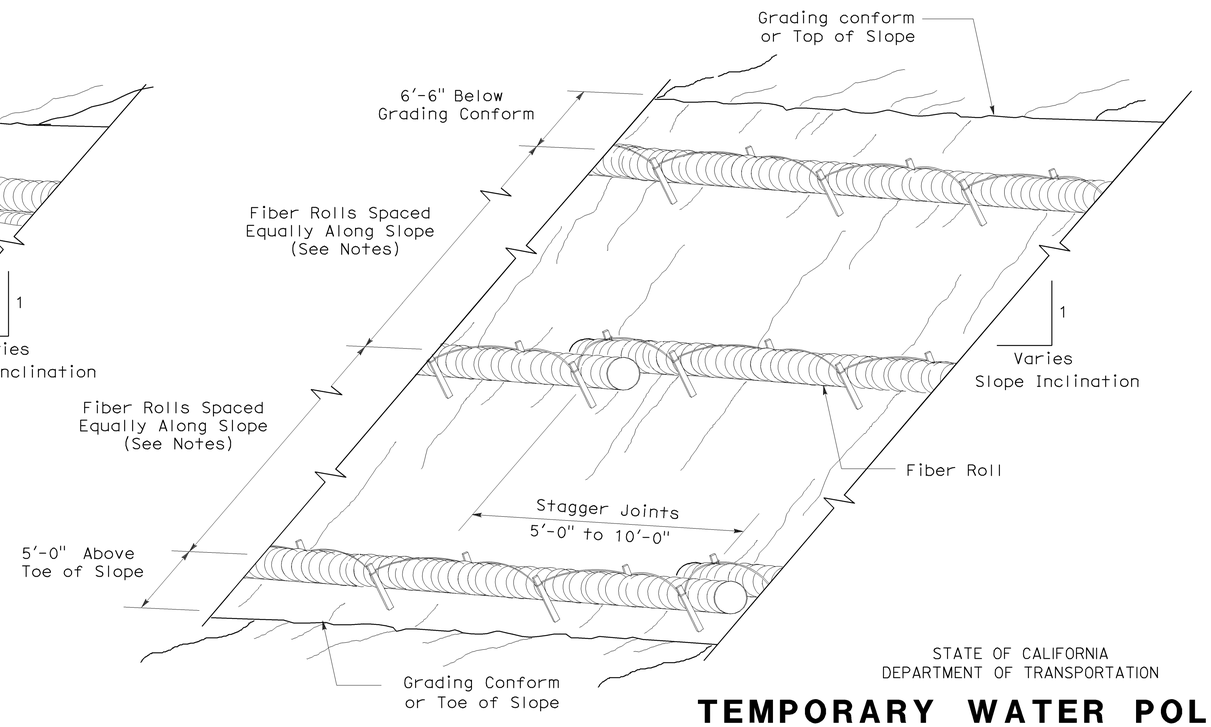

PERSPECTIVE

TEMPORARY FIBER ROLL (TYPE 2)

STATE OF CALIFORNIA
DEPARTMENT OF TRANSPORTATION

TEMPORARY WATER POLLUTION CONTROL DETAILS (TEMPORARY FIBER ROLL)

NO SCALE

RSP T56 DATED APRIL 3, 2009 SUPERSEDES STANDARD PLAN T56
DATED MAY 1, 2006 - PAGE 232 OF THE STANDARD PLANS BOOK DATED MAY 2006.

REVISED STANDARD PLAN RSP T56

2006 REVISED STANDARD PLAN RSP T56

DIST	COUNTY	ROUTE	POST MILES TOTAL PROJECT	SHEET NO.	TOTAL SHEETS
07	LA	5,10,14, 47,60,etc	Var	69	72

LICENSED LANDSCAPE ARCHITECT

August 15, 2008
PLANS Approval DATE

The State of California or its officers or agents shall not be responsible for the accuracy or completeness of electronic copies of this plan sheet.

LICENSED LANDSCAPE ARCHITECT
Robert B. Schott 3635
Signature
11-04-08
Renewal Date
08-11-08
Date
STATE OF CALIFORNIA

To accompany plans dated 10-22-12

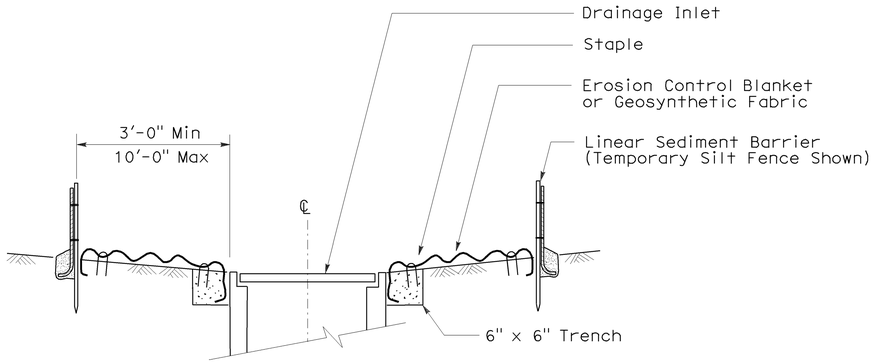

SECTION A-A

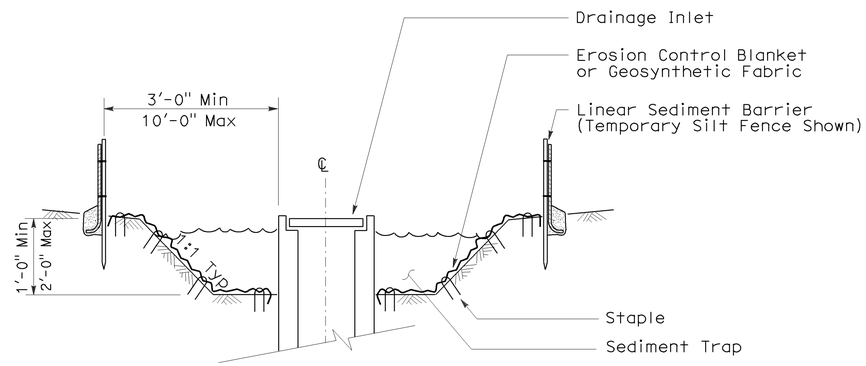

SECTION B-B

NOTES:

1. See Standard Plan T51 for Temporary Silt Fence.
2. Dimensions may vary to fit field conditions.

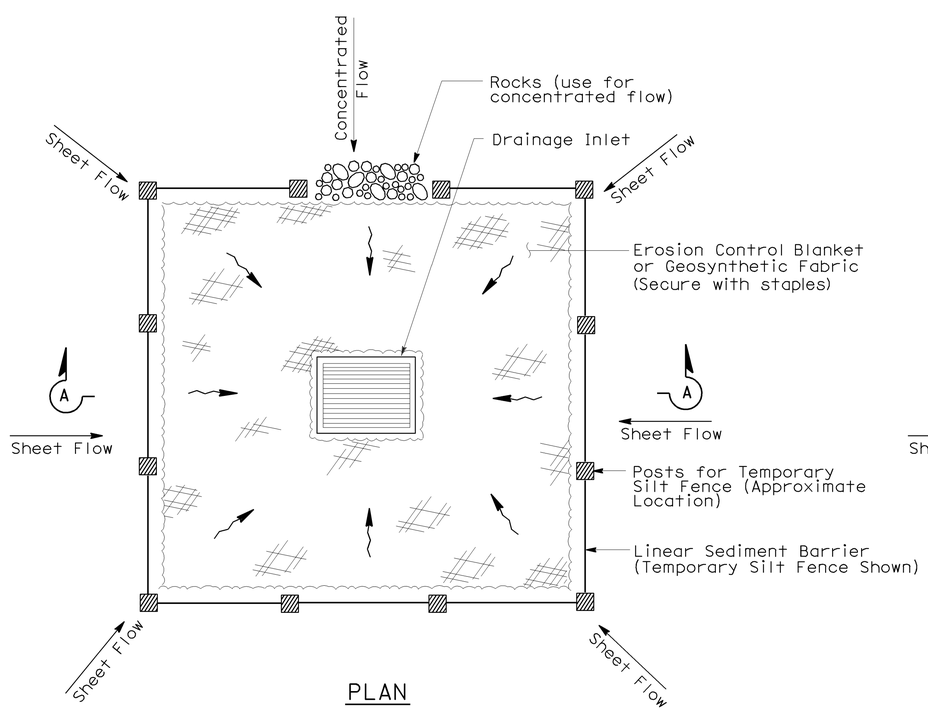

PLAN

TEMPORARY DRAINAGE INLET PROTECTION (TYPE 1)

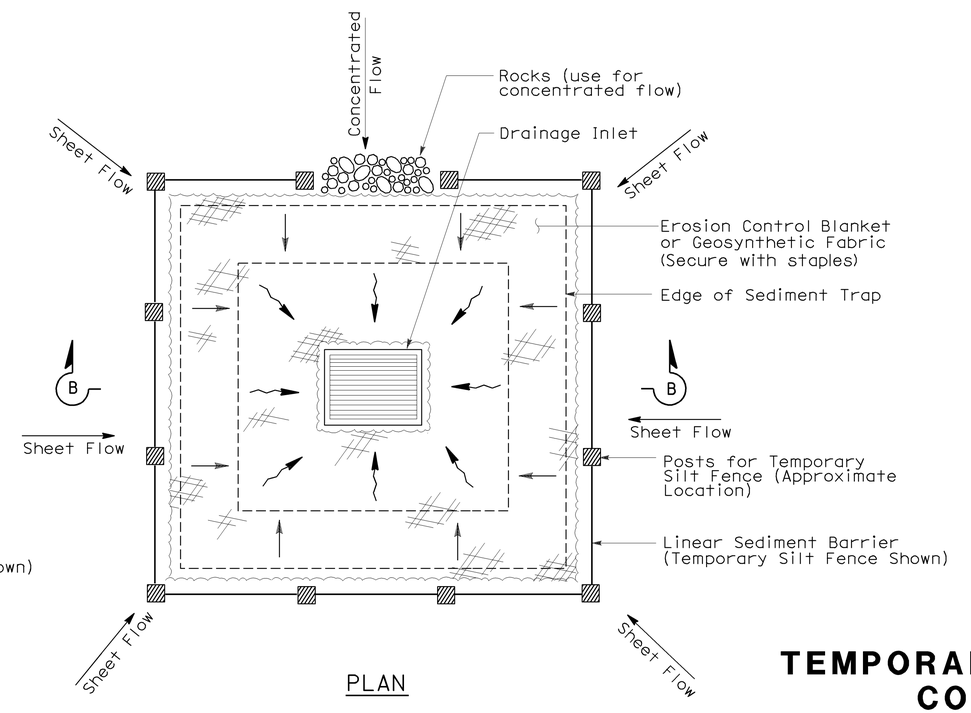

PLAN

TEMPORARY DRAINAGE INLET PROTECTION (TYPE 2) (EXCAVATED SEDIMENT TRAP)

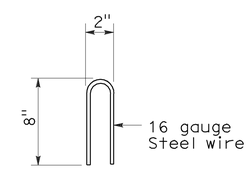

STAPLE DETAIL

STATE OF CALIFORNIA
DEPARTMENT OF TRANSPORTATION

TEMPORARY WATER POLLUTION CONTROL DETAILS (TEMPORARY DRAINAGE INLET PROTECTION)

NO SCALE

NSP T61 DATED AUGUST 15, 2008 SUPPLEMENTS THE STANDARD PLANS BOOK DATED MAY 2006.

NEW STANDARD PLAN NSP T61

2006 NEW STANDARD PLAN NSP T61

7-11-08

DIST	COUNTY	ROUTE	POST MILES TOTAL PROJECT	SHEET NO.	TOTAL SHEETS
07	LA	5,10,14, 47,60,etc	Var	70	72

Robert B Schott
LICENSED LANDSCAPE ARCHITECT

August 15, 2008
PLANS APPROVAL DATE

LICENSED LANDSCAPE ARCHITECT
Robert B. Schott 3695
Signature
11-04-08
Renewal Date
08-11-08
Date
STATE OF CALIFORNIA

The State of California or its officers or agents shall not be responsible for the accuracy or completeness of electronic copies of this plan sheet.

To accompany plans dated 10-22-12

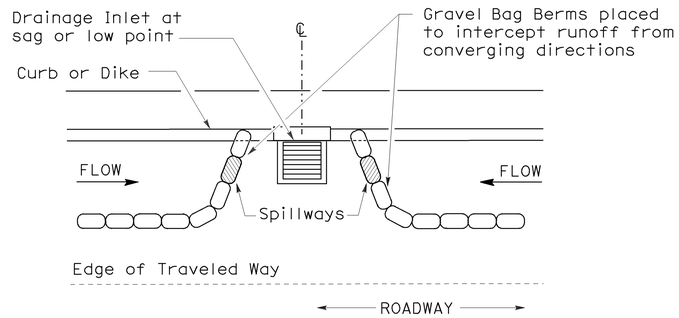

PLAN

CONFIGURATION FOR SAG POINT INLET (GRAVEL BAG BERM)

GRAVEL BAG BERM (TYPE 3A) SPACING TABLE

SLOPE OF ROADWAY (PERCENT)	1 to 3.9	4 to 5.9	6 to 7.9	8 to 10	10+
INTERVAL BETWEEN BERM	100′	75′	50′	25′	12′

For slope of less than 1%, install barriers only if erosion/sediment is prevalent

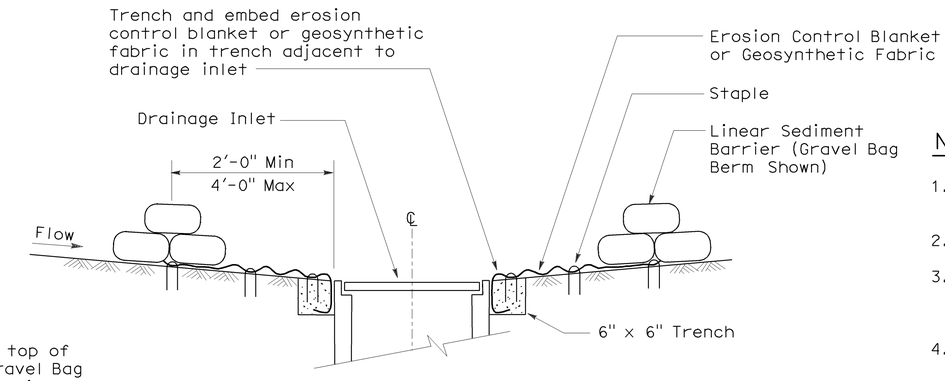

SECTION A-A

NOTES:

1. Place safety cones adjacent to drainage inlet protection.
2. Dimensions may vary to fit field conditions.
3. Install a minimum of 3 gravel bag berms upstream of each drainage inlet to be protected.
4. Position erosion control blanket or geosynthetic fabric at edge of concrete apron and secure in trench.
5. Erosion control blanket or geosynthetic fabric is not required if the area adjacent to the drainage inlet is vegetated or paved.

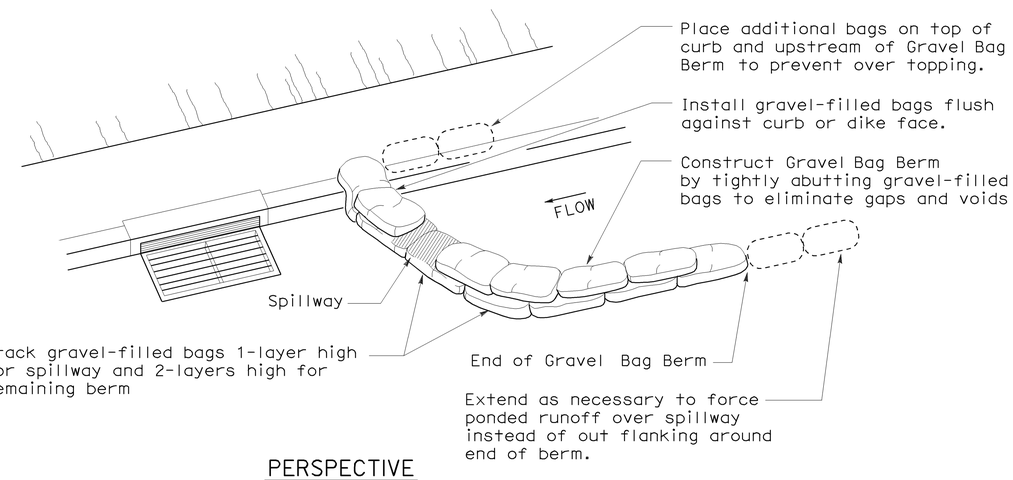

PERSPECTIVE

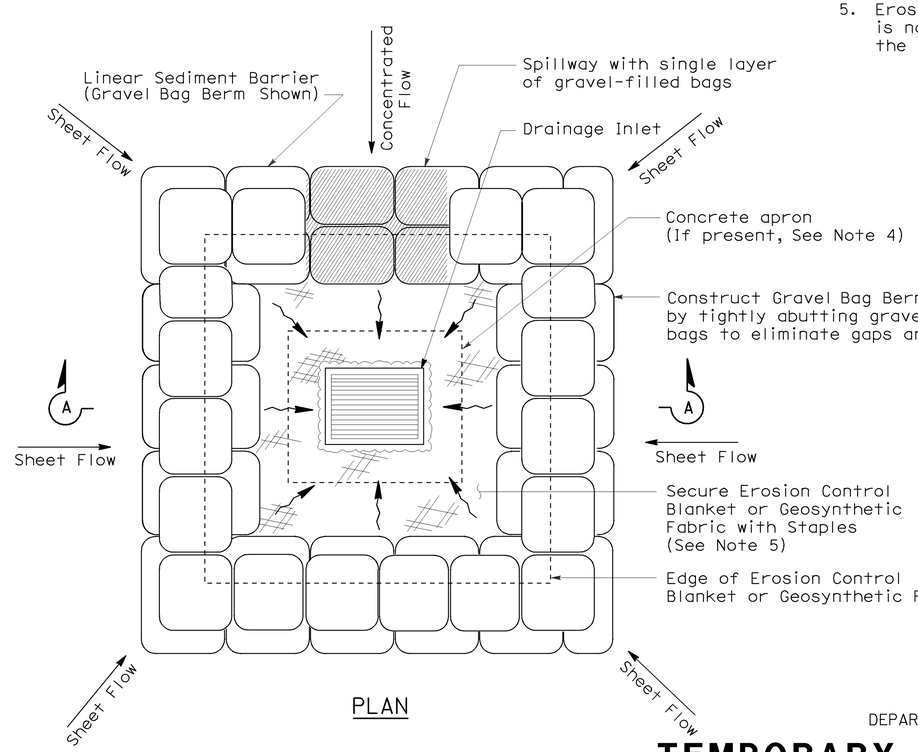

PLAN

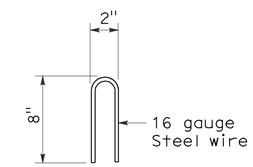

STAPLE DETAIL

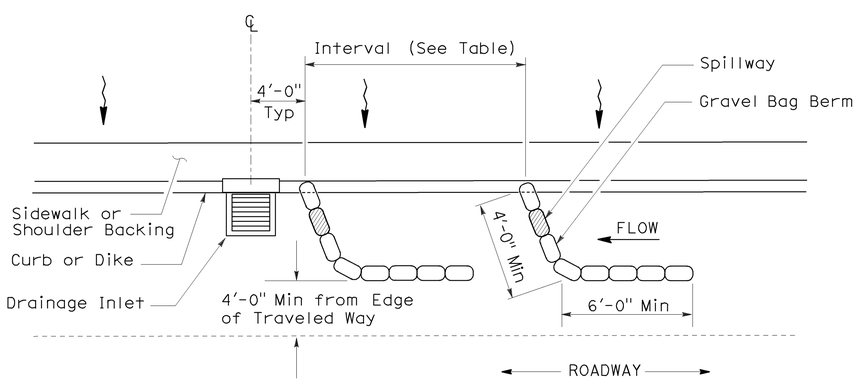

PLAN

TEMPORARY DRAINAGE INLET PROTECTION (TYPE 3A) (GRAVEL BAG BERM)

TEMPORARY DRAINAGE INLET PROTECTION (TYPE 3B)

STATE OF CALIFORNIA
DEPARTMENT OF TRANSPORTATION

TEMPORARY WATER POLLUTION CONTROL DETAILS (TEMPORARY DRAINAGE INLET PROTECTION)

NO SCALE

NSP T62 DATED AUGUST 15, 2008 SUPPLEMENTS
THE STANDARD PLANS BOOK DATED MAY 2006.

NEW STANDARD PLAN NSP T62

2006 NEW STANDARD PLAN NSP T62

7-11-08

DIST	COUNTY	ROUTE	POST MILES TOTAL PROJECT	SHEET NO.	TOTAL SHEETS
07	LA	5,10,14, 47,60,etc	Var	71	72

LICENSED LANDSCAPE ARCHITECT

August 15, 2008
PLANS APPROVAL DATE

LICENSED LANDSCAPE ARCHITECT Robert B. Schott 3635 Signature 11-04-08 Renewal Date 08-11-08 Date STATE OF CALIFORNIA

The State of California or its officers or agents shall not be responsible for the accuracy or completeness of electronic copies of this plan sheet.

To accompany plans dated 10-22-12

FLEXIBLE SEDIMENT BARRIER SPACING TABLE

SLOPE OF ROADWAY (PERCENT)	0 to 0.9	1 to 1.9	2 to 2.9	3 to 4	5+
INTERVAL BETWEEN BARRIERS	50′	35′	30′	25′	20′
ANGLE FROM FACE OF CURB	70°	70°	70°	45°	45°
SUGGESTED BARRIER LENGTH	6′	6′	6′	6′	6′

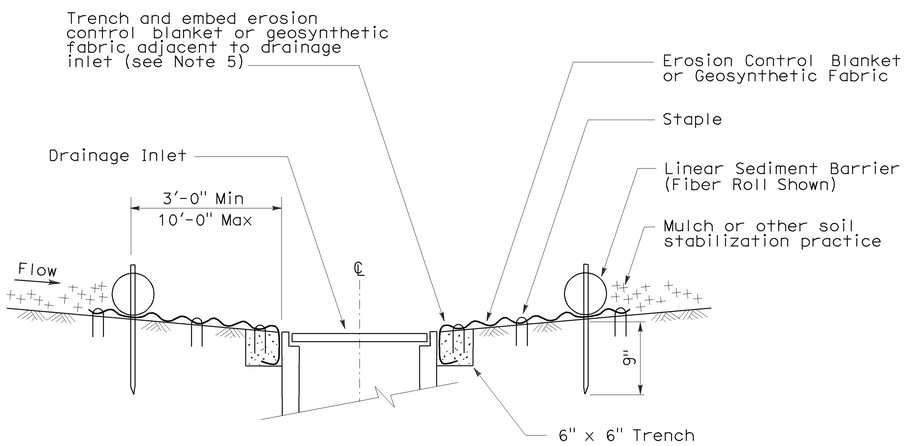

SECTION A-A

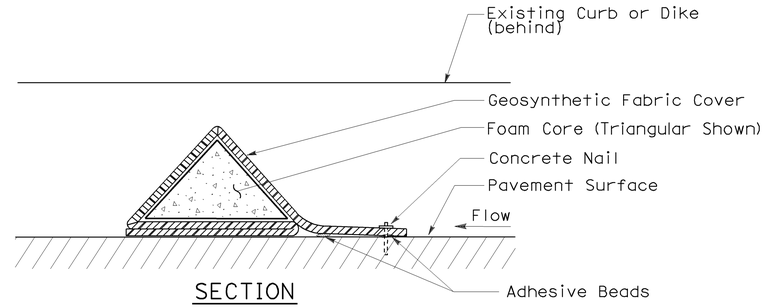

SECTION

FLEXIBLE SEDIMENT BARRIER DETAIL (FOAM BARRIER SHOWN)

NOTES:

1. See Standard Plan T51 for Temporary Silt Fence.
2. Dimensions may vary to fit field conditions.
3. Install a minimum of 3 flexible sediment barriers upstream of each drainage inlet to be protected.
4. Position erosion control blanket or geosynthetic fabric at edge of concrete apron and secure in trench.
5. Erosion control blanket or geosynthetic fabric is not required if the area adjacent to the drainage inlet is vegetated.

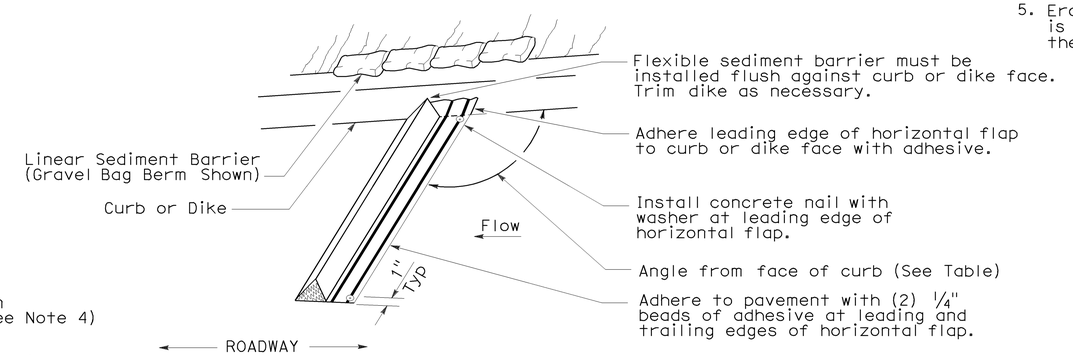

PERSPECTIVE

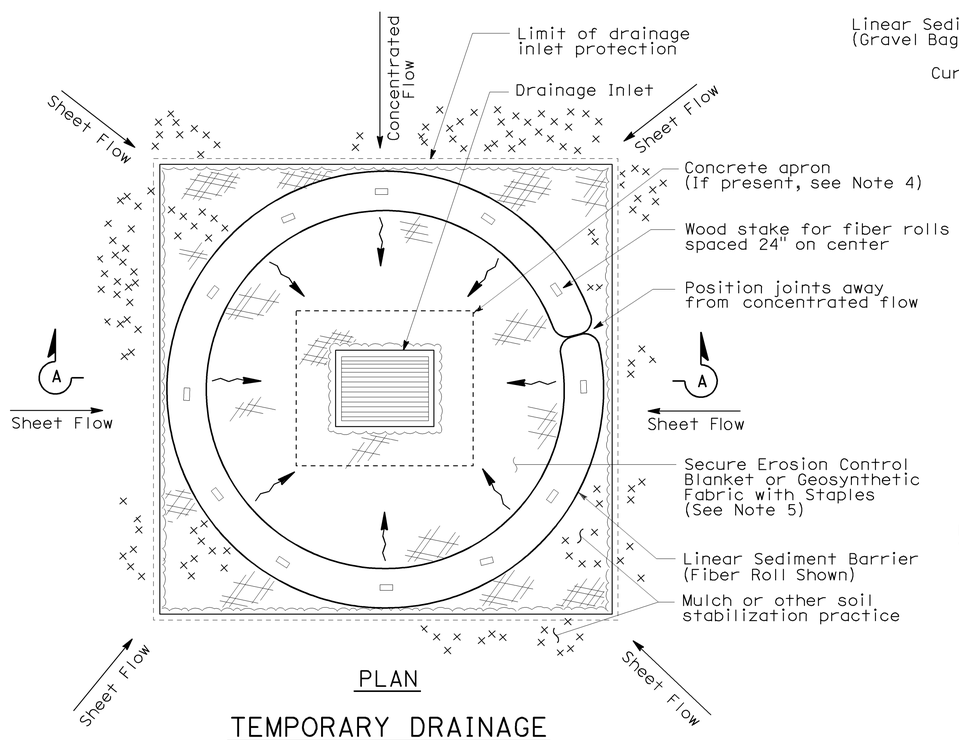

PLAN

TEMPORARY DRAINAGE INLET PROTECTION (TYPE 4A)

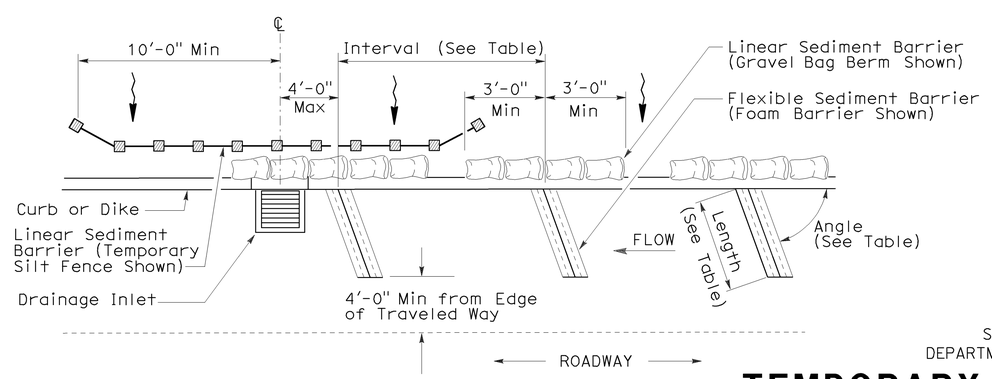

PLAN

TEMPORARY DRAINAGE INLET PROTECTION (TYPE 4B) FLEXIBLE SEDIMENT BARRIER

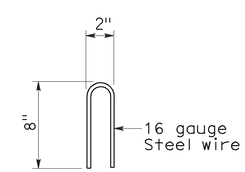

STAPLE DETAIL

STATE OF CALIFORNIA
DEPARTMENT OF TRANSPORTATION

TEMPORARY WATER POLLUTION CONTROL DETAILS (TEMPORARY DRAINAGE INLET PROTECTION)

NO SCALE

NSP T63 DATED AUGUST 15, 2008 SUPPLEMENTS THE STANDARD PLANS BOOK DATED MAY 2006.

NEW STANDARD PLAN NSP T63

2006 NEW STANDARD PLAN NSP T63

7-11-08

DIST	COUNTY	ROUTE	POST MILES TOTAL PROJECT	SHEET NO.	TOTAL SHEETS
07	LA	5,10,14, 47,60,etc	Var	72	72

LICENSED LANDSCAPE ARCHITECT

August 15, 2008
PLANS APPROVAL DATE

LICENSED LANDSCAPE ARCHITECT
Robert B. Schott 3635
Signature
11-04-08
Renewal Date
08-11-08
Date
STATE OF CALIFORNIA

The State of California or its officers or agents shall not be responsible for the accuracy or completeness of electronic copies of this plan sheet.

To accompany plans dated 10-22-12

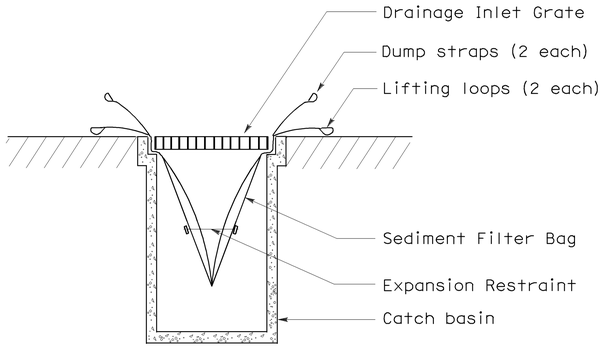

SECTION B-B

SEDIMENT FILTER BAG DETAIL

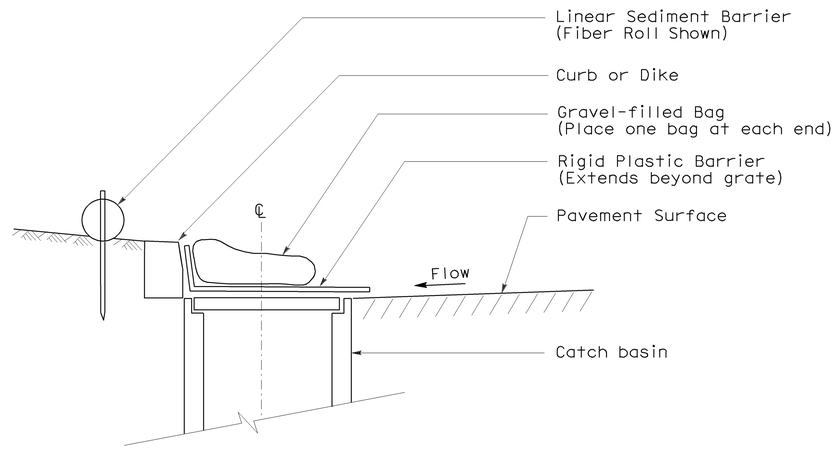

SECTION

TEMPORARY DRAINAGE INLET PROTECTION (TYPE 6A) (CATCH BASIN WITH GRATE)

NOTES:

1. See Standard Plan T51 for Temporary Silt Fence.
2. Dimensions may vary to fit field conditions.

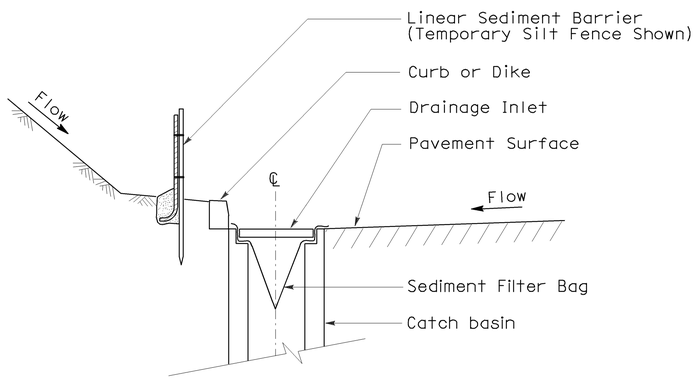

SECTION A-A

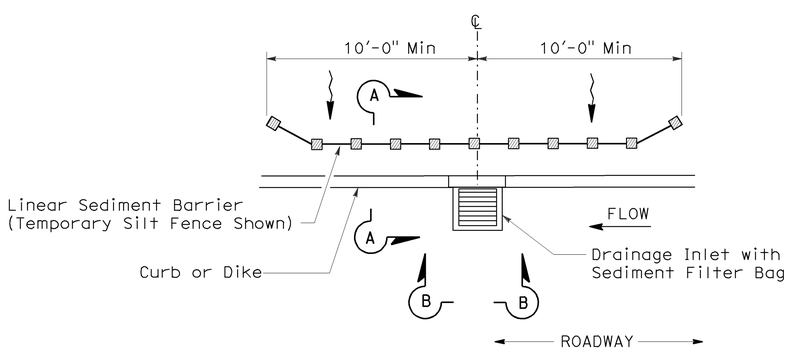

PLAN

TEMPORARY DRAINAGE INLET PROTECTION (TYPE 5) (SEDIMENT FILTER BAG)

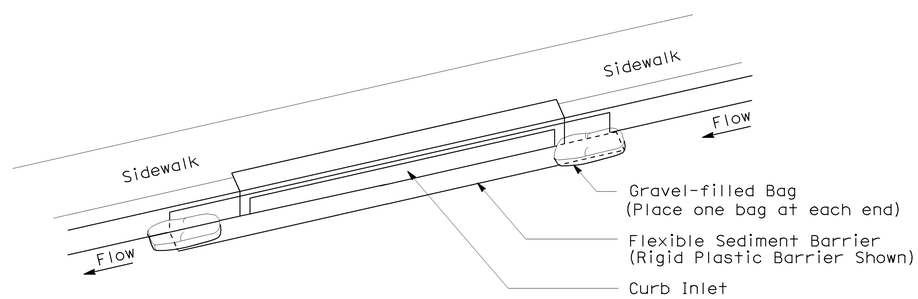

PERSPECTIVE

TEMPORARY DRAINAGE INLET PROTECTION (TYPE 6B) (CURB INLET WITHOUT GRATE)

STATE OF CALIFORNIA
DEPARTMENT OF TRANSPORTATION

TEMPORARY WATER POLLUTION CONTROL DETAILS (TEMPORARY DRAINAGE INLET PROTECTION)

NO SCALE

NSP T64 DATED AUGUST 15, 2008 SUPPLEMENTS
THE STANDARD PLANS BOOK DATED MAY 2006.

NEW STANDARD PLAN NSP T64

2006 NEW STANDARD PLAN NSP T64

7-11-08