NOTE: FOR COMPLETE RIGHT OF WAY AND ACCURATE ACCESS DATA, SEE RIGHT OF WAY RECORD MAPS AT DISTRICT OFFICE.

Dist	COUNTY	ROUTE	POST MILES TOTAL PROJECT	SHEET No.	TOTAL SHEETS
08	Riv	91	15.6/21.6	201	2028

REGISTERED CIVIL ENGINEER 4-21-11 DATE

4-25-11
PLANS APPROVAL DATE

REGISTERED PROFESSIONAL ENGINEER THOMAS HIEN NGO No. 68383 Exp. 9/30/11 CIVIL STATE OF CALIFORNIA

THE STATE OF CALIFORNIA OR ITS OFFICERS OR AGENTS SHALL NOT BE RESPONSIBLE FOR THE ACCURACY OR COMPLETENESS OF SCANNED COPIES OF THIS PLAN SHEET.

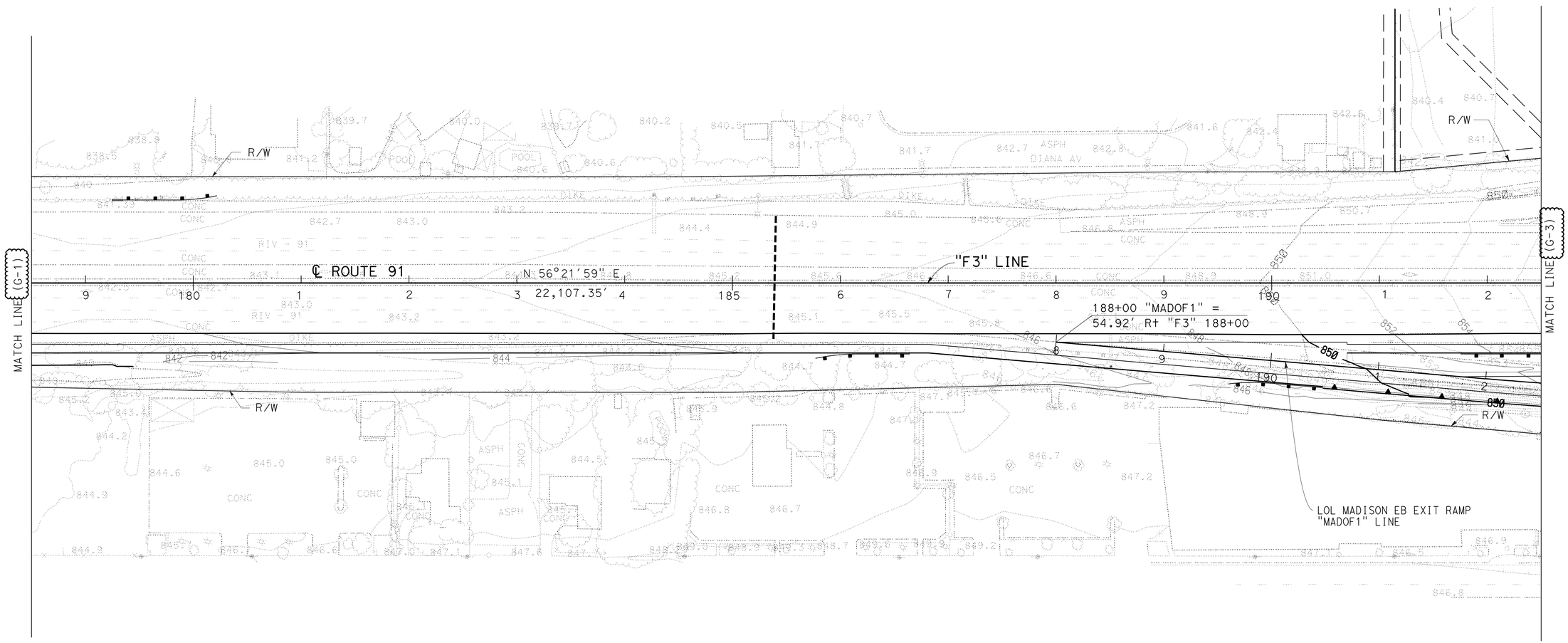

CONTOUR GRADING

SCALE 1" = 50'

G-2

REVISED BY	DATE REVISED
THAI VAN HGUYEN	
THOMAS HIEN NGO	

CALCULATED-DESIGNED BY
CHECKED BY

FUNCTIONAL SUPERVISOR
MARK PERTILE

STATE OF CALIFORNIA - DEPARTMENT OF TRANSPORTATION
Caltrans
DESIGN

LAST REVISION 04-21-11
DATE PLOTTED => 29-APR-2011
TIME PLOTTED => 17:27

Dist	COUNTY	ROUTE	POST MILES TOTAL PROJECT	SHEET No.	TOTAL SHEETS
08	Riv	91	15.6/21.6	202	2028

REGISTERED CIVIL ENGINEER 4-21-11 DATE

4-25-11
PLANS APPROVAL DATE

REGISTERED PROFESSIONAL ENGINEER THOMAS HIEN NGO No. 68383 Exp. 9/30/11 CIVIL STATE OF CALIFORNIA

THE STATE OF CALIFORNIA OR ITS OFFICERS OR AGENTS SHALL NOT BE RESPONSIBLE FOR THE ACCURACY OR COMPLETENESS OF SCANNED COPIES OF THIS PLAN SHEET.

NOTE: FOR COMPLETE RIGHT OF WAY AND ACCURATE ACCESS DATA, SEE RIGHT OF WAY RECORD MAPS AT DISTRICT OFFICE.

CURVE DATA				
NO.	R	Δ	T	L
1	6000.00′	01°25′53″	74.95′	149.90′

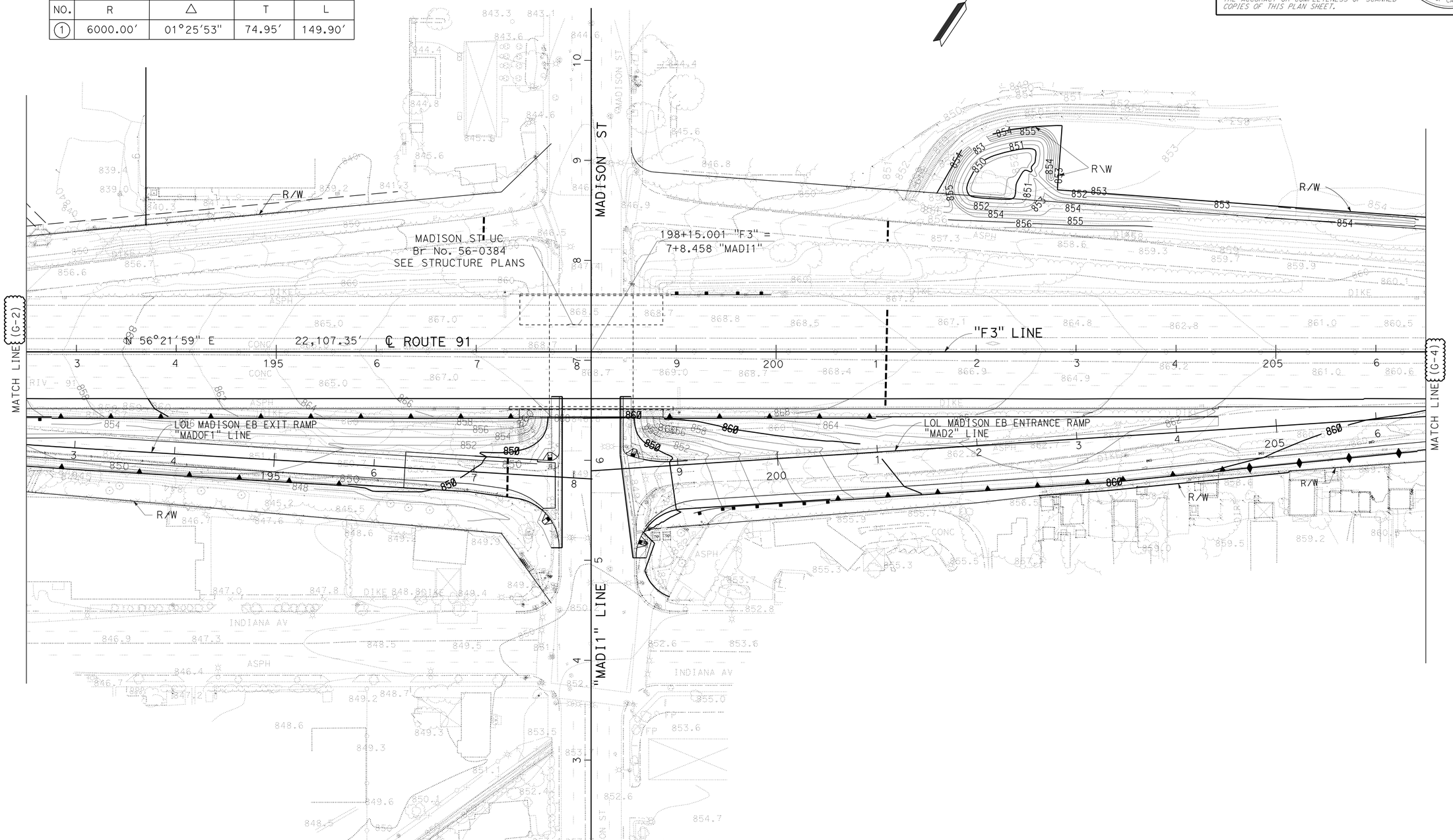

CONTOUR GRADING

SCALE: 1″ = 50′

G-3

STATE OF CALIFORNIA - DEPARTMENT OF TRANSPORTATION
Caltrans® DESIGN

FUNCTIONAL SUPERVISOR: MARK PERTILE
CALCULATED-DESIGNED BY: THAI VAN HGUYEN
CHECKED BY: THOMAS HIEN NGO
REVISED BY / DATE REVISED

LAST REVISION 04-21-11
DATE PLOTTED => 29-APR-2011
TIME PLOTTED => 17:27

BORDER LAST REVISED 4/11/2008
RELATIVE BORDER SCALE IS IN INCHES 0 1 2 3
USERNAME => trphils
DGN FILE => 844840ha003.dgn
CU 08227
EA 448401

NOTE: FOR COMPLETE RIGHT OF WAY AND ACCURATE ACCESS DATA, SEE RIGHT OF WAY RECORD MAPS AT DISTRICT OFFICE.

Dist	COUNTY	ROUTE	POST MILES TOTAL PROJECT	SHEET No.	TOTAL SHEETS
08	Riv	91	15.6/21.6	203	2028

REGISTERED CIVIL ENGINEER 4-21-11 DATE

4-25-11
PLANS APPROVAL DATE

REGISTERED PROFESSIONAL ENGINEER THOMAS HIEN NGO No. 68383 Exp. 9/30/11 CIVIL STATE OF CALIFORNIA

THE STATE OF CALIFORNIA OR ITS OFFICERS OR AGENTS SHALL NOT BE RESPONSIBLE FOR THE ACCURACY OR COMPLETENESS OF SCANNED COPIES OF THIS PLAN SHEET.

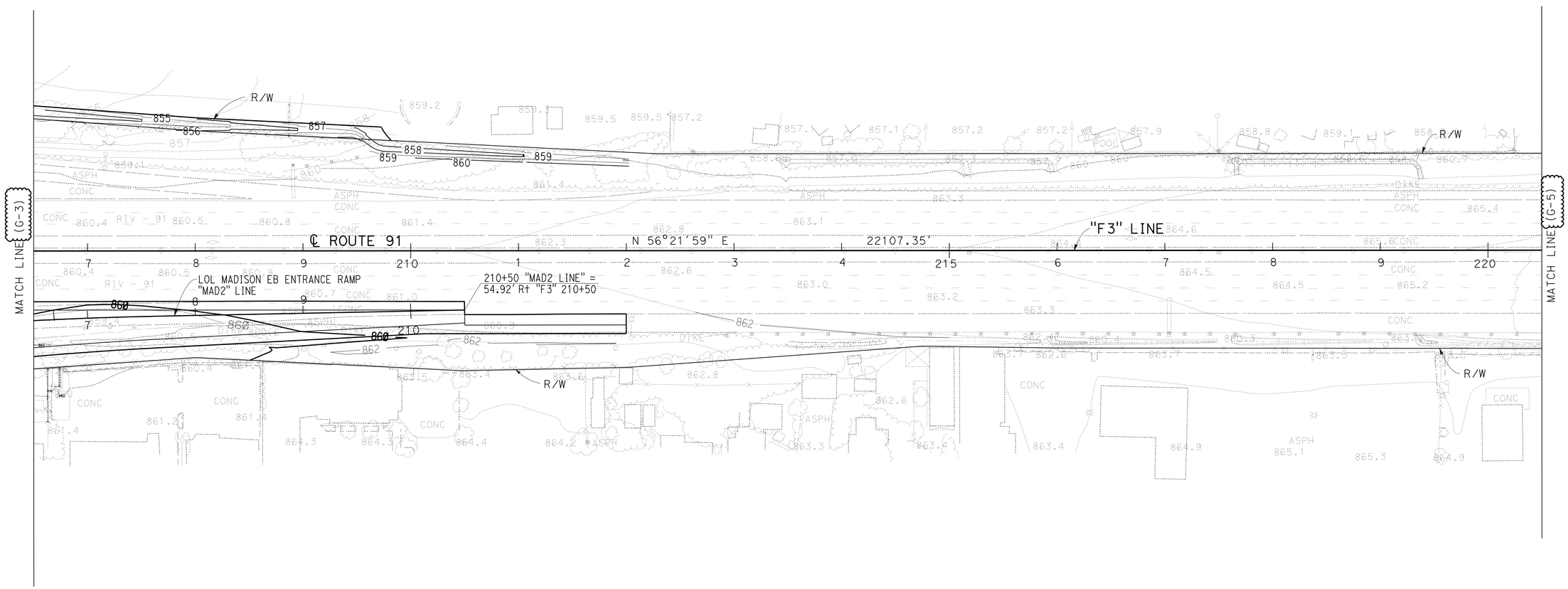

CONTOUR GRADING

SCALE: 1" = 50'

G-4

REVISED BY	DATE REVISED
THAI VAN HGUYEN	THOMAS HIEN NGO

CALCULATED-DESIGNED BY | CHECKED BY

FUNCTIONAL SUPERVISOR: MARK PERTILE

STATE OF CALIFORNIA - DEPARTMENT OF TRANSPORTATION

Caltrans® DESIGN

LAST REVISION 04-21-11 | DATE PLOTTED => 29-APR-2011 TIME PLOTTED => 17:28

Dist	COUNTY	ROUTE	POST MILES TOTAL PROJECT	SHEET No.	TOTAL SHEETS
08	Riv	91	15.6/21.6	204	2028

REGISTERED CIVIL ENGINEER 4-21-11 DATE

4-25-11
PLANS APPROVAL DATE

REGISTERED PROFESSIONAL ENGINEER THOMAS HIEN NGO No. 68383 Exp. 9/30/11 CIVIL STATE OF CALIFORNIA

THE STATE OF CALIFORNIA OR ITS OFFICERS OR AGENTS SHALL NOT BE RESPONSIBLE FOR THE ACCURACY OR COMPLETENESS OF SCANNED COPIES OF THIS PLAN SHEET.

NOTE: FOR COMPLETE RIGHT OF WAY AND ACCURATE ACCESS DATA, SEE RIGHT OF WAY RECORD MAPS AT DISTRICT OFFICE.

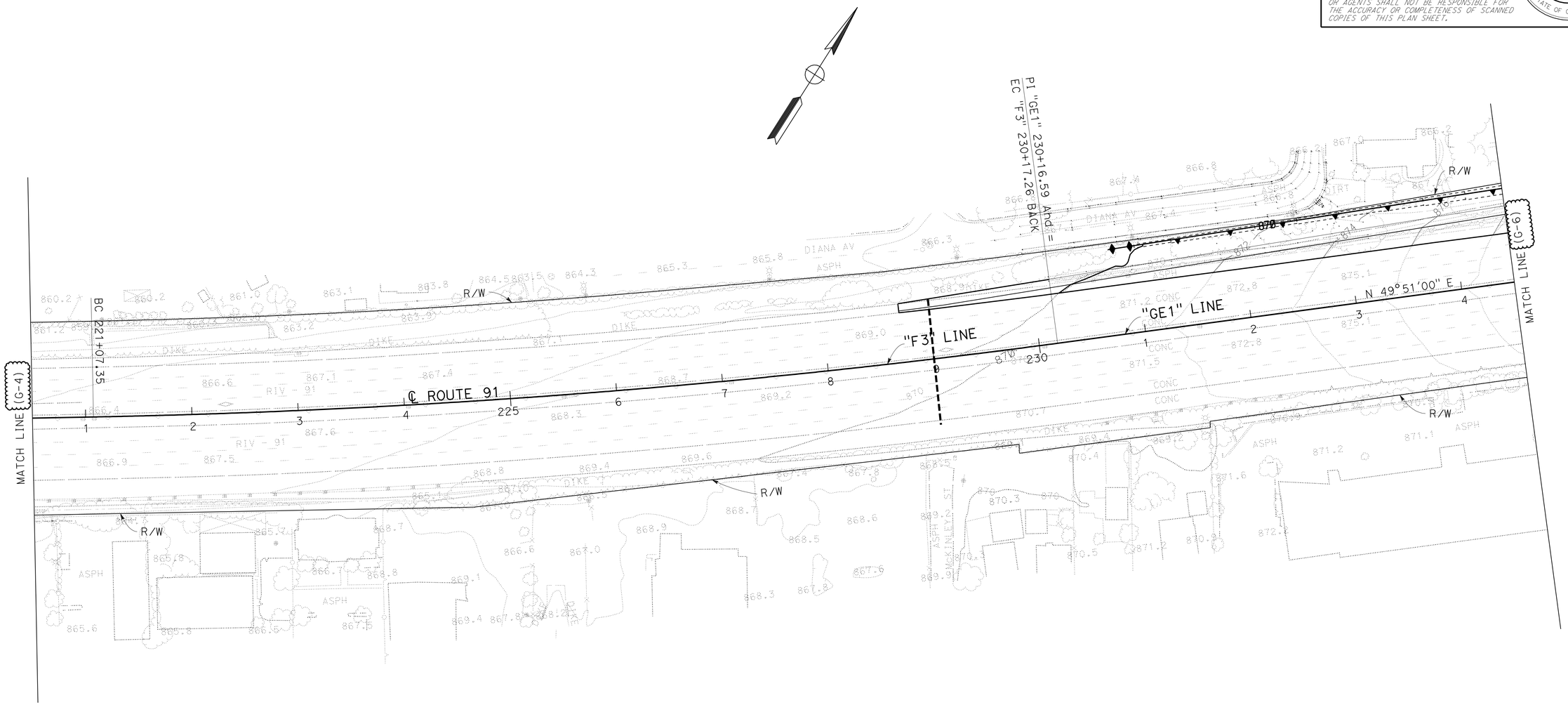

CONTOUR GRADING

SCALE: 1" = 50'

G-5

STATE OF CALIFORNIA - DEPARTMENT OF TRANSPORTATION
Caltrans
DESIGN

FUNCTIONAL SUPERVISOR: MARK PERTILE
CALCULATED-DESIGNED BY: THAI VAN HGUYEN
CHECKED BY: THOMAS HIEN NGO
REVISED BY
DATE REVISED

LAST REVISION 04-21-11
DATE PLOTTED => 29-APR-2011
TIME PLOTTED => 17:28

Dist	COUNTY	ROUTE	POST MILES TOTAL PROJECT	SHEET No.	TOTAL SHEETS
08	Riv	91	15.6/21.6	205	2028

REGISTERED CIVIL ENGINEER 4-21-11 DATE

4-25-11
PLANS APPROVAL DATE

REGISTERED PROFESSIONAL ENGINEER THOMAS HIEN NGO No. 68383 Exp. 9/30/11 CIVIL STATE OF CALIFORNIA

THE STATE OF CALIFORNIA OR ITS OFFICERS OR AGENTS SHALL NOT BE RESPONSIBLE FOR THE ACCURACY OR COMPLETENESS OF SCANNED COPIES OF THIS PLAN SHEET.

NOTE: FOR COMPLETE RIGHT OF WAY AND ACCURATE ACCESS DATA, SEE RIGHT OF WAY RECORD MAPS AT DISTRICT OFFICE.

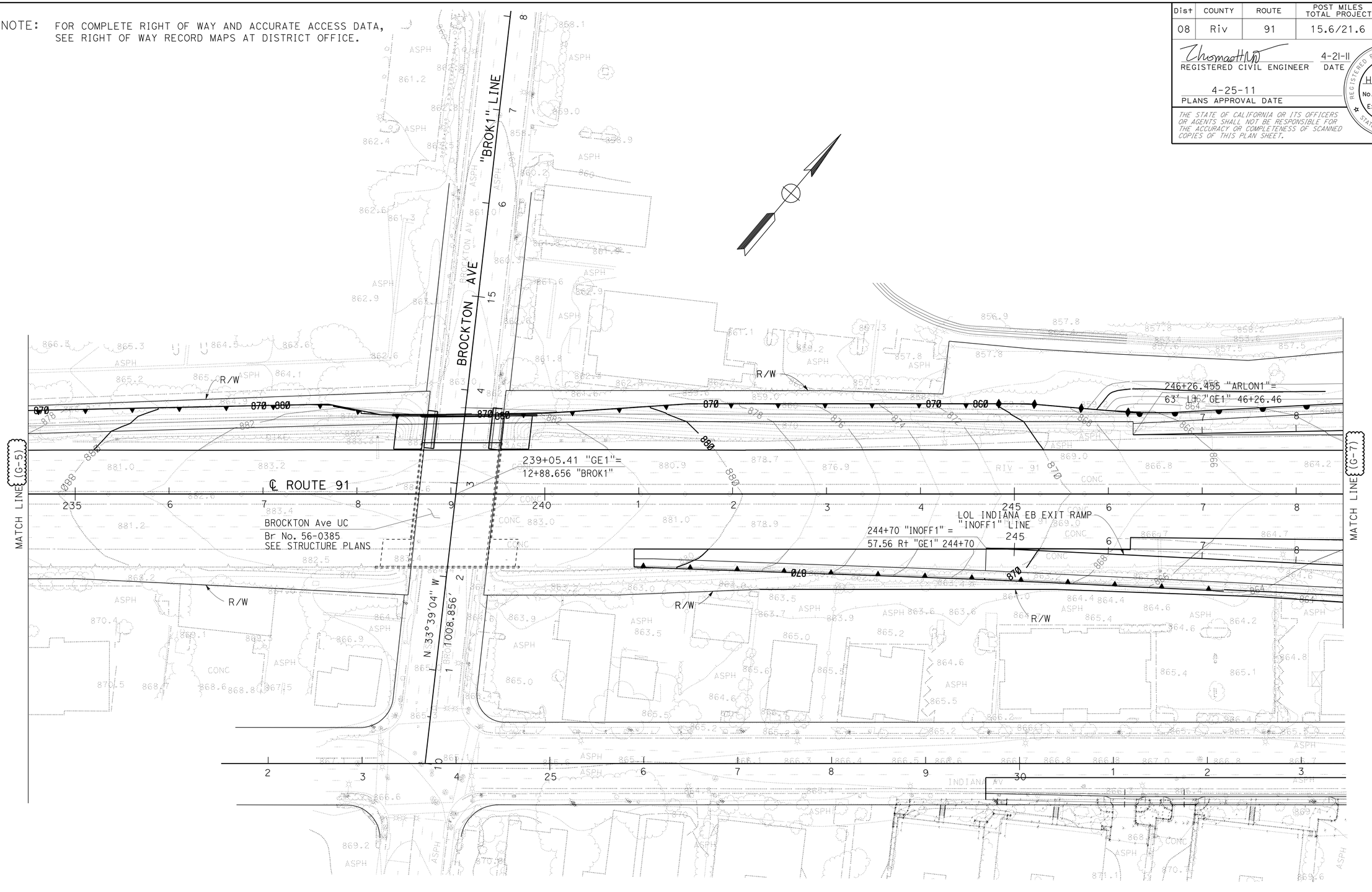

CONTOUR GRADING

SCALE: 1" = 50'

G-6

REVISED BY	DATE REVISED
THAI VAN HGUYEN	THOMAS HIEN NGO

CALCULATED-DESIGNED BY
CHECKED BY

FUNCTIONAL SUPERVISOR
MARK PERTILE

STATE OF CALIFORNIA - DEPARTMENT OF TRANSPORTATION
Caltrans
DESIGN

LAST REVISION 04-21-11
DATE PLOTTED => 29-APR-2011
TIME PLOTTED => 17:28

NOTE: FOR COMPLETE RIGHT OF WAY AND ACCURATE ACCESS DATA, SEE RIGHT OF WAY RECORD MAPS AT DISTRICT OFFICE.

Dist	COUNTY	ROUTE	POST MILES TOTAL PROJECT	SHEET No.	TOTAL SHEETS
08	Riv	91	15.6/21.6	206	2028

REGISTERED CIVIL ENGINEER 4-21-11 DATE

4-25-11
PLANS APPROVAL DATE

REGISTERED PROFESSIONAL ENGINEER THOMAS HIEN NGO No. 68383 Exp. 9/30/11 CIVIL STATE OF CALIFORNIA

THE STATE OF CALIFORNIA OR ITS OFFICERS OR AGENTS SHALL NOT BE RESPONSIBLE FOR THE ACCURACY OR COMPLETENESS OF SCANNED COPIES OF THIS PLAN SHEET.

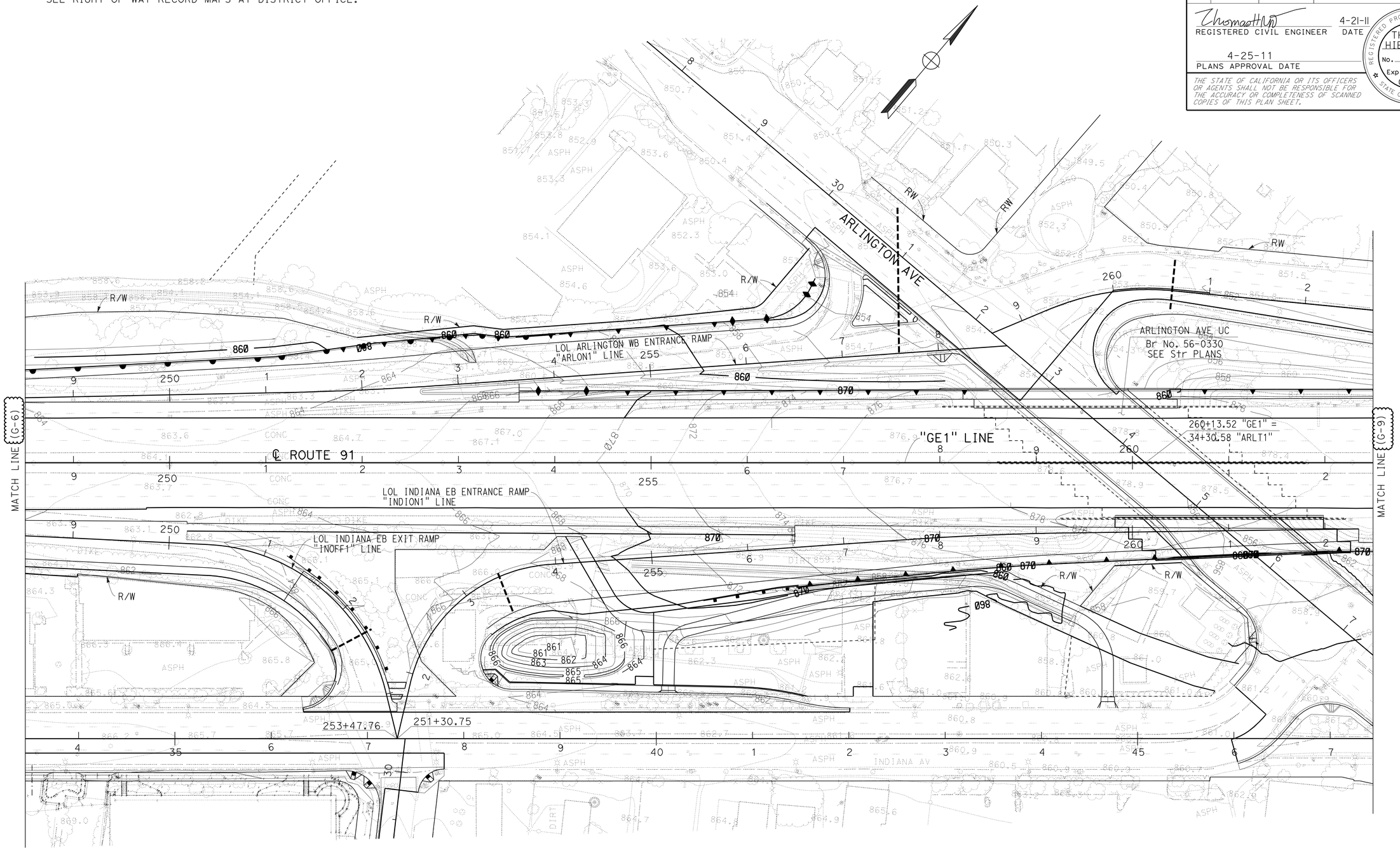

CONTOUR GRADING

SCALE: 1" = 50'

G-7

STATE OF CALIFORNIA - DEPARTMENT OF TRANSPORTATION
Caltrans
DESIGN

FUNCTIONAL SUPERVISOR: MARK PERTILE
CALCULATED-DESIGNED BY: THAI VAN HGUYEN
CHECKED BY: THOMAS HIEN NGO
REVISED BY
DATE REVISED

LAST REVISION 04-21-11
DATE PLOTTED => 29-APR-2011
TIME PLOTTED => 17:28

BORDER LAST REVISED 4/11/2008
RELATIVE BORDER SCALE IS IN INCHES 0 1 2 3
USERNAME => trphils
DGN FILE => 844840ha007.dgn
CU 08227
EA 448401

NOTE: FOR COMPLETE RIGHT OF WAY AND ACCURATE ACCESS DATA, SEE RIGHT OF WAY RECORD MAPS AT DISTRICT OFFICE.

Dist	COUNTY	ROUTE	POST MILES TOTAL PROJECT	SHEET No.	TOTAL SHEETS
08	Riv	91	15.6/21.6	207	2028

REGISTERED CIVIL ENGINEER 4-21-11 DATE

4-25-11
PLANS APPROVAL DATE

REGISTERED PROFESSIONAL ENGINEER THOMAS HIEN NGO No. 68383 Exp. 9/30/11 CIVIL STATE OF CALIFORNIA

THE STATE OF CALIFORNIA OR ITS OFFICERS OR AGENTS SHALL NOT BE RESPONSIBLE FOR THE ACCURACY OR COMPLETENESS OF SCANNED COPIES OF THIS PLAN SHEET.

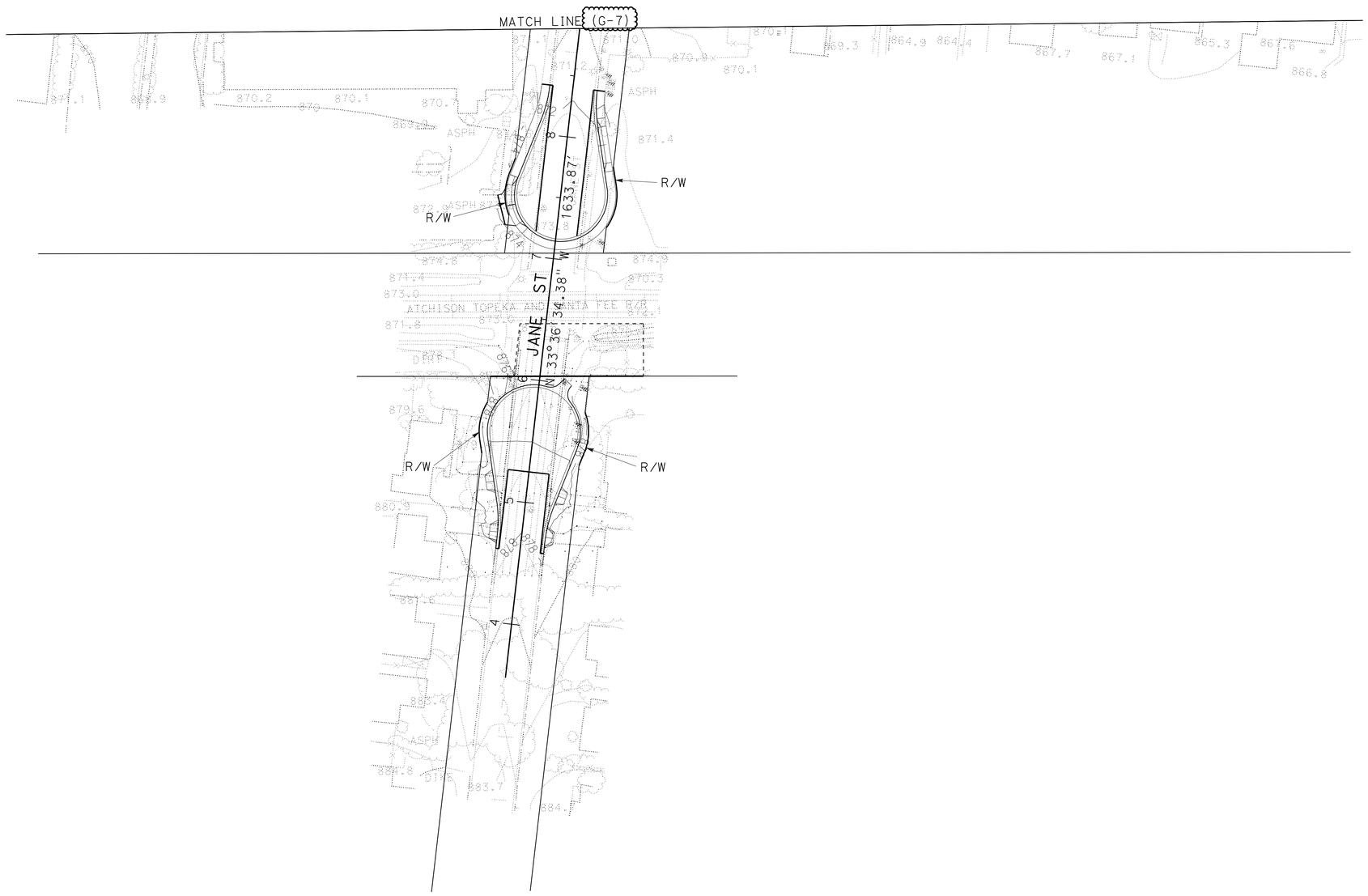

CONTOUR GRADING

SCALE: 1" = 50'

G-8

STATE OF CALIFORNIA - DEPARTMENT OF TRANSPORTATION
Caltrans® **DESIGN**

FUNCTIONAL SUPERVISOR: MARK PERTILE
CALCULATED-DESIGNED BY: THAI VAN HGUYEN
CHECKED BY: THOMAS HIEN NGO
REVISED BY
DATE REVISED

LAST REVISION 04-21-11
DATE PLOTTED => 29-APR-2011
TIME PLOTTED => 17:28

Dist	COUNTY	ROUTE	POST MILES TOTAL PROJECT	SHEET No.	TOTAL SHEETS
08	Riv	91	15.6/21.6	208	2028

REGISTERED CIVIL ENGINEER 4-21-11 DATE

4-25-11
PLANS APPROVAL DATE

REGISTERED PROFESSIONAL ENGINEER THOMAS HIEN NGO No. 68383 Exp. 9/30/11 CIVIL STATE OF CALIFORNIA

THE STATE OF CALIFORNIA OR ITS OFFICERS OR AGENTS SHALL NOT BE RESPONSIBLE FOR THE ACCURACY OR COMPLETENESS OF SCANNED COPIES OF THIS PLAN SHEET.

NOTE: FOR COMPLETE RIGHT OF WAY AND ACCURATE ACCESS DATA, SEE RIGHT OF WAY RECORD MAPS AT DISTRICT OFFICE.

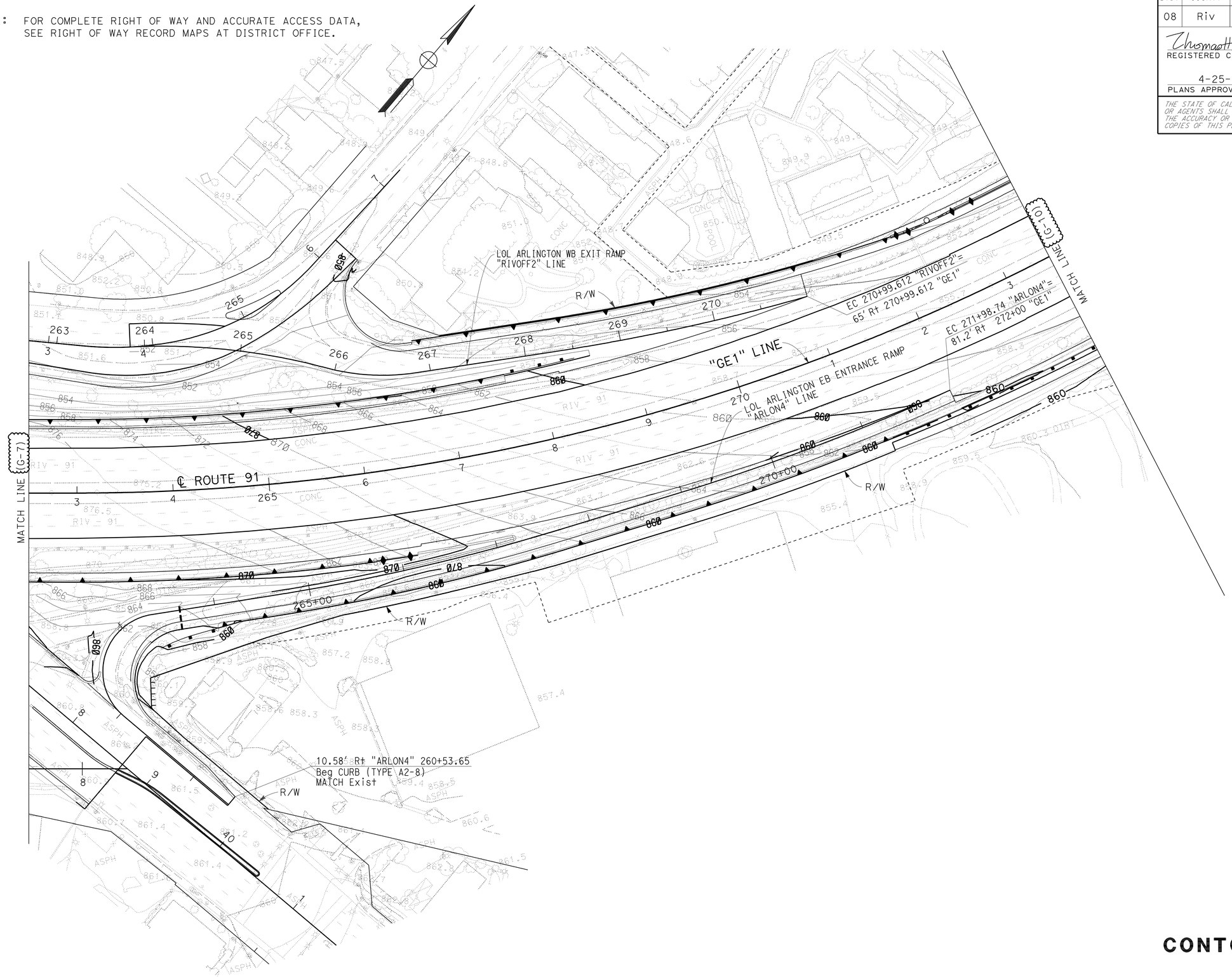

CONTOUR GRADING

SCALE: 1" = 50'

G-9

STATE OF CALIFORNIA - DEPARTMENT OF TRANSPORTATION
Caltrans
DESIGN

FUNCTIONAL SUPERVISOR: MARK PERTILE
CALCULATED-DESIGNED BY: THAI VAN HGUYEN
CHECKED BY: THOMAS HIEN NGO
REVISED BY
DATE REVISED

LAST REVISION 04-21-11
DATE PLOTTED => 29-APR-2011
TIME PLOTTED => 17:28

Dist	COUNTY	ROUTE	POST MILES TOTAL PROJECT	SHEET No.	TOTAL SHEETS
08	Riv	91	15.6/21.6	209	2028

REGISTERED CIVIL ENGINEER 12-1-10 DATE

4-25-11
PLANS APPROVAL DATE

REGISTERED PROFESSIONAL ENGINEER CUONG LE TRAN No. C60436 Exp 6/30/12 CIVIL STATE OF CALIFORNIA

THE STATE OF CALIFORNIA OR ITS OFFICERS OR AGENTS SHALL NOT BE RESPONSIBLE FOR THE ACCURACY OR COMPLETENESS OF SCANNED COPIES OF THIS PLAN SHEET.

NOTE:

FOR ACCURATE RIGHT OF WAY AND ACCESS DATA, CONTACT RIGHT OF WAY ENGINEERING AT THE DISTRICT OFFICE.

CURVE DATA

No.	R	Δ	T	L
1	207.50′	4°51′46"	8.81′	17.61′
2	192.50′	6°22′30"	10.72′	21.42′
3	207.50′	3°21′44"	6.09′	12.18′
4	192.51′	6°37′50"	11.15′	22.28′
5	25.00′	72°28′55"	18.32′	31.63′
6	1374.07′	12°3′57"	145.22′	289.36′

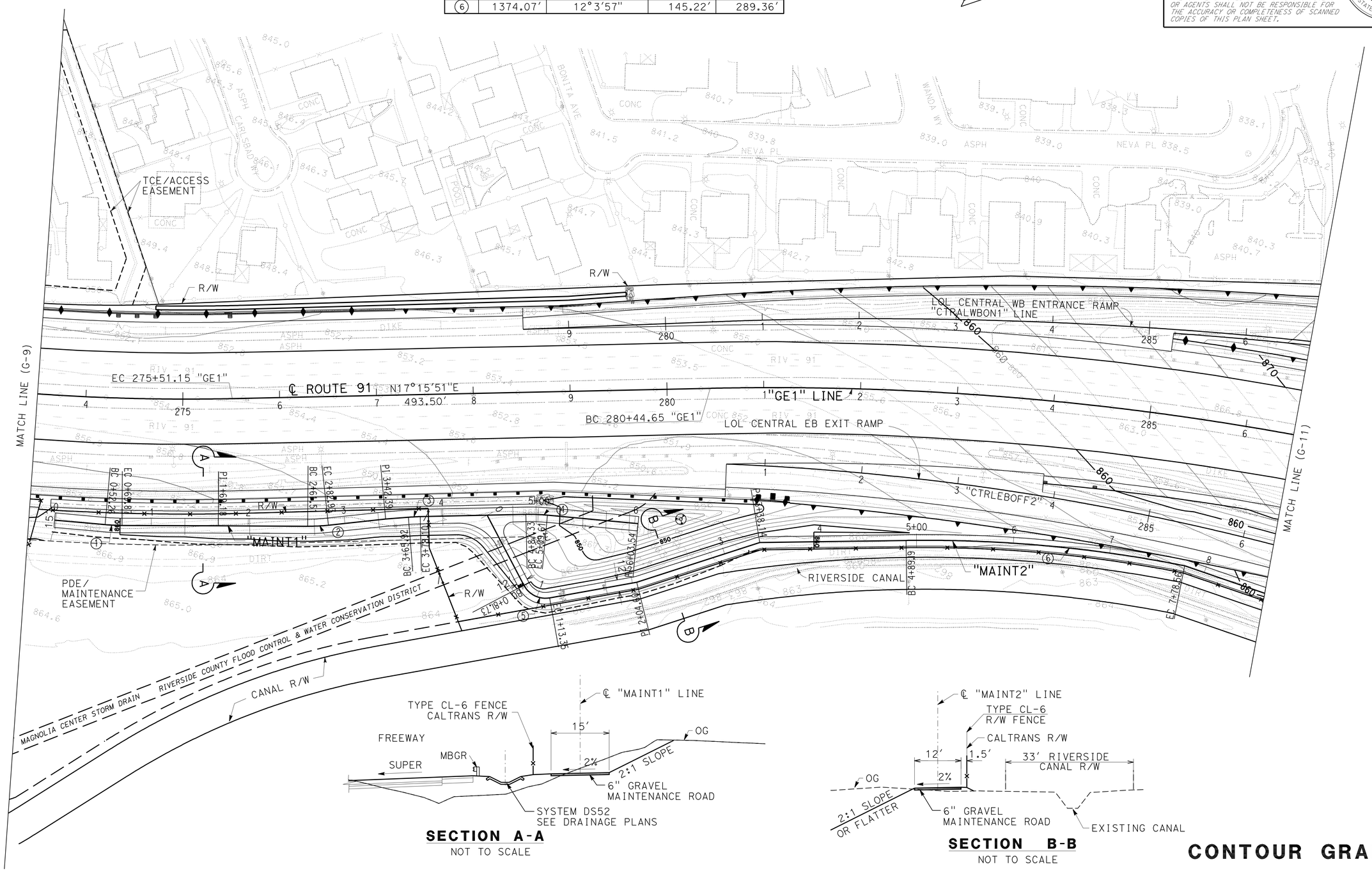

SECTION A-A
NOT TO SCALE

SECTION B-B
NOT TO SCALE

THIS PLAN ACCURATE FOR CONTOUR GRADING WORK ONLY.

CONTOUR GRADING

SCALE: 1" = 50′ **G-10**

STATE OF CALIFORNIA - DEPARTMENT OF TRANSPORTATION
Caltrans® **DESIGN**

FUNCTIONAL SUPERVISOR: MARK PERTILE
CALCULATED-DESIGNED BY: CUONG LE TRAN
CHECKED BY: ANNABELL WANG
REVISED BY / DATE REVISED

LAST REVISION DATE PLOTTED => 29-APR-2011
12-01-10 TIME PLOTTED => 17:29

Dist	COUNTY	ROUTE	POST MILES TOTAL PROJECT	SHEET No.	TOTAL SHEETS
08	Riv	91	15.6/21.6	210	2028

REGISTERED CIVIL ENGINEER 12-1-10 DATE

4-25-11
PLANS APPROVAL DATE

REGISTERED PROFESSIONAL ENGINEER CUONG LE TRAN No. C60436 Exp 6/30/12 CIVIL STATE OF CALIFORNIA

THE STATE OF CALIFORNIA OR ITS OFFICERS OR AGENTS SHALL NOT BE RESPONSIBLE FOR THE ACCURACY OR COMPLETENESS OF SCANNED COPIES OF THIS PLAN SHEET.

CURVE DATA

No.	R	Δ	T	L
7	50.00′	10°17′53"	4.51′	8.99′
8	25.00′	37°51′48"	8.57′	16.52′

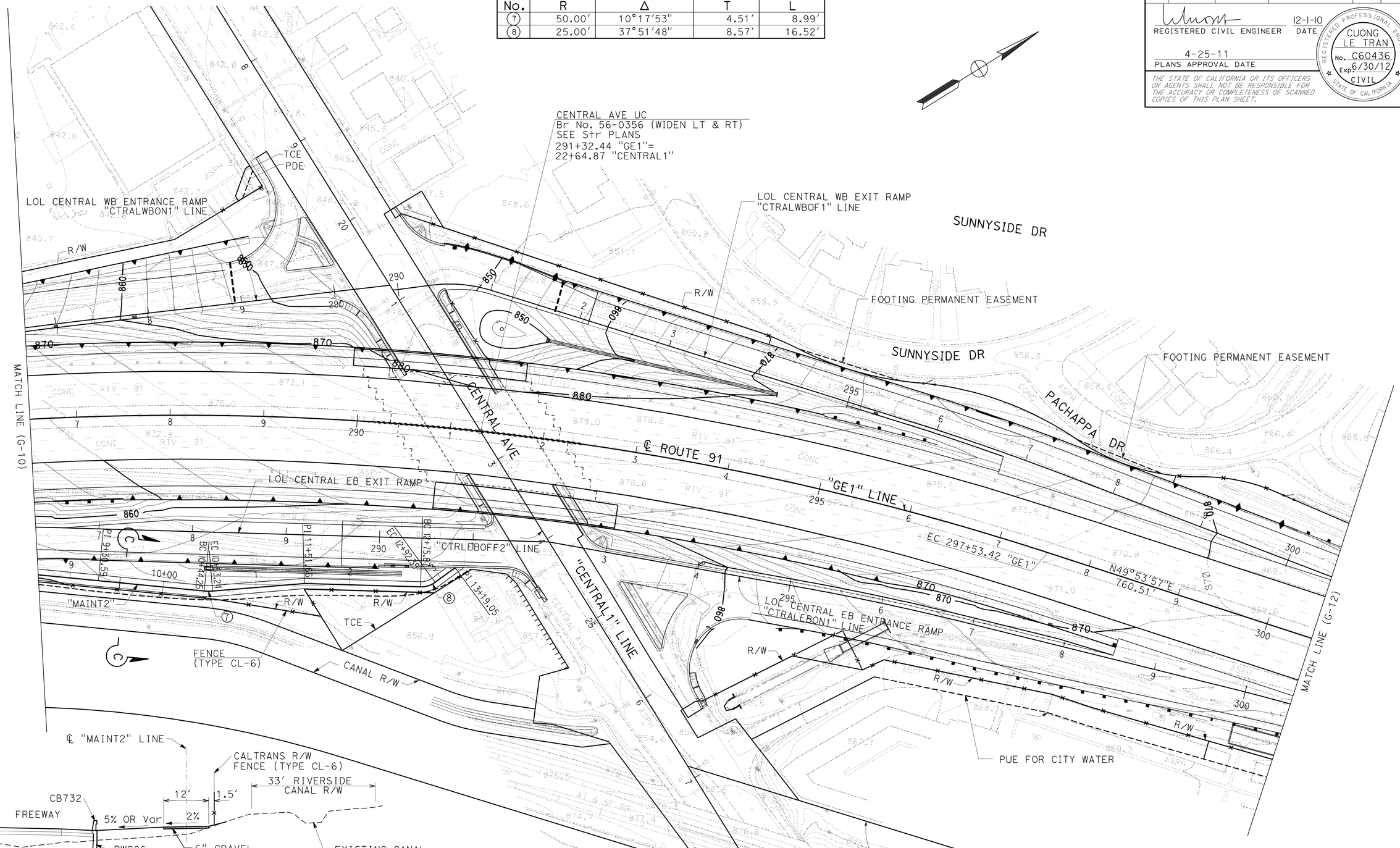

SECTION C-C
NOT TO SCALE

NOTE:

FOR ACCURATE RIGHT OF WAY AND ACCESS DATA, CONTACT RIGHT OF WAY ENGINEERING AT THE DISTRICT OFFICE.

THIS PLAN ACCURATE FOR CONTOUR GRADING WORK ONLY.

CONTOUR GRADING

SCALE: 1" = 50′ **G-11**

STATE OF CALIFORNIA - DEPARTMENT OF TRANSPORTATION
Caltrans®
DESIGN

FUNCTIONAL SUPERVISOR: MARK PERTILE
CALCULATED-DESIGNED BY: CUONG LE TRAN
CHECKED BY: ANNABELL WANG
REVISED BY
DATE REVISED

LAST REVISION 12-01-10
DATE PLOTTED => 29-APR-2011
TIME PLOTTED => 17:29

NOTE:

FOR ACCURATE RIGHT OF WAY AND ACCESS DATA,
CONTACT RIGHT OF WAY ENGINEERING AT THE DISTRICT OFFICE.

Dist	COUNTY	ROUTE	POST MILES TOTAL PROJECT	SHEET No.	TOTAL SHEETS
08	Riv	91	15.6/21.6	211	2028

REGISTERED CIVIL ENGINEER 12-1-10 DATE

4-25-11
PLANS APPROVAL DATE

REGISTERED PROFESSIONAL ENGINEER
CUONG LE TRAN
No. C60436
Exp 6/30/12
CIVIL
STATE OF CALIFORNIA

THE STATE OF CALIFORNIA OR ITS OFFICERS OR AGENTS SHALL NOT BE RESPONSIBLE FOR THE ACCURACY OR COMPLETENESS OF SCANNED COPIES OF THIS PLAN SHEET.

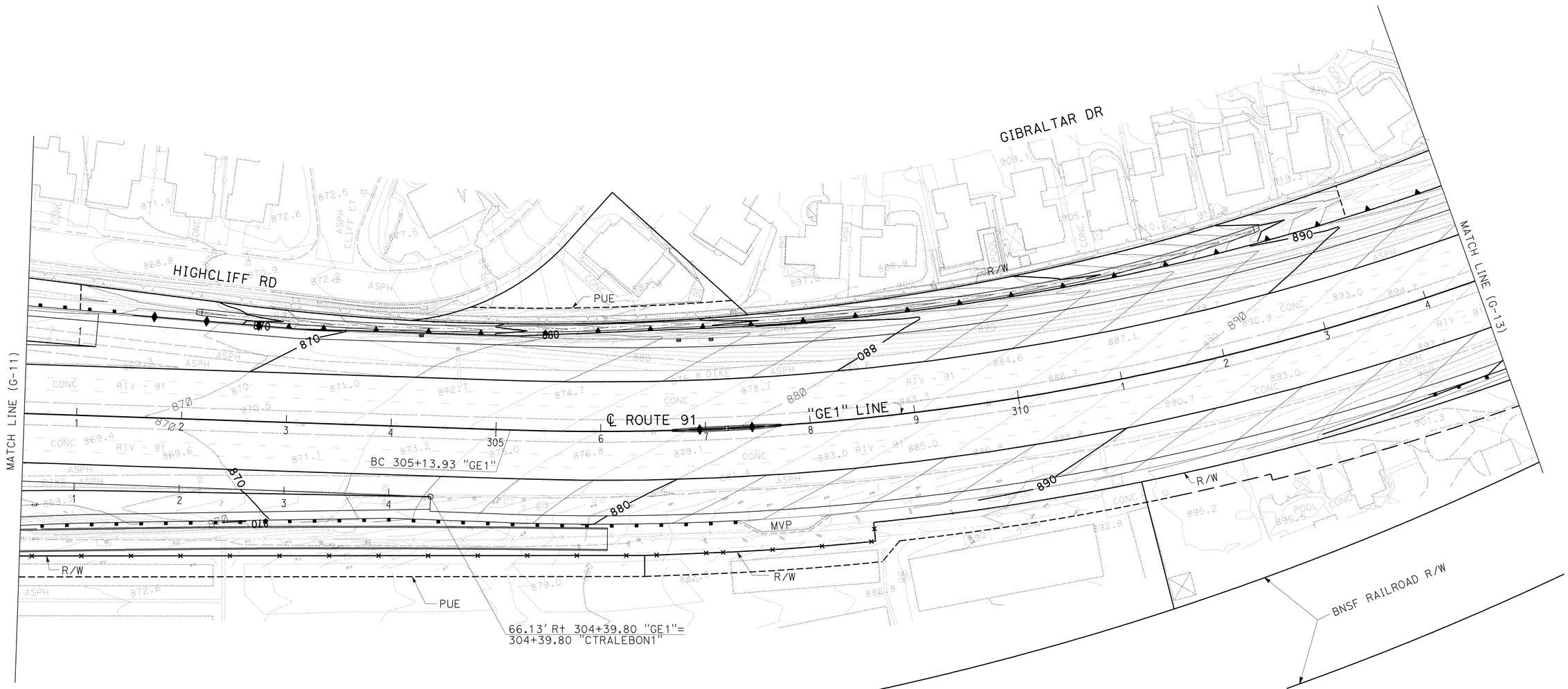

THIS PLAN ACCURATE FOR CONTOUR GRADING WORK ONLY.

CONTOUR GRADING

SCALE: 1" = 50' **G-12**

STATE OF CALIFORNIA - DEPARTMENT OF TRANSPORTATION
Caltrans® DESIGN

FUNCTIONAL SUPERVISOR: MARK PERTILE

CALCULATED-DESIGNED BY: CUONG LE TRAN
CHECKED BY: ANNABELL WANG

REVISED BY
DATE REVISED

LAST REVISION 02-00-00
DATE PLOTTED => 29-APR-2011
TIME PLOTTED => 17:29

Dist	COUNTY	ROUTE	POST MILES TOTAL PROJECT	SHEET No.	TOTAL SHEETS
08	Riv	91	15.6/21.6	212	2028

REGISTERED CIVIL ENGINEER 12-1-10 DATE

4-25-11
PLANS APPROVAL DATE

REGISTERED PROFESSIONAL ENGINEER CUONG LE TRAN No. C60436 Exp 6/30/12 CIVIL STATE OF CALIFORNIA

THE STATE OF CALIFORNIA OR ITS OFFICERS OR AGENTS SHALL NOT BE RESPONSIBLE FOR THE ACCURACY OR COMPLETENESS OF SCANNED COPIES OF THIS PLAN SHEET.

NOTE:

FOR ACCURATE RIGHT OF WAY AND ACCESS DATA,
CONTACT RIGHT OF WAY ENGINEERING AT THE DISTRICT OFFICE.

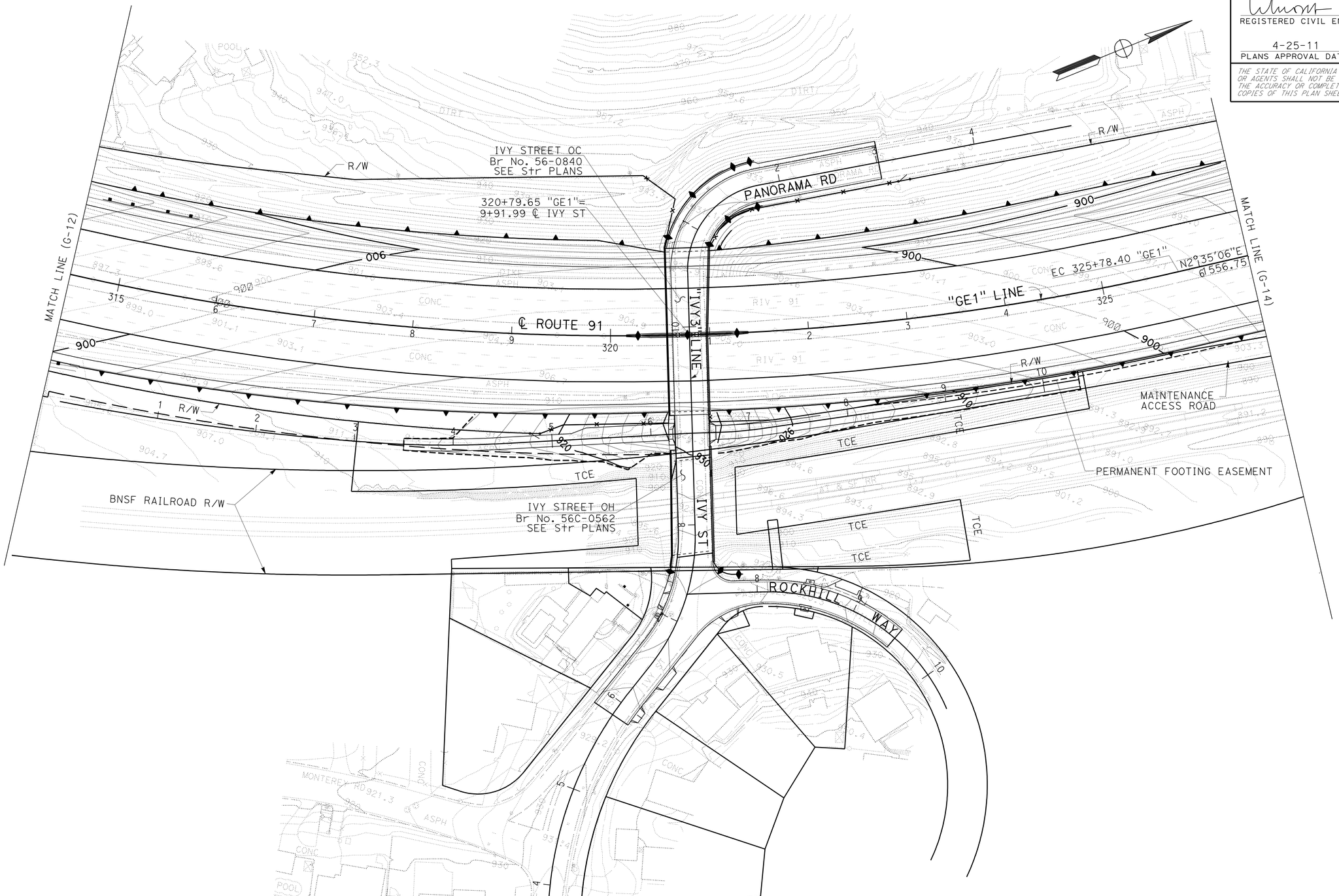

THIS PLAN ACCURATE FOR CONTOUR GRADING WORK ONLY.

CONTOUR GRADING

SCALE: 1" = 50′ **G-13**

STATE OF CALIFORNIA - DEPARTMENT OF TRANSPORTATION
Caltrans® DESIGN

FUNCTIONAL SUPERVISOR: MARK PERTILE
CALCULATED-DESIGNED BY: CUONG LE TRAN
CHECKED BY: ANNABELL WANG
REVISED BY
DATE REVISED

LAST REVISION 12-01-10 | DATE PLOTTED => 29-APR-2011 | TIME PLOTTED => 17:29

BORDER LAST REVISED 4/11/2008 | RELATIVE BORDER SCALE IS IN INCHES 0 1 2 3 | USERNAME => trphils | DGN FILE => 844840ha013.dgn | CU 08227 | EA 448401

Dist	COUNTY	ROUTE	POST MILES TOTAL PROJECT	SHEET No.	TOTAL SHEETS
08	Riv	91	15.6/21.6	213	2028

REGISTERED CIVIL ENGINEER 12-1-10 DATE

4-25-11
PLANS APPROVAL DATE

REGISTERED PROFESSIONAL ENGINEER CUONG LE TRAN No. C60436 Exp 6/30/12 CIVIL STATE OF CALIFORNIA

THE STATE OF CALIFORNIA OR ITS OFFICERS OR AGENTS SHALL NOT BE RESPONSIBLE FOR THE ACCURACY OR COMPLETENESS OF SCANNED COPIES OF THIS PLAN SHEET.

NOTE:

FOR ACCURATE RIGHT OF WAY AND ACCESS DATA,
CONTACT RIGHT OF WAY ENGINEERING AT THE DISTRICT OFFICE.

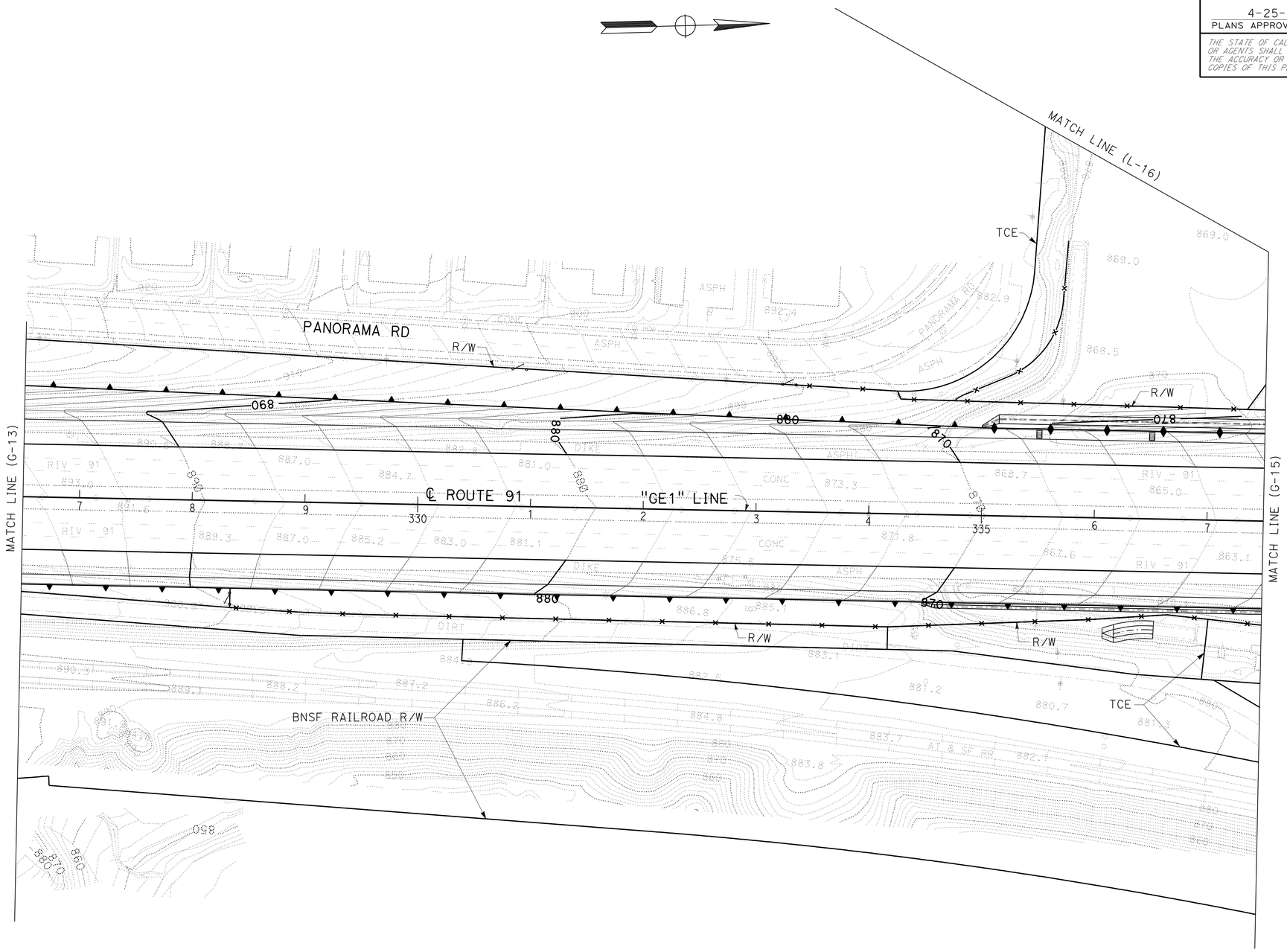

THIS PLAN ACCURATE FOR CONTOUR GRADING WORK ONLY.

CONTOUR GRADING

SCALE: 1" = 50' **G-14**

STATE OF CALIFORNIA - DEPARTMENT OF TRANSPORTATION
Caltrans® **DESIGN**

FUNCTIONAL SUPERVISOR: MARK PERTILE
CALCULATED-DESIGNED BY: CUONG LE TRAN
CHECKED BY: ANNABELL WANG
REVISED BY
DATE REVISED

LAST REVISION 12-01-10
DATE PLOTTED => 29-APR-2011
TIME PLOTTED => 17:29

Dist	COUNTY	ROUTE	POST MILES TOTAL PROJECT	SHEET No.	TOTAL SHEETS
08	Riv	91	15.6/21.6	214	2028

REGISTERED CIVIL ENGINEER 4-11-10 DATE

4-25-11
PLANS APPROVAL DATE

REGISTERED PROFESSIONAL ENGINEER CUONG LE TRAN No. C60436 Exp 6/30/12 CIVIL STATE OF CALIFORNIA

THE STATE OF CALIFORNIA OR ITS OFFICERS OR AGENTS SHALL NOT BE RESPONSIBLE FOR THE ACCURACY OR COMPLETENESS OF SCANNED COPIES OF THIS PLAN SHEET.

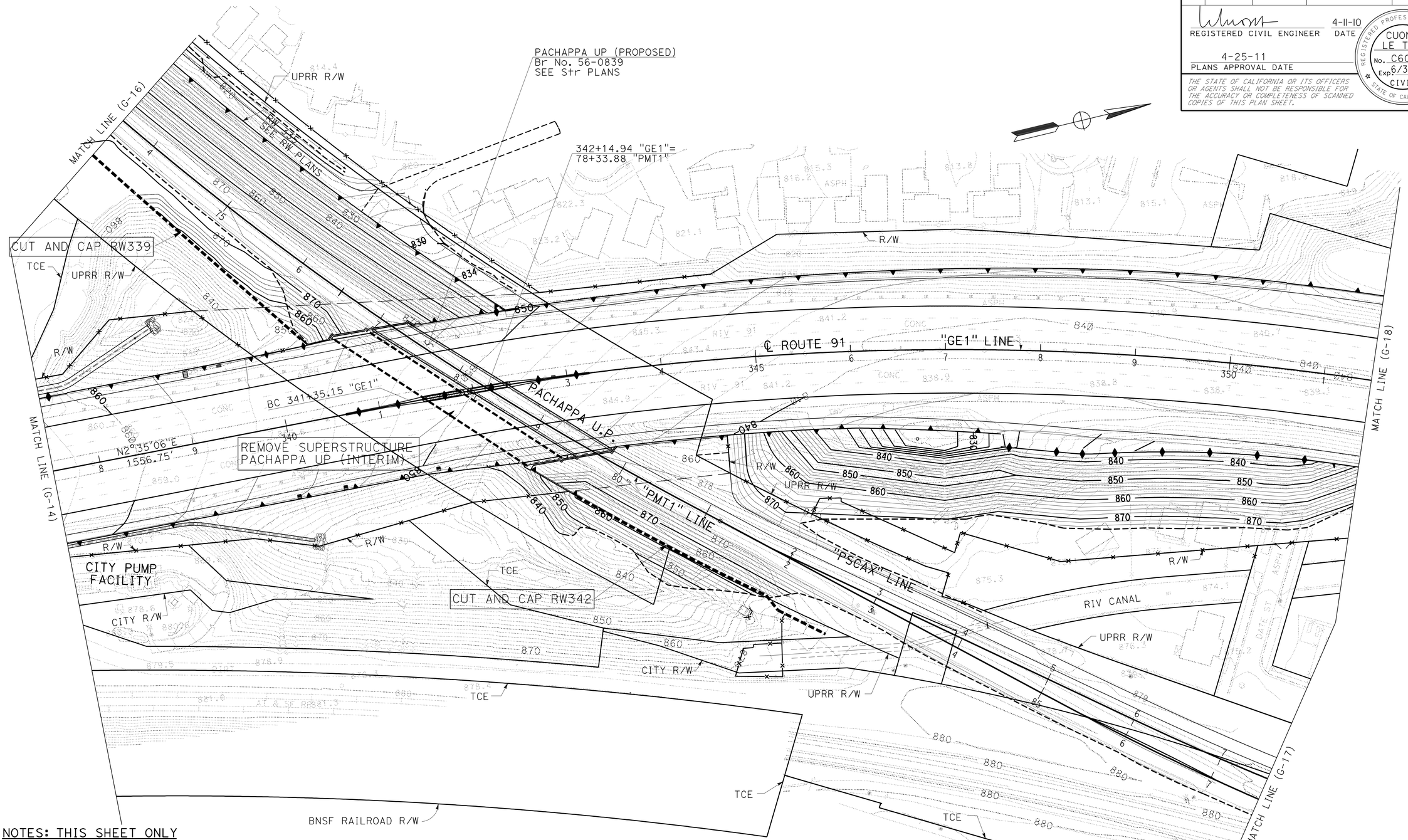

NOTES: THIS SHEET ONLY

1. FOR ACCURATE RIGHT OF WAY AND ACCESS DATA, CONTACT RIGHT OF WAY ENGINEERING AT THE DISTRICT OFFICE
2. FOR INTERIM CONTOUR GRADING ALONG RAILROAD TRACKS, SEE SHEET C-95.
3. CONTOUR GRADING ALONG RAILROAD TRACKS IS TO THE SUBGRADE LEVEL ONLY.
4. BALLAST AND TRACK WORK TO BE DONE BY OTHERS.

THIS PLAN ACCURATE FOR CONTOUR GRADING WORK ONLY.

CONTOUR GRADING

SCALE: 1" = 50′ **G-15**

STATE OF CALIFORNIA - DEPARTMENT OF TRANSPORTATION
Caltrans®
DESIGN

FUNCTIONAL SUPERVISOR: MARK PERTILE
CALCULATED-DESIGNED BY: CUONG LE TRAN
CHECKED BY: ANNABELL WANG
REVISED BY
DATE REVISED

LAST REVISION 04-11-11
DATE PLOTTED => 29-APR-2011
TIME PLOTTED => 17:29

Dist	COUNTY	ROUTE	POST MILES TOTAL PROJECT	SHEET No.	TOTAL SHEETS
08	Riv	91	15.6/21.6	215	2028

REGISTERED CIVIL ENGINEER 4-11-10 DATE

4-25-11
PLANS APPROVAL DATE

REGISTERED PROFESSIONAL ENGINEER CUONG LE TRAN No. C60436 Exp 6/30/12 CIVIL STATE OF CALIFORNIA

THE STATE OF CALIFORNIA OR ITS OFFICERS OR AGENTS SHALL NOT BE RESPONSIBLE FOR THE ACCURACY OR COMPLETENESS OF SCANNED COPIES OF THIS PLAN SHEET.

NOTES: THIS SHEET ONLY

1. FOR ACCURATE RIGHT OF WAY AND ACCESS DATA, CONTACT RIGHT OF WAY ENGINEERING AT THE DISTRICT OFFICE
2. FOR INTERIM CONTOUR GRADING ALONG RAILROAD TRACKS, SEE SHEET C-96.
3. CONTOUR GRADING ALONG RAILROAD TRACKS IS TO THE SUBGRADE LEVEL ONLY.
4. BALLAST AND TRACK WORK TO BE DONE BY OTHERS.

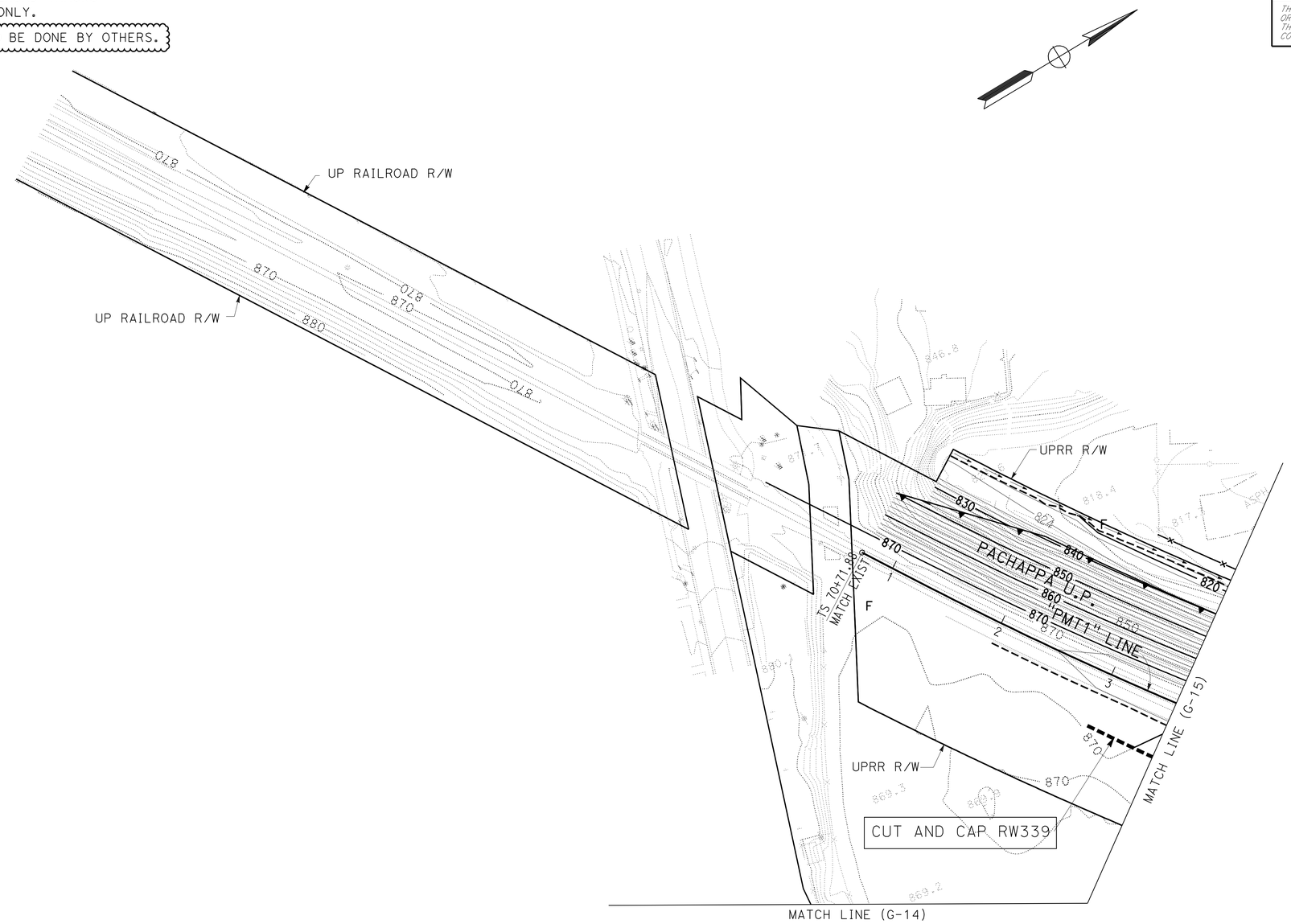

THIS PLAN ACCURATE FOR CONTOUR GRADING WORK ONLY.

CONTOUR GRADING

SCALE: 1" = 50'

G-16

STATE OF CALIFORNIA - DEPARTMENT OF TRANSPORTATION
Caltrans® DESIGN

FUNCTIONAL SUPERVISOR: MARK PERTILE

CALCULATED-DESIGNED BY: CUONG LE TRAN
CHECKED BY: ANNABELL WANG

REVISED BY
DATE REVISED

LAST REVISION 04-11-11
DATE PLOTTED => 29-APR-2011
TIME PLOTTED => 17:30

Dist	COUNTY	ROUTE	POST MILES TOTAL PROJECT	SHEET No.	TOTAL SHEETS
08	Riv	91	15.6/21.6	216	2028

REGISTERED CIVIL ENGINEER 4-11-10 DATE

4-25-11
PLANS APPROVAL DATE

REGISTERED PROFESSIONAL ENGINEER CUONG LE TRAN No. C60436 Exp 6/30/12 CIVIL STATE OF CALIFORNIA

THE STATE OF CALIFORNIA OR ITS OFFICERS OR AGENTS SHALL NOT BE RESPONSIBLE FOR THE ACCURACY OR COMPLETENESS OF SCANNED COPIES OF THIS PLAN SHEET.

NOTES: THIS SHEET ONLY

1. FOR ACCURATE RIGHT OF WAY AND ACCESS DATA, CONTACT RIGHT OF WAY ENGINEERING AT THE DISTRICT OFFICE
2. FOR INTERIM CONTOUR GRADING ALONG RAILROAD TRACKS, SEE SHEET C-97.
3. CONTOUR GRADING ALONG RAILROAD TRACKS IS TO THE SUBGRADE LEVEL ONLY.
4. BALLAST AND TRACK WORK TO BE DONE BY OTHERS.

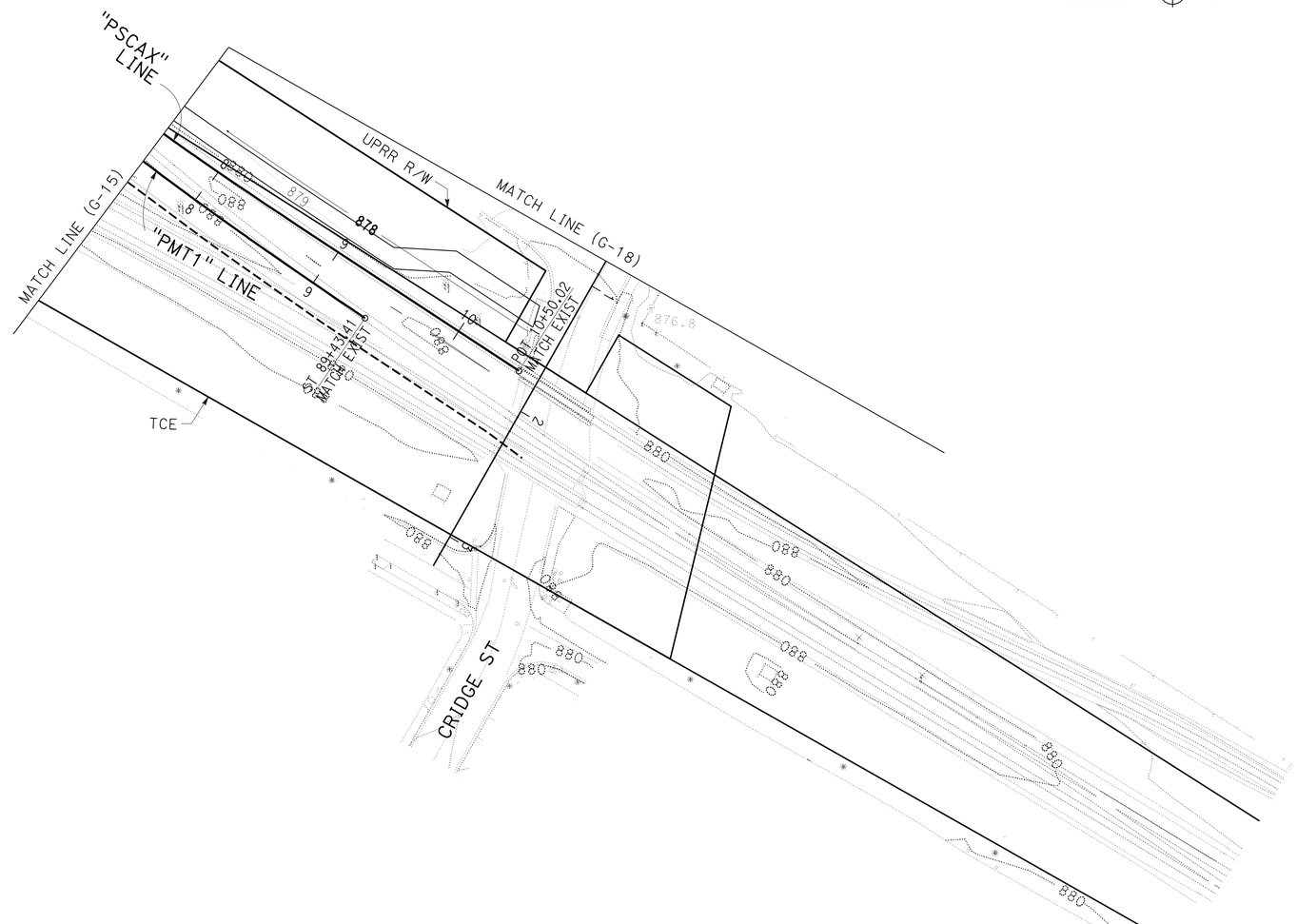

THIS PLAN ACCURATE FOR CONTOUR GRADING WORK ONLY.

CONTOUR GRADING

SCALE: 1" = 50′ **G-17**

STATE OF CALIFORNIA - DEPARTMENT OF TRANSPORTATION
Caltrans DESIGN

FUNCTIONAL SUPERVISOR: MARK PERTILE
CALCULATED-DESIGNED BY: CUONG LE TRAN
CHECKED BY: ANNABELL WANG
REVISED BY
DATE REVISED

LAST REVISION 04-11-11
DATE PLOTTED => 29-APR-2011
TIME PLOTTED => 17:30

Dist	COUNTY	ROUTE	POST MILES TOTAL PROJECT	SHEET No.	TOTAL SHEETS
08	Riv	91	15.6/21.6	217	2028

REGISTERED CIVIL ENGINEER 12-1-10 DATE

4-25-11
PLANS APPROVAL DATE

REGISTERED PROFESSIONAL ENGINEER CUONG LE TRAN No. C60436 Exp 6/30/12 CIVIL STATE OF CALIFORNIA

THE STATE OF CALIFORNIA OR ITS OFFICERS OR AGENTS SHALL NOT BE RESPONSIBLE FOR THE ACCURACY OR COMPLETENESS OF SCANNED COPIES OF THIS PLAN SHEET.

NOTE:

FOR ACCURATE RIGHT OF WAY AND ACCESS DATA,
CONTACT RIGHT OF WAY ENGINEERING AT THE DISTRICT OFFICE.

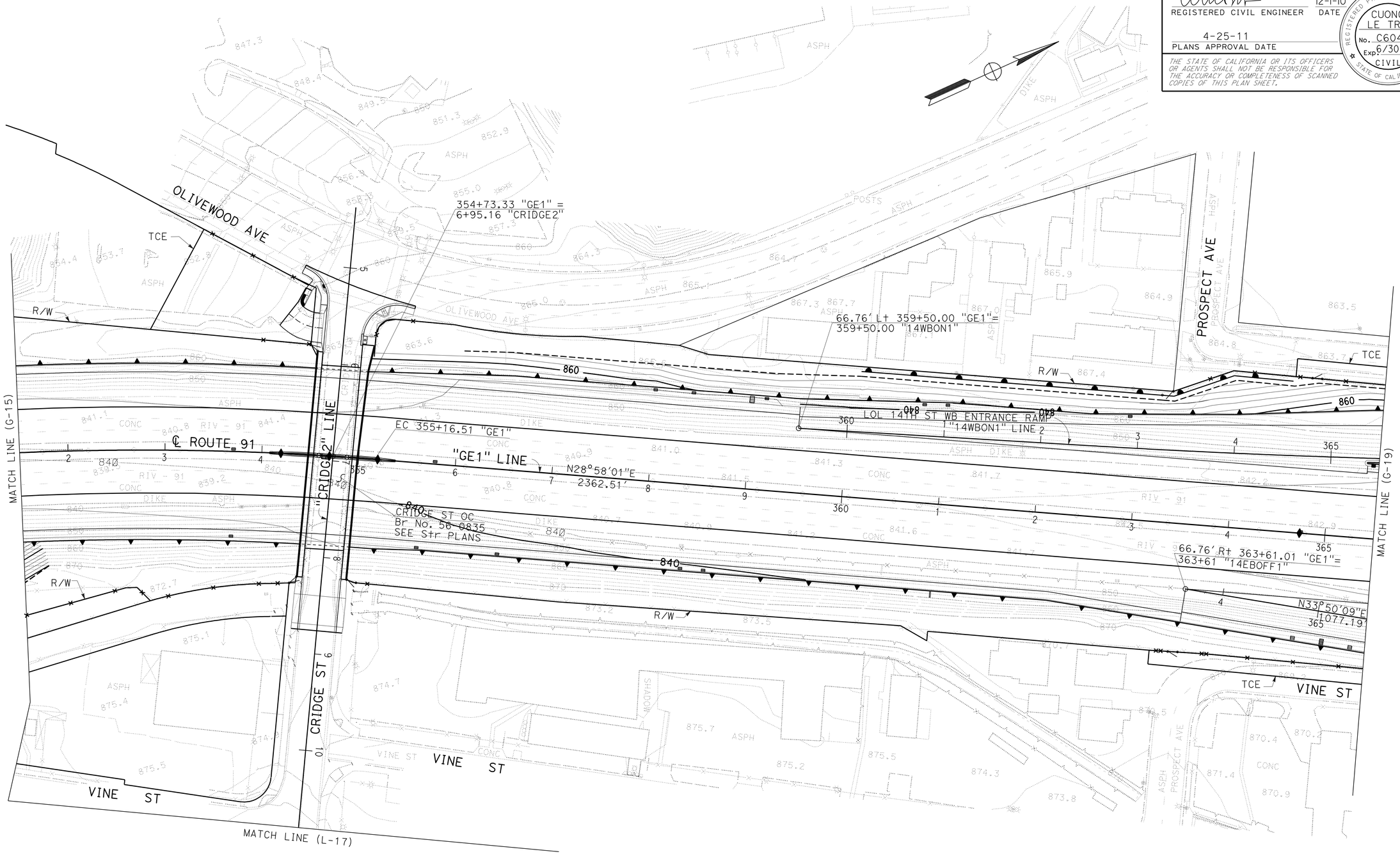

CONTOUR GRADING

SCALE: 1" = 50'

G-18

THIS PLAN ACCURATE FOR CONTOUR GRADING WORK ONLY.

STATE OF CALIFORNIA - DEPARTMENT OF TRANSPORTATION
Caltrans® DESIGN

FUNCTIONAL SUPERVISOR: MARK PERTILE
CALCULATED-DESIGNED BY: CUONG LE TRAN
CHECKED BY: ANNABELL WANG
REVISED BY
DATE REVISED

LAST REVISION 12-01-10
DATE PLOTTED => 29-APR-2011
TIME PLOTTED => 17:30

Dist	COUNTY	ROUTE	POST MILES TOTAL PROJECT	SHEET No.	TOTAL SHEETS
08	Riv	91	15.6/21.6	218	2028

REGISTERED CIVIL ENGINEER 12-1-10 DATE

4-25-11
PLANS APPROVAL DATE

REGISTERED PROFESSIONAL ENGINEER CUONG LE TRAN No. C60436 Exp 6/30/12 CIVIL STATE OF CALIFORNIA

THE STATE OF CALIFORNIA OR ITS OFFICERS OR AGENTS SHALL NOT BE RESPONSIBLE FOR THE ACCURACY OR COMPLETENESS OF SCANNED COPIES OF THIS PLAN SHEET.

NOTE:

FOR ACCURATE RIGHT OF WAY AND ACCESS DATA,
CONTACT RIGHT OF WAY ENGINEERING AT THE DISTRICT OFFICE.

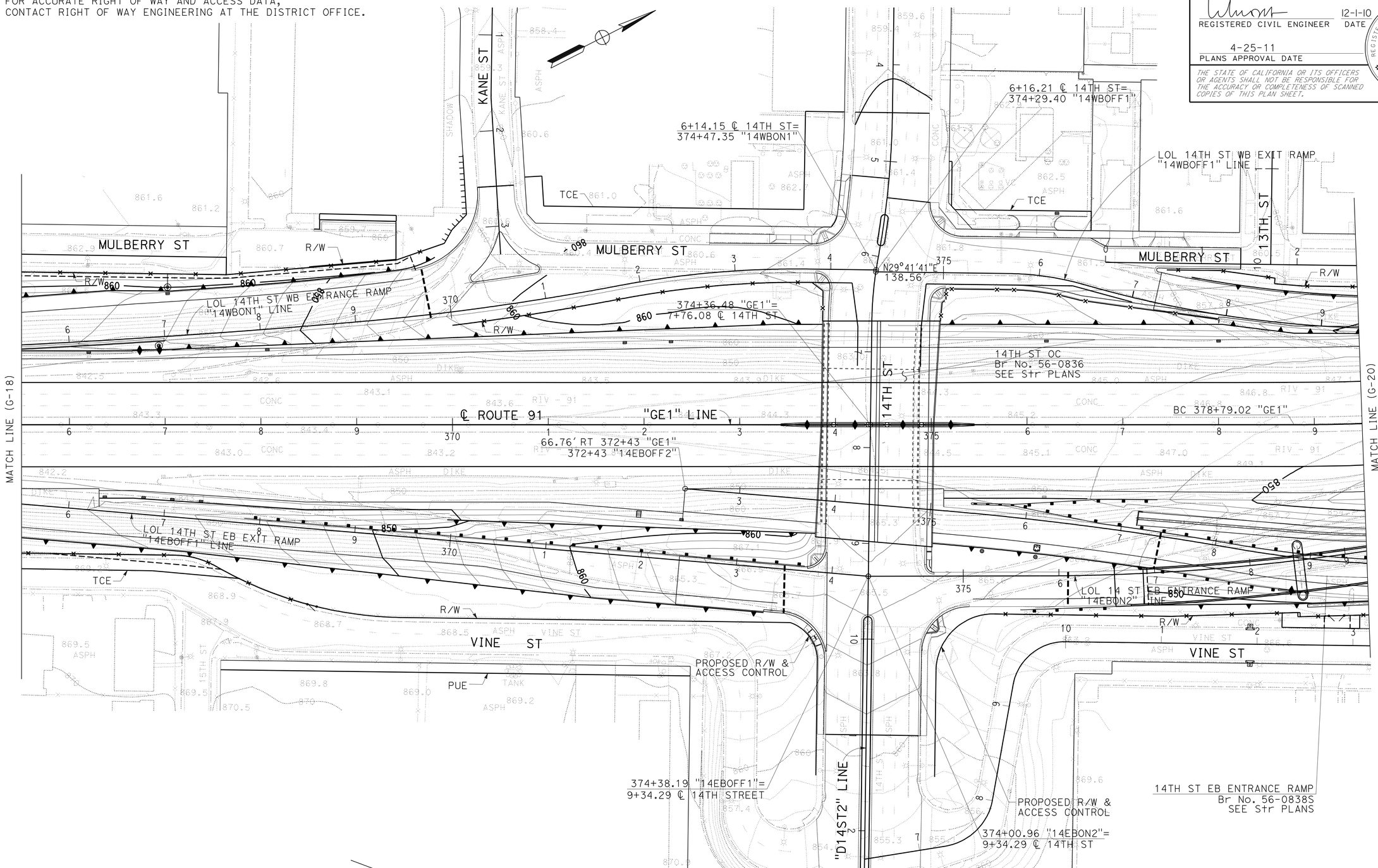

THIS PLAN ACCURATE FOR CONTOUR GRADING WORK ONLY.

CONTOUR GRADING

SCALE: 1" = 50'

G-19

STATE OF CALIFORNIA - DEPARTMENT OF TRANSPORTATION
Caltrans
DESIGN

FUNCTIONAL SUPERVISOR: MARK PERTILE
CALCULATED-DESIGNED BY: ANNABELL WANG
CHECKED BY: CUONG LE TRAN
REVISED BY
DATE REVISED

LAST REVISION 12-01-10 | DATE PLOTTED => 29-APR-2011 | TIME PLOTTED => 17:30

Dist	COUNTY	ROUTE	POST MILES TOTAL PROJECT	SHEET No.	TOTAL SHEETS
08	Riv	91	15.6/21.6	219	2028

REGISTERED CIVIL ENGINEER 12-1-10 DATE

4-25-11
PLANS APPROVAL DATE

REGISTERED PROFESSIONAL ENGINEER CUONG LE TRAN No. C60436 Exp 6/30/12 CIVIL STATE OF CALIFORNIA

THE STATE OF CALIFORNIA OR ITS OFFICERS OR AGENTS SHALL NOT BE RESPONSIBLE FOR THE ACCURACY OR COMPLETENESS OF SCANNED COPIES OF THIS PLAN SHEET.

NOTE:

FOR ACCURATE RIGHT OF WAY AND ACCESS DATA,
CONTACT RIGHT OF WAY ENGINEERING AT THE DISTRICT OFFICE.

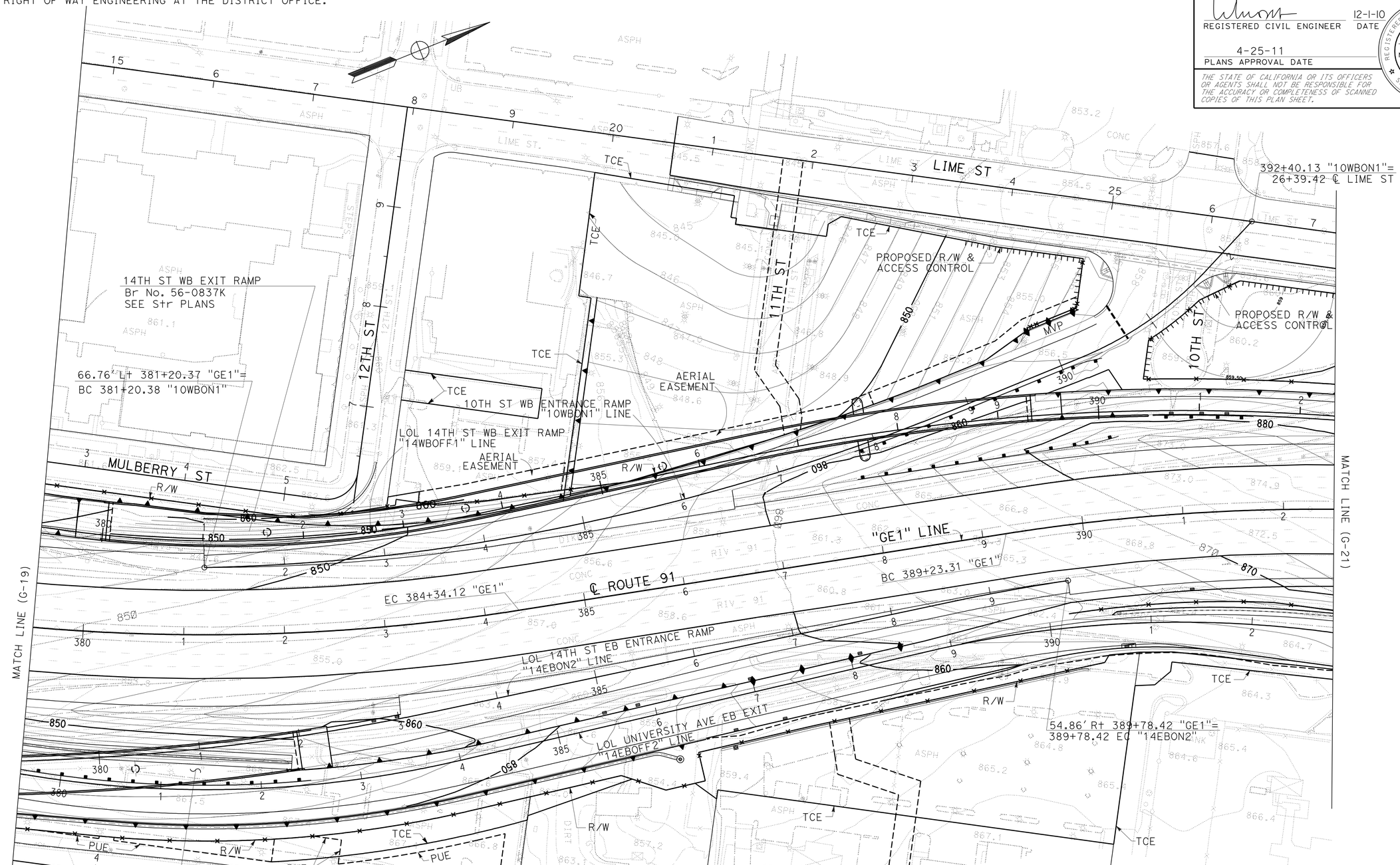

THIS PLAN ACCURATE FOR CONTOUR GRADING WORK ONLY.

CONTOUR GRADING

SCALE: 1" = 50'

G-20

STATE OF CALIFORNIA - DEPARTMENT OF TRANSPORTATION
Caltrans
DESIGN

FUNCTIONAL SUPERVISOR: MARK PERTILE
CALCULATED-DESIGNED BY: CUONG LE TRAN
CHECKED BY: ANNABELL WANG
REVISED BY
DATE REVISED

LAST REVISION 12-01-10 | DATE PLOTTED => 29-APR-2011 | TIME PLOTTED => 17:30

Dist	COUNTY	ROUTE	POST MILES TOTAL PROJECT	SHEET No.	TOTAL SHEETS
08	Riv	91	15.6/21.6	220	2028

REGISTERED CIVIL ENGINEER 12-1-10 DATE

4-25-11
PLANS APPROVAL DATE

REGISTERED PROFESSIONAL ENGINEER CUONG LE TRAN No. C60436 Exp 6/30/12 CIVIL STATE OF CALIFORNIA

THE STATE OF CALIFORNIA OR ITS OFFICERS OR AGENTS SHALL NOT BE RESPONSIBLE FOR THE ACCURACY OR COMPLETENESS OF SCANNED COPIES OF THIS PLAN SHEET.

NOTE:

FOR ACCURATE RIGHT OF WAY AND ACCESS DATA,
CONTACT RIGHT OF WAY ENGINEERING AT THE DISTRICT OFFICE.

NO CONSTRUCTION/WIDENING

RE-STRIPING FROM UNIVERSITY AVE TO 60/215 IC
SEE PD SHEETS

THIS PLAN ACCURATE FOR CONTOUR GRADING WORK ONLY.

CONTOUR GRADING

SCALE: 1" = 50'

G-21

STATE OF CALIFORNIA - DEPARTMENT OF TRANSPORTATION
Caltrans®
DESIGN

FUNCTIONAL SUPERVISOR: MARK PERTILE
CALCULATED-DESIGNED BY: ANNABELL WANG
CHECKED BY: CUONG LE TRAN
REVISED BY
DATE REVISED

LAST REVISION 12-01-10
DATE PLOTTED => 29-APR-2011
TIME PLOTTED => 17:30

Dist	COUNTY	ROUTE	POST MILES TOTAL PROJECT	SHEET No.	TOTAL SHEETS
08	Riv	91	15.6/21.6	221	2028

REGISTERED CIVIL ENGINEER 3-29-10 DATE

4-25-11
PLANS APPROVAL DATE

REGISTERED PROFESSIONAL ENGINEER ALAN R. BISI No. C62808 Exp. 6-30-12 CIVIL STATE OF CALIFORNIA

THE STATE OF CALIFORNIA OR ITS OFFICERS OR AGENTS SHALL NOT BE RESPONSIBLE FOR THE ACCURACY OR COMPLETENESS OF SCANNED COPIES OF THIS PLAN SHEET.

NOTE:

1. FOR COMPLETE RIGHT OF WAY AND ACCURATE ACCESS DATA, SEE RIGHT OF WAY MAPS AT DISTRICT OFFICE.
2. Ω - SEE DRAINAGE DETAIL (DD SHEET).

LEGEND:

DRAINAGE UNIT No.

DRAINAGE SYSTEM No.

Ω: SEE DRAINAGE DETAIL NUMBER INDICATED.

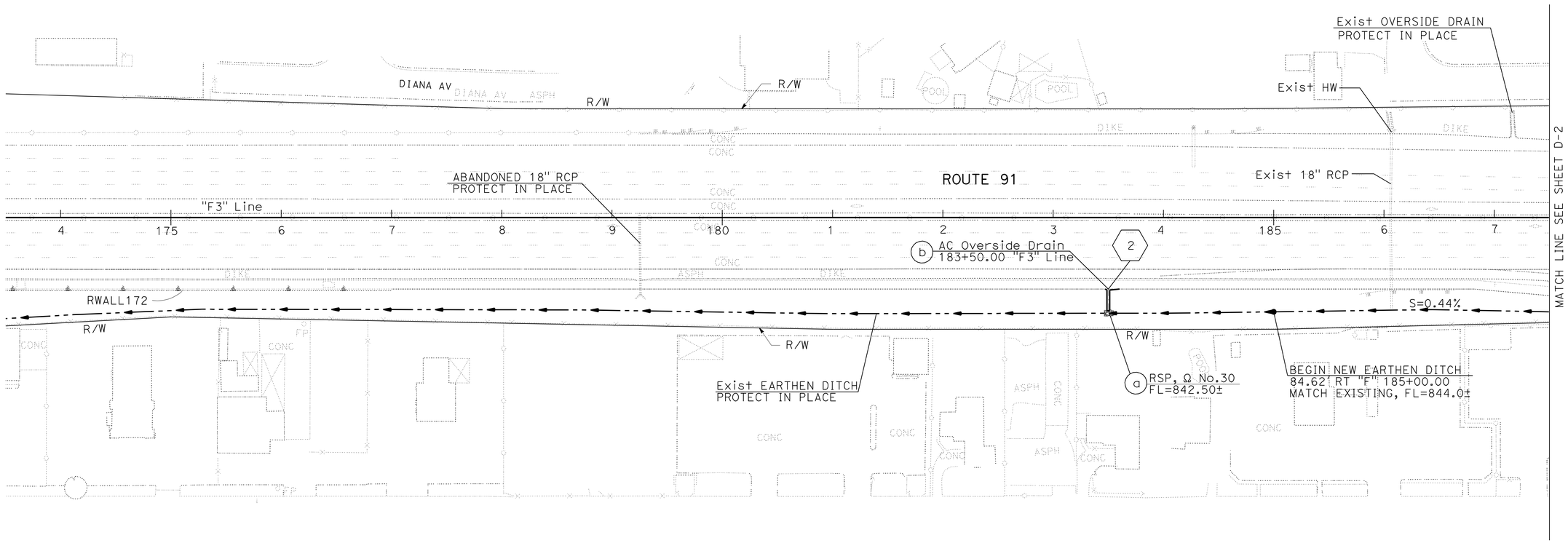

DRAINAGE PLAN

SCALE: 1" = 50'

D-1

THIS PLAN ACCURATE FOR DRAINAGE WORK ONLY.

STATE OF CALIFORNIA - DEPARTMENT OF TRANSPORTATION

Caltrans® DESIGN

FUNCTIONAL SUPERVISOR: MARK PERTILE

CALCULATED-DESIGNED BY: MOHAMMAD ABDRABOH

CHECKED BY: ALAN R. BISI

REVISED BY

DATE REVISED

LAST REVISION 03-29-11

DATE PLOTTED => 29-APR-2011

TIME PLOTTED => 17:30

Dist	COUNTY	ROUTE	POST MILES TOTAL PROJECT	SHEET No.	TOTAL SHEETS
08	Riv	91	15.6/21.6	222	2028

REGISTERED CIVIL ENGINEER 3-29-10 DATE

4-25-11
PLANS APPROVAL DATE

REGISTERED PROFESSIONAL ENGINEER ALAN R. BISI No. C62808 Exp. 6-30-12 CIVIL STATE OF CALIFORNIA

THE STATE OF CALIFORNIA OR ITS OFFICERS OR AGENTS SHALL NOT BE RESPONSIBLE FOR THE ACCURACY OR COMPLETENESS OF SCANNED COPIES OF THIS PLAN SHEET.

NOTE:

FOR ACCURATE RIGHT OF WAY AND ACCESS DATA, CONTACT RIGHT OF WAY ENGINEERING AT THE DISTRICT OFFICE.

Ω - SEE DRAINAGE DETAIL (DD SHEET).

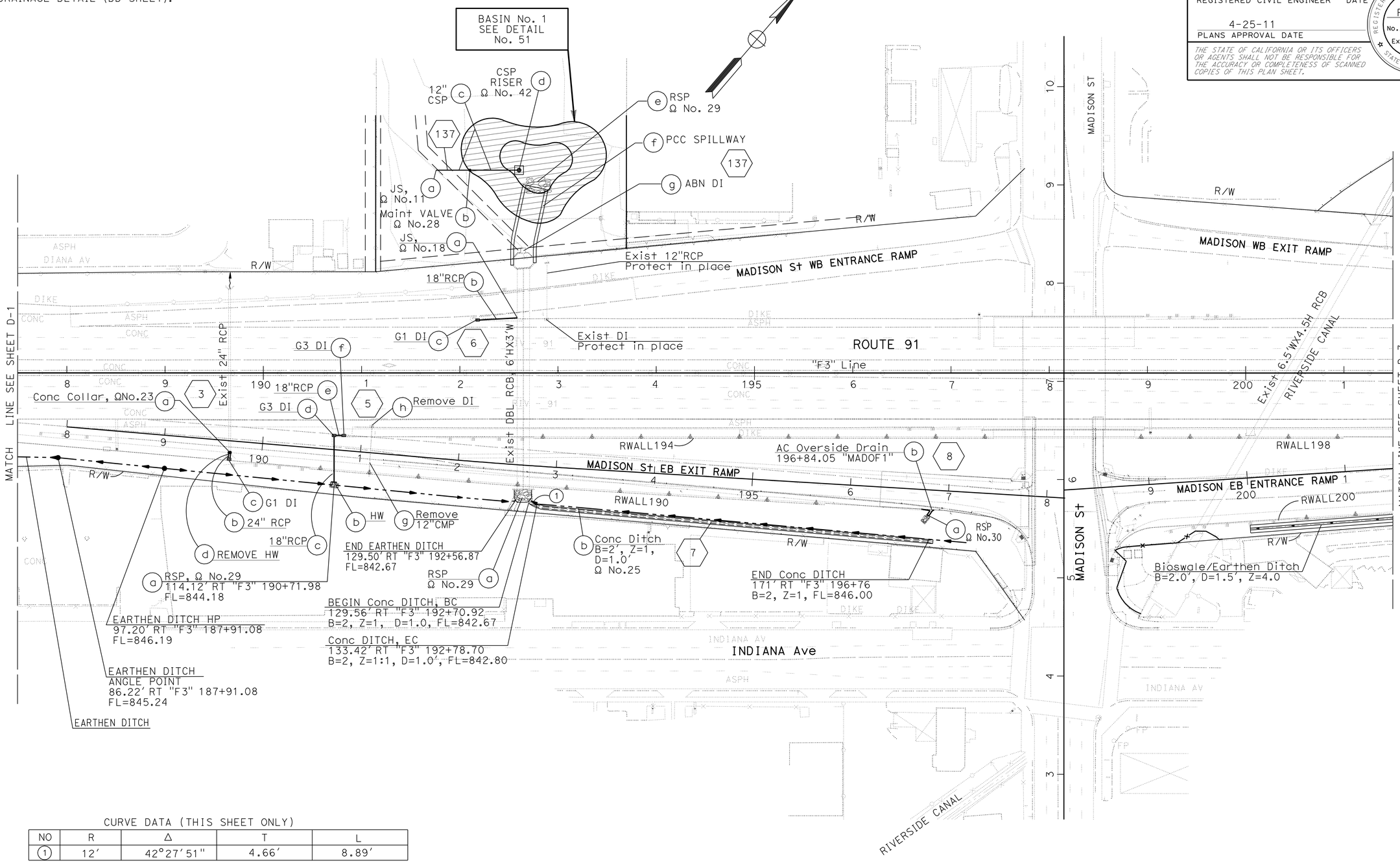

CURVE DATA (THIS SHEET ONLY)

NO	R	Δ	T	L
1	12'	42°27'51"	4.66'	8.89'

DRAINAGE PLAN

SCALE: 1" = 50'

D-2

THIS PLAN ACCURATE FOR DRAINAGE WORK ONLY.

STATE OF CALIFORNIA - DEPARTMENT OF TRANSPORTATION

DESIGN

FUNCTIONAL SUPERVISOR: MARK PERTILE

CALCULATED-DESIGNED BY: MOHAMMAD ABDRABOH

CHECKED BY: ALAN R. BISI

REVISED BY

DATE REVISED

LAST REVISION 03-29-11

DATE PLOTTED => 29-APR-2011

TIME PLOTTED => 17:30

Dist	COUNTY	ROUTE	POST MILES TOTAL PROJECT	SHEET No.	TOTAL SHEETS
08	Riv	91	15.6/21.6	223	2028

REGISTERED CIVIL ENGINEER 3-29-10 DATE

4-25-11
PLANS APPROVAL DATE

REGISTERED PROFESSIONAL ENGINEER ALAN R. BISI No. C62808 Exp. 6-30-12 CIVIL STATE OF CALIFORNIA

THE STATE OF CALIFORNIA OR ITS OFFICERS OR AGENTS SHALL NOT BE RESPONSIBLE FOR THE ACCURACY OR COMPLETENESS OF SCANNED COPIES OF THIS PLAN SHEET.

NOTE:

FOR ACCURATE RIGHT OF WAY AND ACCESS DATA,
CONTACT RIGHT OF WAY ENGINEERING AT THE DISTRICT OFFICE.

Ω - SEE DRAINAGE DETAIL (DD SHEET).

CURVE DATA (THIS SHEET ONLY)

No.	R	Δ	T	L
1	20′	34°02′12"	6.12′	11.88′
2	20′	34°02′12"	6.12′	11.88′
3	30′	40°08′37"	10.96′	11.88′

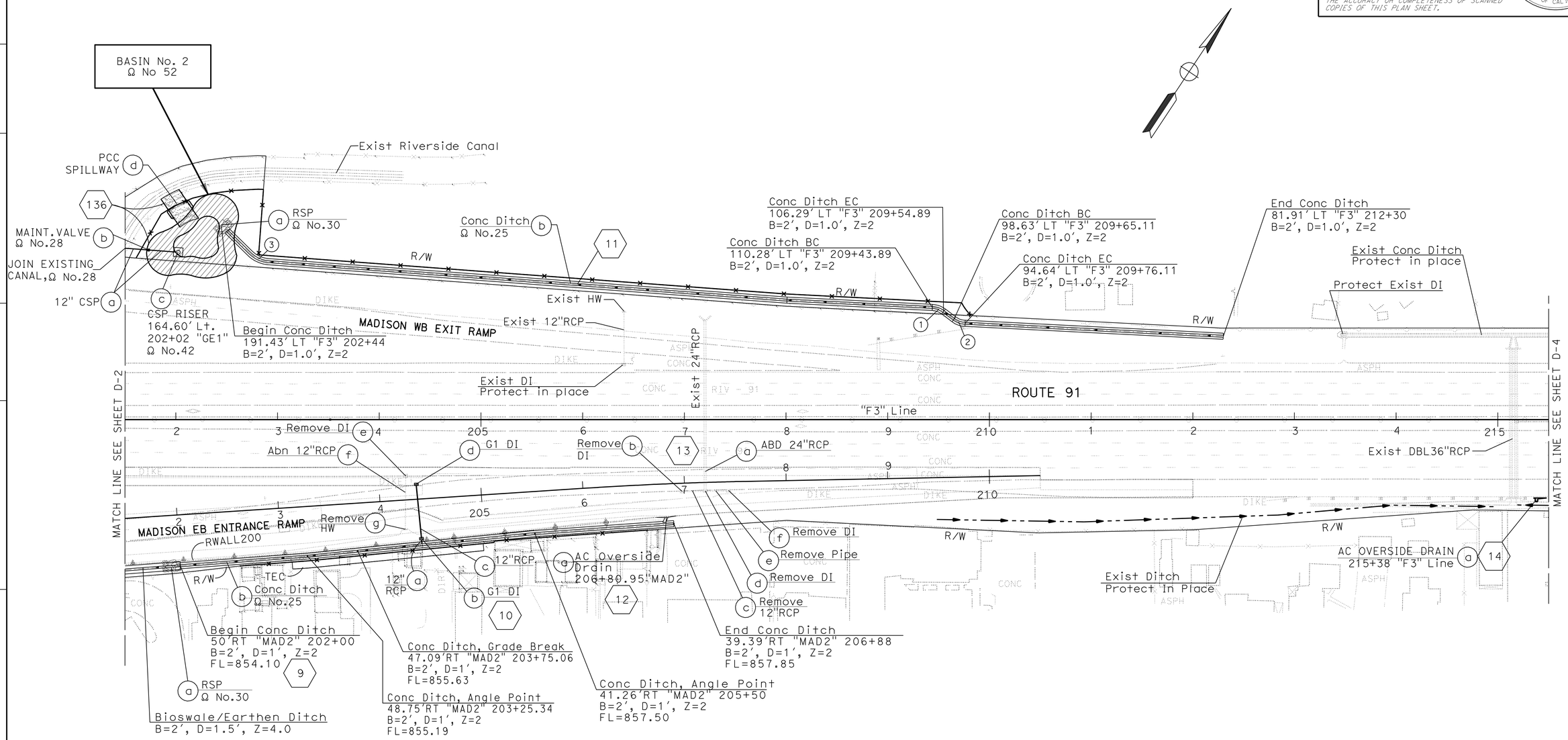

DRAINAGE PLAN

SCALE: 1" = 50′

D-3

THIS PLAN ACCURATE FOR DRAINAGE WORK ONLY.

STATE OF CALIFORNIA - DEPARTMENT OF TRANSPORTATION
Caltrans® DESIGN

FUNCTIONAL SUPERVISOR: MARK PERTILE
CALCULATED-DESIGNED BY: MOHAMMAD ABDRABOH
CHECKED BY: ALAN R. BISI
REVISED BY / DATE REVISED

LAST REVISION 03-29-11 | DATE PLOTTED => 29-APR-2011 | TIME PLOTTED => 17:31

BORDER LAST REVISED 4/11/2008 | RELATIVE BORDER SCALE IS IN INCHES 0 1 2 3 | USERNAME => trphils | DGN FILE => 844840ia003.dgn | CU 08227 | EA 448401

Dist	COUNTY	ROUTE	POST MILES TOTAL PROJECT	SHEET No.	TOTAL SHEETS
08	Riv	91	15.6/21.6	224	2028

REGISTERED CIVIL ENGINEER 3-29-10 DATE

4-25-11
PLANS APPROVAL DATE

REGISTERED PROFESSIONAL ENGINEER ALAN R. BISI No. C62808 Exp. 6-30-12 CIVIL STATE OF CALIFORNIA

THE STATE OF CALIFORNIA OR ITS OFFICERS OR AGENTS SHALL NOT BE RESPONSIBLE FOR THE ACCURACY OR COMPLETENESS OF SCANNED COPIES OF THIS PLAN SHEET.

NOTE:

FOR ACCURATE RIGHT OF WAY AND ACCESS DATA,
CONTACT RIGHT OF WAY ENGINEERING AT THE DISTRICT OFFICE.

Ω - SEE DRAINAGE DETAIL (DD SHEET).

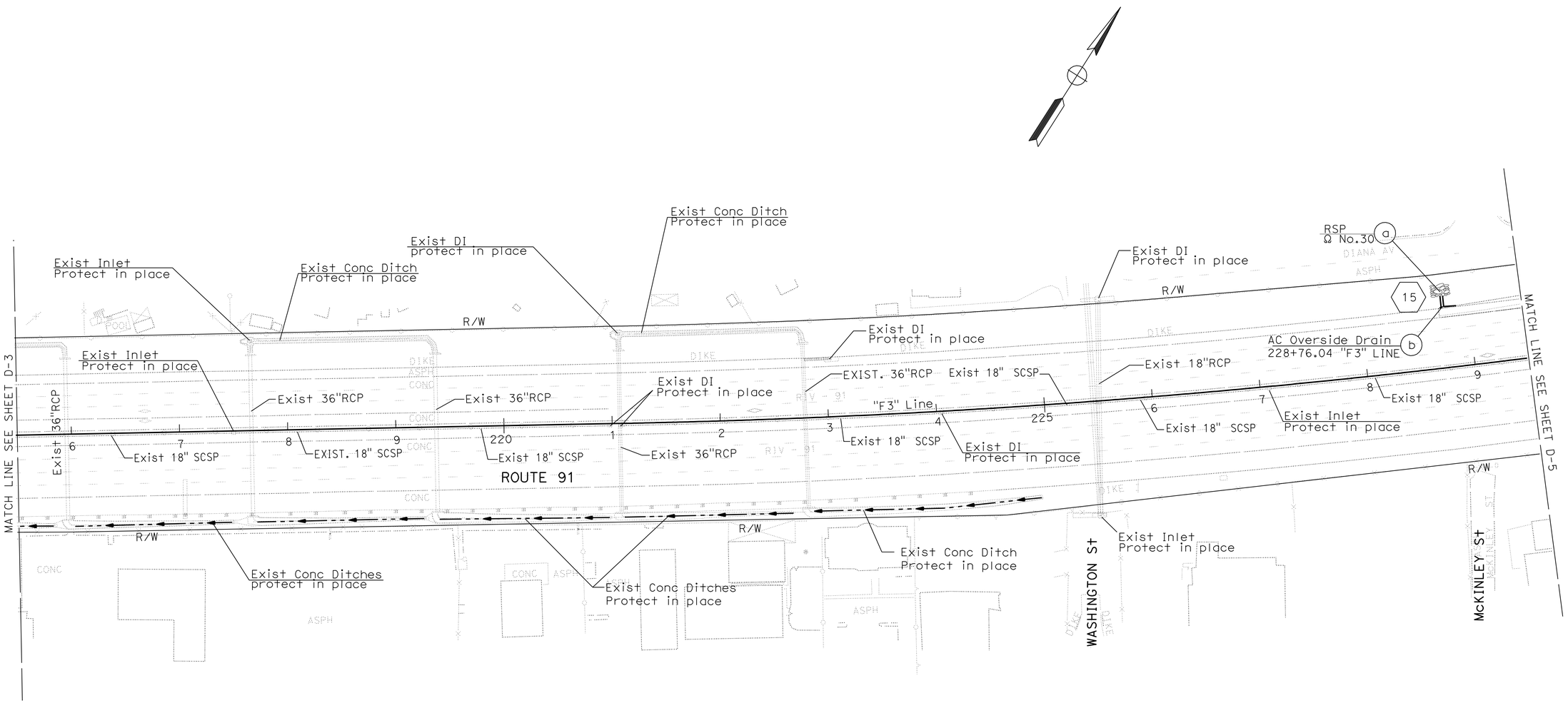

DRAINAGE PLAN

SCALE: 1" = 50'

D-4

THIS PLAN ACCURATE FOR DRAINAGE WORK ONLY.

STATE OF CALIFORNIA - DEPARTMENT OF TRANSPORTATION
Caltrans® DESIGN

FUNCTIONAL SUPERVISOR: MARK PERTILE

CALCULATED-DESIGNED BY: MOHAMMAD ABDRABOH
CHECKED BY: ALAN R. BISI

REVISED BY
DATE REVISED

LAST REVISION 03-29-11 | DATE PLOTTED => 29-APR-2011 | TIME PLOTTED => 17:31

Dist	COUNTY	ROUTE	POST MILES TOTAL PROJECT	SHEET No.	TOTAL SHEETS
08	Riv	91	15.6/21.6	225	2028

REGISTERED CIVIL ENGINEER 3-29-10 DATE

4-25-11
PLANS APPROVAL DATE

REGISTERED PROFESSIONAL ENGINEER ALAN R. BISI No. C62808 Exp. 6-30-12 CIVIL STATE OF CALIFORNIA

THE STATE OF CALIFORNIA OR ITS OFFICERS OR AGENTS SHALL NOT BE RESPONSIBLE FOR THE ACCURACY OR COMPLETENESS OF SCANNED COPIES OF THIS PLAN SHEET.

NOTE:

FOR ACCURATE RIGHT OF WAY AND ACCESS DATA,
CONTACT RIGHT OF WAY ENGINEERING AT THE DISTRICT OFFICE.

Ω - SEE DRAINAGE DETAIL (DD SHEET).

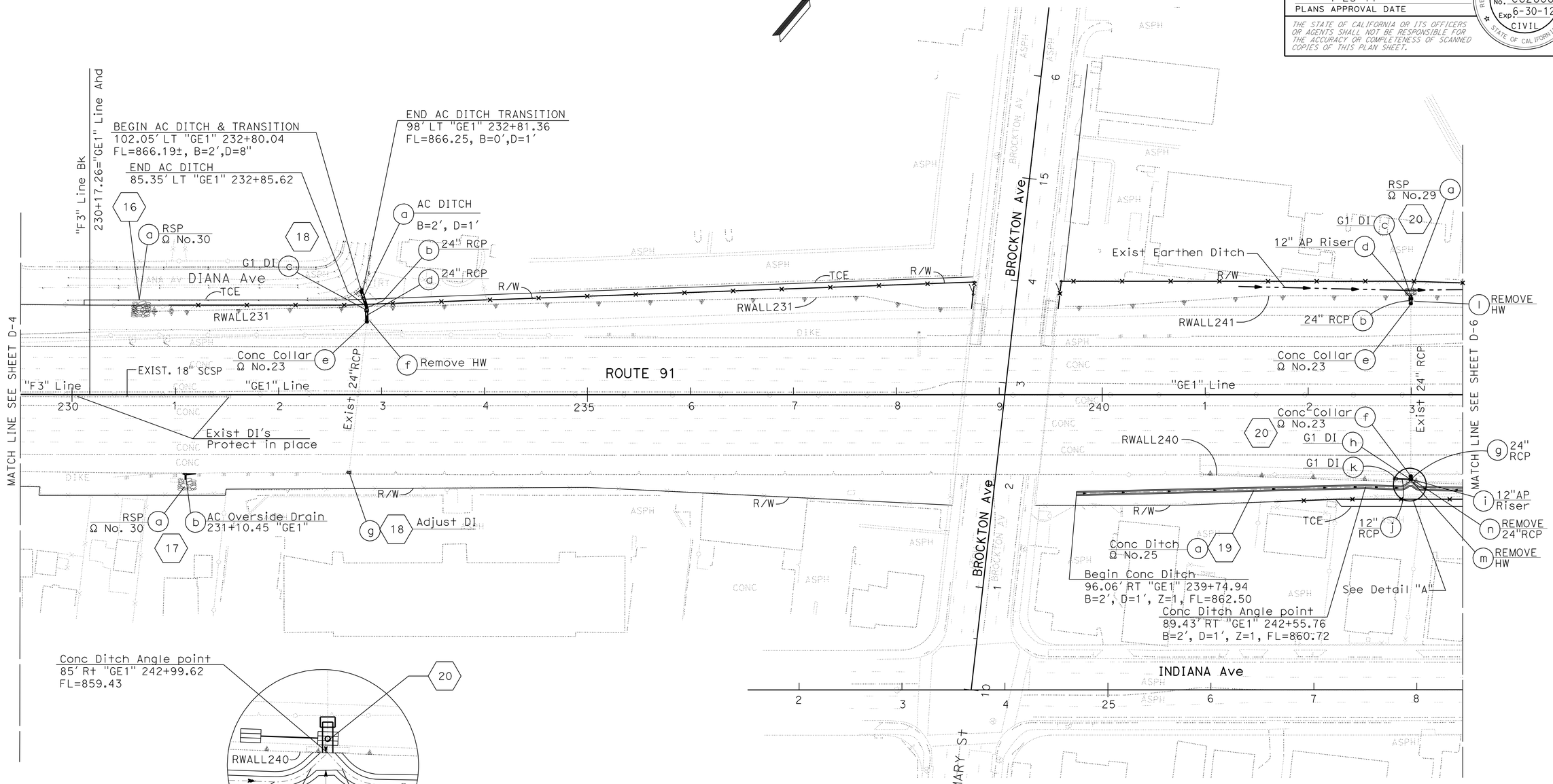

DETAIL "A"
NTS

DRAINAGE PLAN

SCALE: 1" = 50'

D-5

THIS PLAN ACCURATE FOR DRAINAGE WORK ONLY.

STATE OF CALIFORNIA - DEPARTMENT OF TRANSPORTATION
Caltrans® DESIGN

FUNCTIONAL SUPERVISOR: MARK PERTILE
CALCULATED-DESIGNED BY: MOHAMMAD ABDRABOH
CHECKED BY: ALAN R. BISI
REVISED BY
DATE REVISED

LAST REVISION 03-29-11
DATE PLOTTED => 29-APR-2011
TIME PLOTTED => 17:31

Dist	COUNTY	ROUTE	POST MILES TOTAL PROJECT	SHEET No.	TOTAL SHEETS
08	Riv	91	15.6/21.6	226	2028

REGISTERED CIVIL ENGINEER 3-29-10 DATE

4-25-11
PLANS APPROVAL DATE

REGISTERED PROFESSIONAL ENGINEER ALAN R. BISI No. C62808 Exp. 6-30-12 CIVIL STATE OF CALIFORNIA

THE STATE OF CALIFORNIA OR ITS OFFICERS OR AGENTS SHALL NOT BE RESPONSIBLE FOR THE ACCURACY OR COMPLETENESS OF SCANNED COPIES OF THIS PLAN SHEET.

NOTE:

FOR ACCURATE RIGHT OF WAY AND ACCESS DATA,
CONTACT RIGHT OF WAY ENGINEERING AT THE DISTRICT OFFICE.

Ω - SEE DRAINAGE DETAIL (DD SHEET).

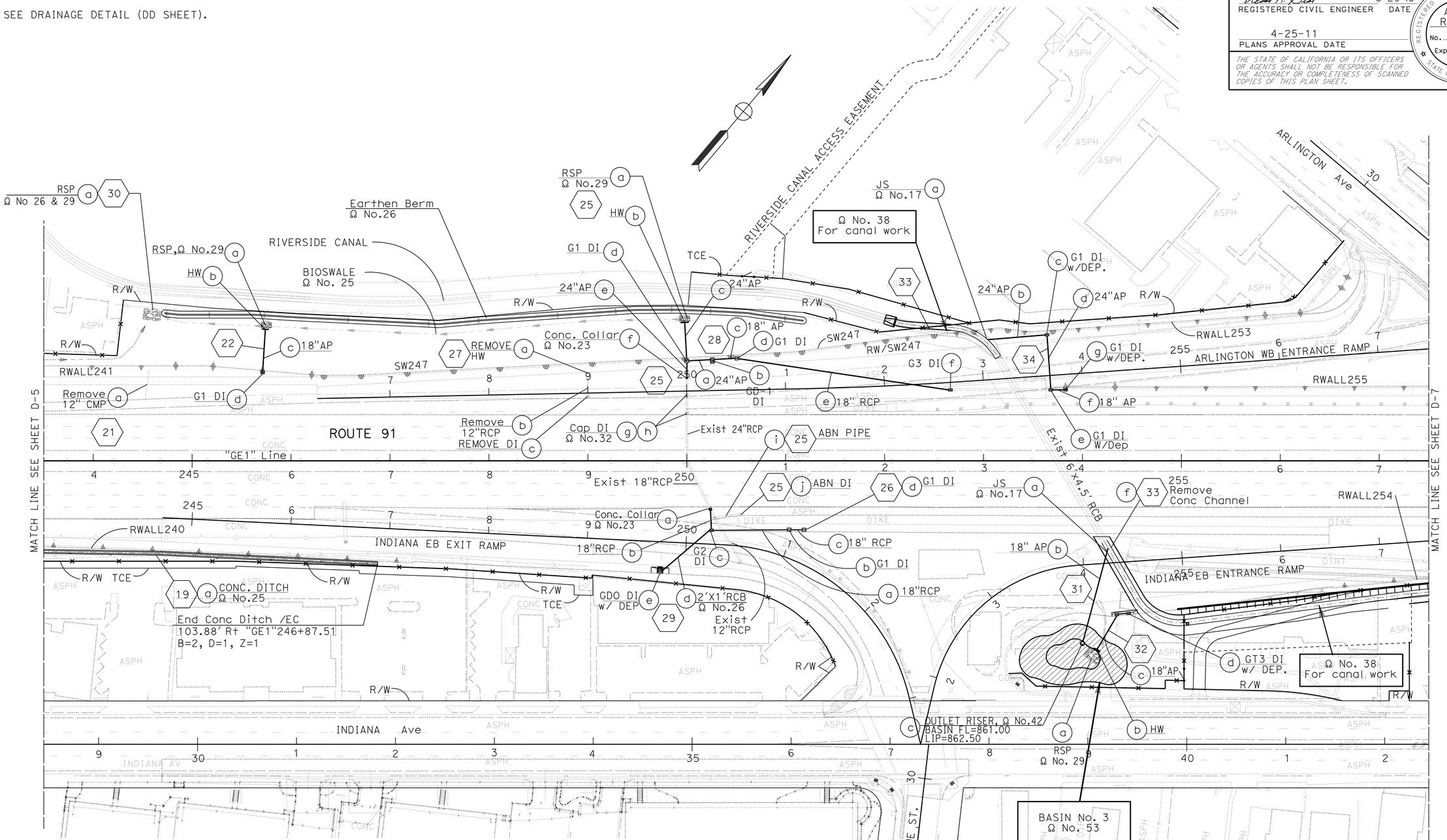

DRAINAGE PLAN

SCALE: 1" = 50'

D-6

THIS PLAN ACCURATE FOR DRAINAGE WORK ONLY.

STATE OF CALIFORNIA - DEPARTMENT OF TRANSPORTATION

Caltrans® DESIGN

FUNCTIONAL SUPERVISOR: MARK PERTILE

CALCULATED-DESIGNED BY: MOHAMMAD ABDRABOH

CHECKED BY: ALAN R. BISI

REVISED BY | DATE REVISED

LAST REVISION 03-29-11 | DATE PLOTTED => 29-APR-2011 | TIME PLOTTED => 17:31

Dist	COUNTY	ROUTE	POST MILES TOTAL PROJECT	SHEET No.	TOTAL SHEETS
08	Riv	91	15.6/21.6	227	2028

REGISTERED CIVIL ENGINEER 3-29-10 DATE

4-25-11
PLANS APPROVAL DATE

REGISTERED PROFESSIONAL ENGINEER ALAN R. BISI No. C62808 Exp. 6-30-12 CIVIL STATE OF CALIFORNIA

THE STATE OF CALIFORNIA OR ITS OFFICERS OR AGENTS SHALL NOT BE RESPONSIBLE FOR THE ACCURACY OR COMPLETENESS OF SCANNED COPIES OF THIS PLAN SHEET.

NOTE:

1. FOR ACCURATE RIGHT OF WAY AND ACCESS DATA, CONTACT RIGHT OF WAY ENGINEERING AT THE DISTRICT OFFICE.
2. ✱ - SEE DRAINAGE DETAIL No. 39 FOR REMOVAL & ABANDONMENT LIMITS FOR DEMARKED DRAINAGE SYSTEMS.
3. Ω - SEE DRAINAGE DETAIL (DD SHEET).

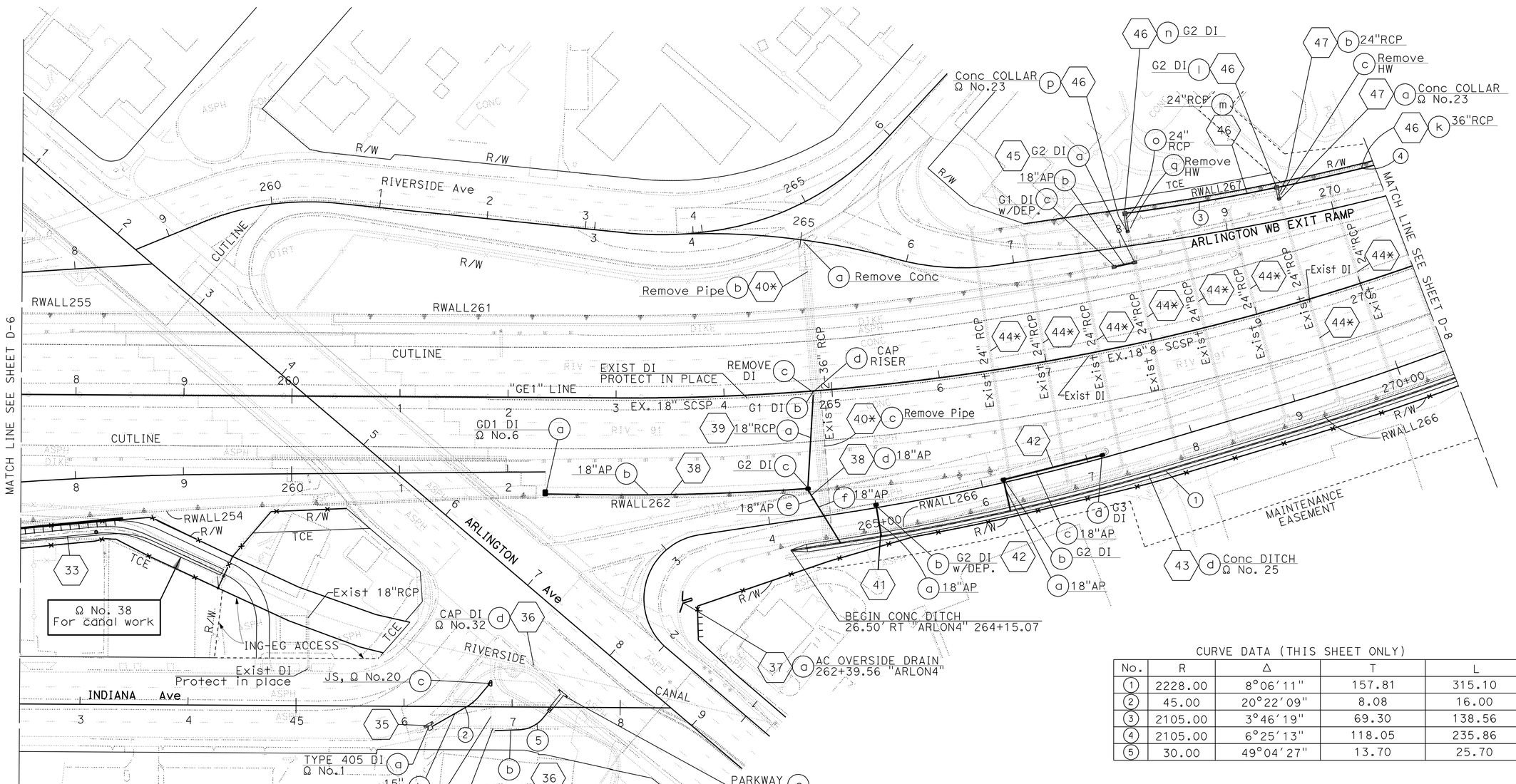

CURVE DATA (THIS SHEET ONLY)

No.	R	Δ	T	L
1	2228.00	8°06'11"	157.81	315.10
2	45.00	20°22'09"	8.08	16.00
3	2105.00	3°46'19"	69.30	138.56
4	2105.00	6°25'13"	118.05	235.86
5	30.00	49°04'27"	13.70	25.70

DRAINAGE PLAN

SCALE: 1" = 50'

D-7

THIS PLAN ACCURATE FOR DRAINAGE WORK ONLY.

STATE OF CALIFORNIA - DEPARTMENT OF TRANSPORTATION

Caltrans® DESIGN

FUNCTIONAL SUPERVISOR: MARK PERTILE

CALCULATED-DESIGNED BY: MOHAMMAD ABDRABOH

CHECKED BY: ALAN R. BISI

REVISED BY | DATE REVISED

LAST REVISION 03-29-11 | DATE PLOTTED => 29-APR-2011 | TIME PLOTTED => 17:31

BORDER LAST REVISED 4/11/2008 | RELATIVE BORDER SCALE IS IN INCHES 0 1 2 3 | USERNAME => trphils | DGN FILE => 844840ia007.dgn | CU 08227 | EA 448401

Dist	COUNTY	ROUTE	POST MILES TOTAL PROJECT	SHEET No.	TOTAL SHEETS
08	Riv	91	15.6/21.6	228	2028

REGISTERED CIVIL ENGINEER 3-29-10 DATE

4-25-11
PLANS APPROVAL DATE

REGISTERED PROFESSIONAL ENGINEER ALAN R. BISI No. C62808 Exp. 6-30-12 CIVIL STATE OF CALIFORNIA

THE STATE OF CALIFORNIA OR ITS OFFICERS OR AGENTS SHALL NOT BE RESPONSIBLE FOR THE ACCURACY OR COMPLETENESS OF SCANNED COPIES OF THIS PLAN SHEET.

NOTE:

1. FOR ACCURATE RIGHT OF WAY AND ACCESS DATA, CONTACT RIGHT OF WAY ENGINEERING AT THE DISTRICT OFFICE.
2. ✱ - SEE DRAINAGE DETAIL No. 37 FOR REMOVAL AND ABANDONMENT LIMITS FOR DEMARKED DRAINAGE SYSTEMS.
3. Ω - SEE DRAINAGE DETAIL (DD SHEET).

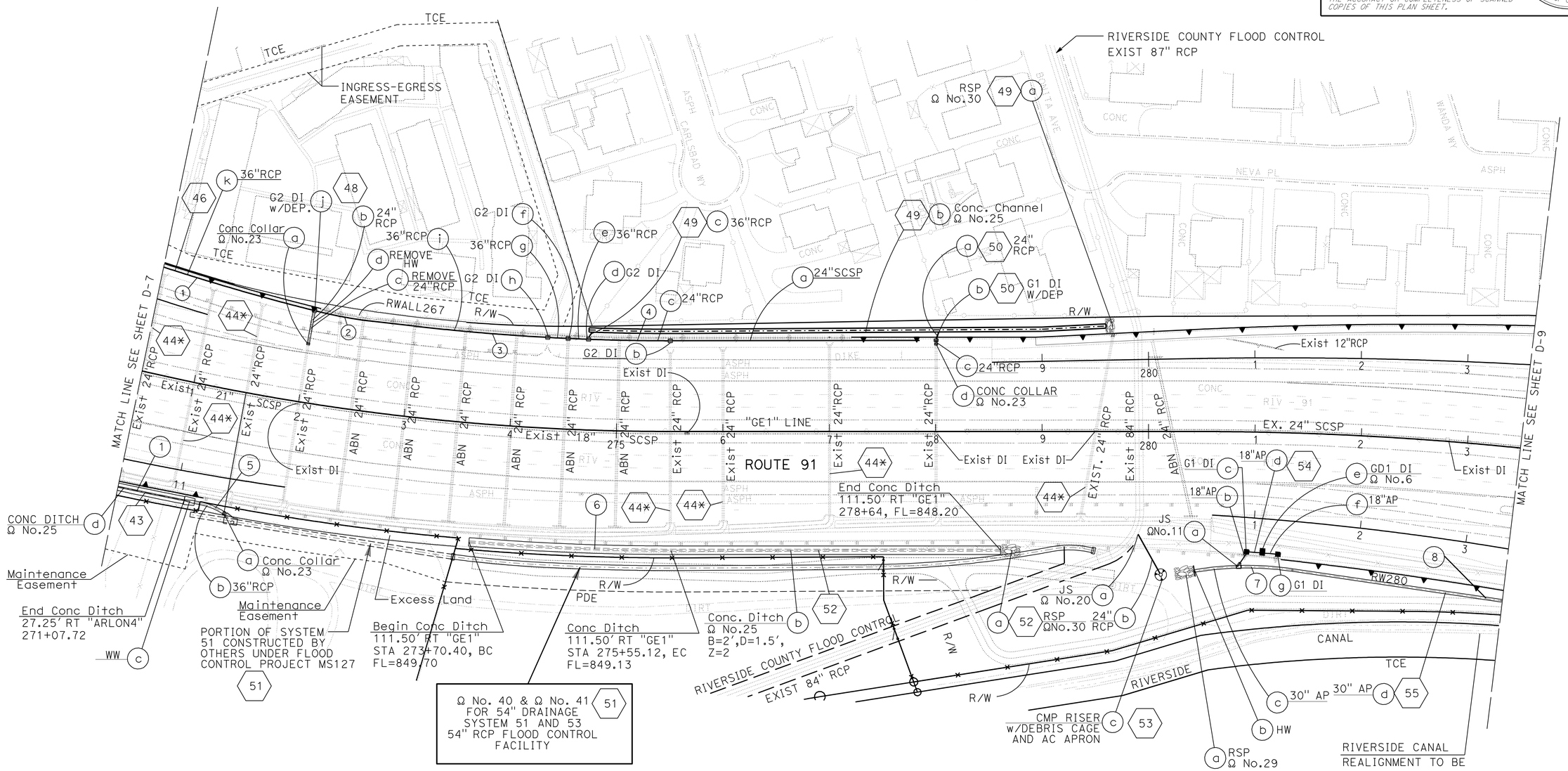

CURVE DATA (THIS SHEET ONLY)

No.	R	Δ	T	L
1	2104.80	6°25'13"	118.05	235.86
2	404.78	7°35'35"	26.86	53.64
3	2114.80	3°21'11"	61.90	123.77
4	2114.80	1°58'23"	36.42	72.82
5	60.00	28°19'37"	15.14	29.66
6	2311.50	4°42'27"	95.01	189.91
7	296.90	17°55'43"	46.84	92.92
8	2990.50	7°57'12"	207.89	415.12

THIS PLAN ACCURATE FOR DRAINAGE WORK ONLY.

DRAINAGE PLAN

SCALE: 1" = 50'

D-8

STATE OF CALIFORNIA - DEPARTMENT OF TRANSPORTATION
Caltrans® DESIGN

FUNCTIONAL SUPERVISOR: MARK PERTILE
CALCULATED-DESIGNED BY: MOHAMMAD ABDRABOH
CHECKED BY: ALAN R. BISI
REVISED BY / DATE REVISED

LAST REVISION 03-29-11 | DATE PLOTTED => 29-APR-2011 | TIME PLOTTED => 17:31

Dist	COUNTY	ROUTE	POST MILES TOTAL PROJECT	SHEET No.	TOTAL SHEETS
08	Riv	91	15.6/21.6	229	2028

REGISTERED CIVIL ENGINEER 3-29-10 DATE

4-25-11
PLANS APPROVAL DATE

REGISTERED PROFESSIONAL ENGINEER ALAN R. BISI No. C62808 Exp. 6-30-12 CIVIL STATE OF CALIFORNIA

THE STATE OF CALIFORNIA OR ITS OFFICERS OR AGENTS SHALL NOT BE RESPONSIBLE FOR THE ACCURACY OR COMPLETENESS OF SCANNED COPIES OF THIS PLAN SHEET.

NOTE:

1. FOR ACCURATE RIGHT OF WAY AND ACCESS DATA, CONTACT RIGHT OF WAY ENGINEERING AT THE DISTRICT OFFICE.
2. Ω - SEE DRAINAGE DETAIL (DD SHEET).

CURVE DATA (THIS SHEET ONLY)

No.	R	Δ	T	L
1	90.00	57°25′25″	49.30′	90.20′
2	18.70	56°15′41″	10.00′	18.37′
3	3000.00	7°56′16″	208.14′	415.62′

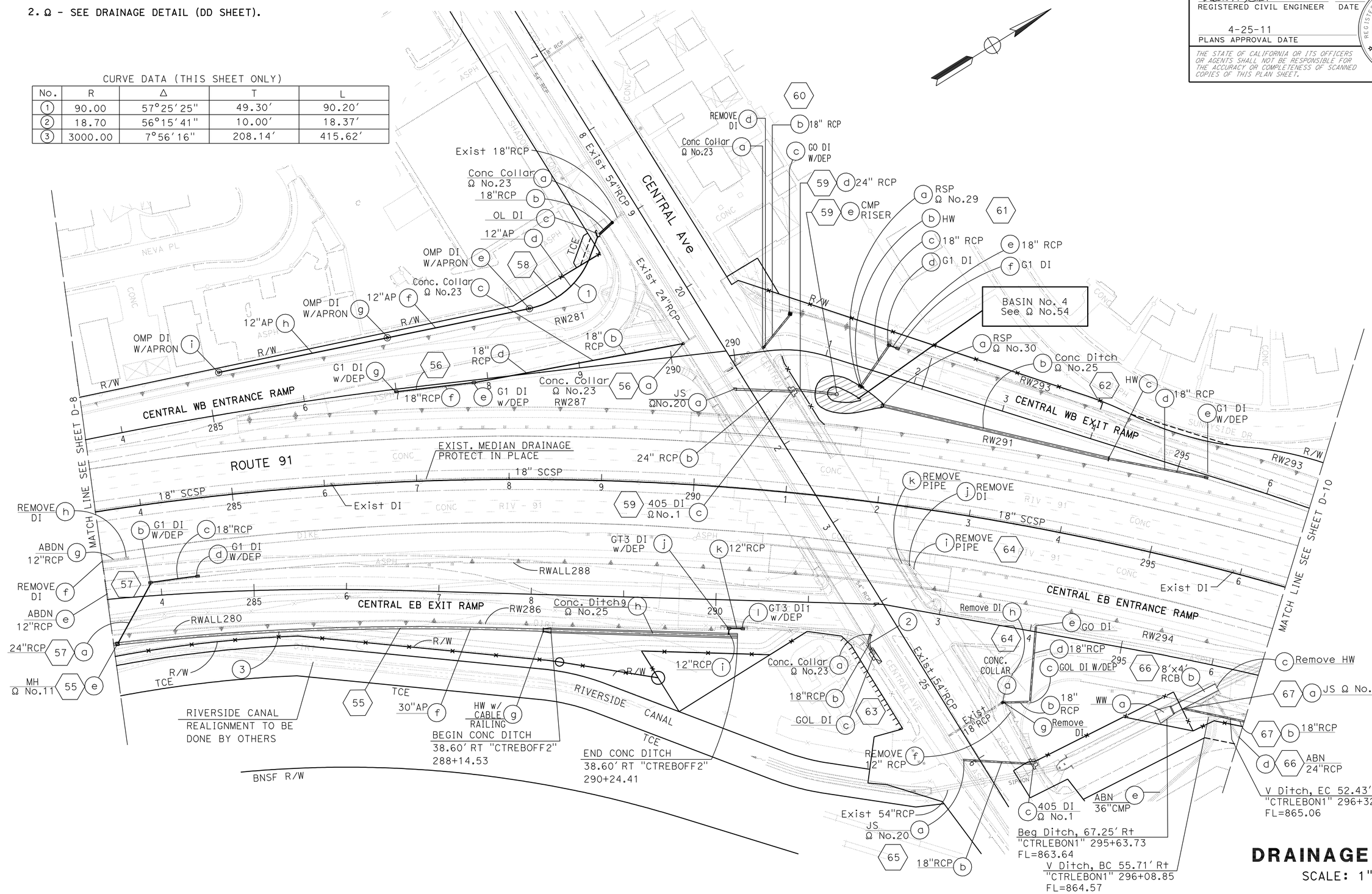

DRAINAGE PLAN

SCALE: 1" = 50′

D-9

THIS PLAN ACCURATE FOR DRAINAGE WORK ONLY.

STATE OF CALIFORNIA - DEPARTMENT OF TRANSPORTATION

Caltrans DESIGN

FUNCTIONAL SUPERVISOR: MARK PERTILE

CALCULATED-DESIGNED BY: MOHAMMAD ABDRABOH

CHECKED BY: ALAN R. BISI

REVISED BY / DATE REVISED

LAST REVISION 03-29-11

DATE PLOTTED => 29-APR-2011
TIME PLOTTED => 17:31

Dist	COUNTY	ROUTE	POST MILES TOTAL PROJECT	SHEET No.	TOTAL SHEETS
08	Riv	91	15.6/21.6	230	2028

REGISTERED CIVIL ENGINEER 3-29-10 DATE

4-25-11
PLANS APPROVAL DATE

REGISTERED PROFESSIONAL ENGINEER ALAN R. BISI No. C62808 Exp. 6-30-12 CIVIL STATE OF CALIFORNIA

THE STATE OF CALIFORNIA OR ITS OFFICERS OR AGENTS SHALL NOT BE RESPONSIBLE FOR THE ACCURACY OR COMPLETENESS OF SCANNED COPIES OF THIS PLAN SHEET.

NOTE:

FOR ACCURATE RIGHT OF WAY AND ACCESS DATA,
CONTACT RIGHT OF WAY ENGINEERING AT THE DISTRICT OFFICE.

Ω - SEE DRAINAGE DETAIL (DD SHEET).

CURVE DATA

No.	R	Δ	T	L
1	2629.83′	8°42′34"	200.26′	399.76′
2	2398.97′	7°02′33"	147.62′	294.87′
3	1396.00′	9°46′50"	119.44′	238.30′

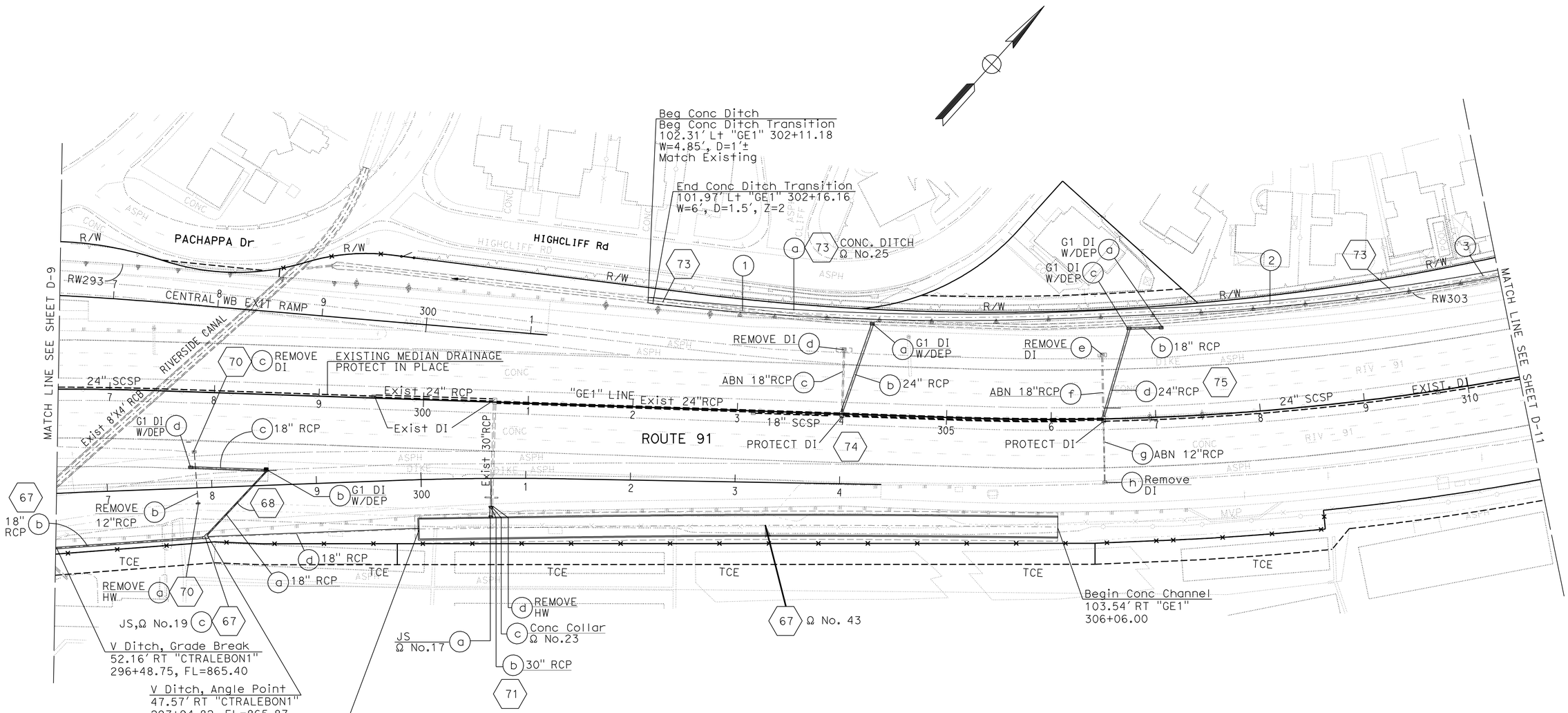

THIS PLAN ACCURATE FOR DRAINAGE WORK ONLY.

DRAINAGE PLAN

SCALE: 1" = 50′

D-10

STATE OF CALIFORNIA - DEPARTMENT OF TRANSPORTATION
Caltrans® DESIGN

FUNCTIONAL SUPERVISOR: MARK PERTILE
CALCULATED-DESIGNED BY: MOHAMMAD ABDRABOH
CHECKED BY: ALAN R. BISI
REVISED BY
DATE REVISED

LAST REVISION 03-29-11
DATE PLOTTED => 29-APR-2011
TIME PLOTTED => 17:31

Dist	COUNTY	ROUTE	POST MILES TOTAL PROJECT	SHEET No.	TOTAL SHEETS
08	Riv	91	15.6/21.6	231	2028

REGISTERED CIVIL ENGINEER 3-29-10 DATE

4-25-11
PLANS APPROVAL DATE

REGISTERED PROFESSIONAL ENGINEER ALAN R. BISI No. C62808 Exp. 6-30-12 CIVIL STATE OF CALIFORNIA

THE STATE OF CALIFORNIA OR ITS OFFICERS OR AGENTS SHALL NOT BE RESPONSIBLE FOR THE ACCURACY OR COMPLETENESS OF SCANNED COPIES OF THIS PLAN SHEET.

NOTE:

FOR ACCURATE RIGHT OF WAY AND ACCESS DATA,
CONTACT RIGHT OF WAY ENGINEERING AT THE DISTRICT OFFICE.

Ω - SEE DRAINAGE DETAIL (DD SHEET).

CURVE DATA

No.	R	Δ	T	L
1	21.19′	66°22′01"	13.86′	24.55′

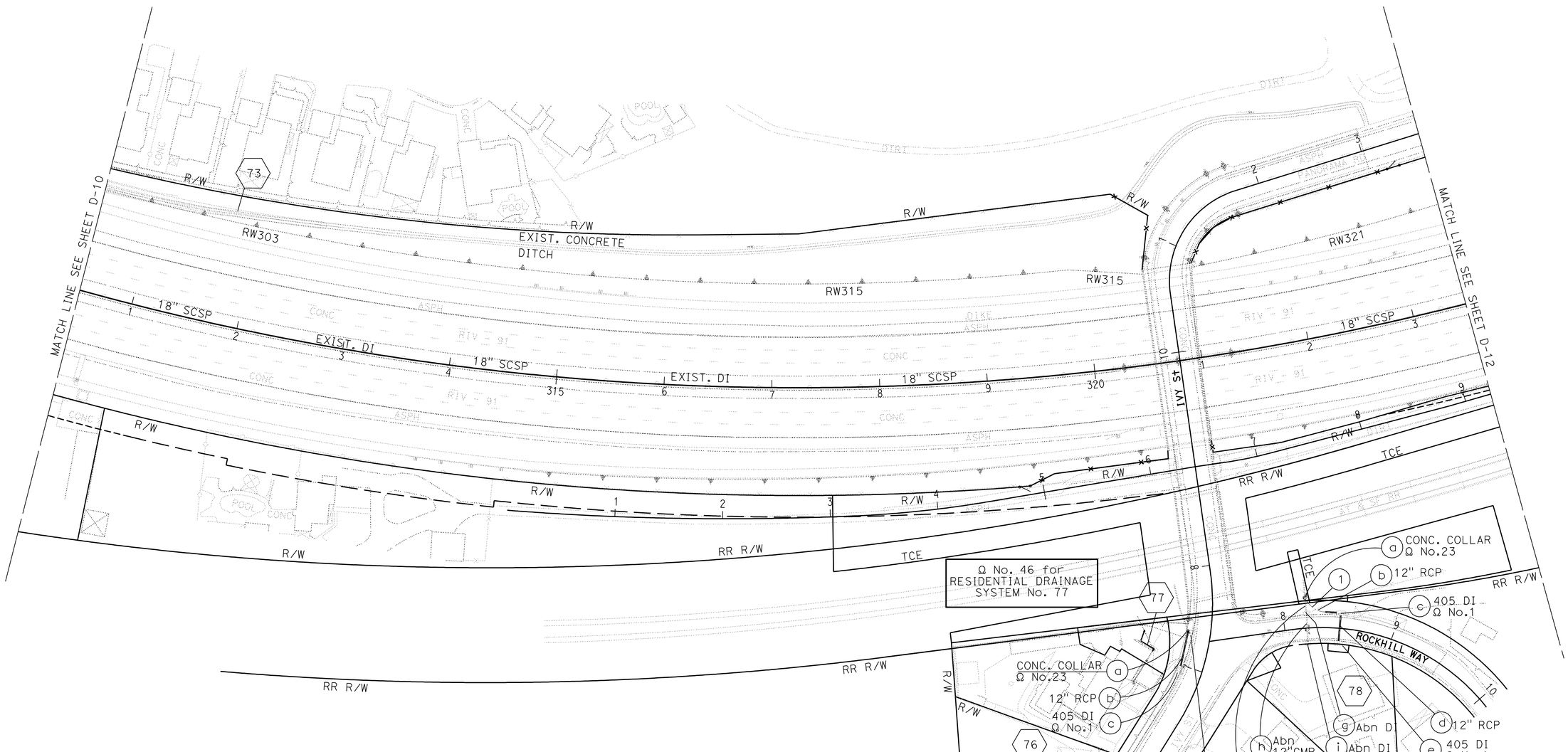

THIS PLAN ACCURATE FOR DRAINAGE WORK ONLY.

DRAINAGE PLAN

SCALE: 1" = 50′

D-11

STATE OF CALIFORNIA - DEPARTMENT OF TRANSPORTATION
Caltrans® DESIGN

FUNCTIONAL SUPERVISOR: MARK PERTILE

CALCULATED-DESIGNED BY: MOHAMMAD ABDRABOH
CHECKED BY: ALAN R. BISI

REVISED BY
DATE REVISED

LAST REVISION 03-29-11 | DATE PLOTTED => 29-APR-2011 | TIME PLOTTED => 17:32

Dist	COUNTY	ROUTE	POST MILES TOTAL PROJECT	SHEET No.	TOTAL SHEETS
08	Riv	91	15.6/21.6	232	2028

REGISTERED CIVIL ENGINEER 3-29-10 DATE

4-25-11
PLANS APPROVAL DATE

REGISTERED PROFESSIONAL ENGINEER ALAN R. BISI No. C62808 Exp. 6-30-12 CIVIL STATE OF CALIFORNIA

THE STATE OF CALIFORNIA OR ITS OFFICERS OR AGENTS SHALL NOT BE RESPONSIBLE FOR THE ACCURACY OR COMPLETENESS OF SCANNED COPIES OF THIS PLAN SHEET.

NOTE:

FOR ACCURATE RIGHT OF WAY AND ACCESS DATA,
CONTACT RIGHT OF WAY ENGINEERING AT THE DISTRICT OFFICE.

Ω - SEE DRAINAGE DETAIL (DD SHEET).

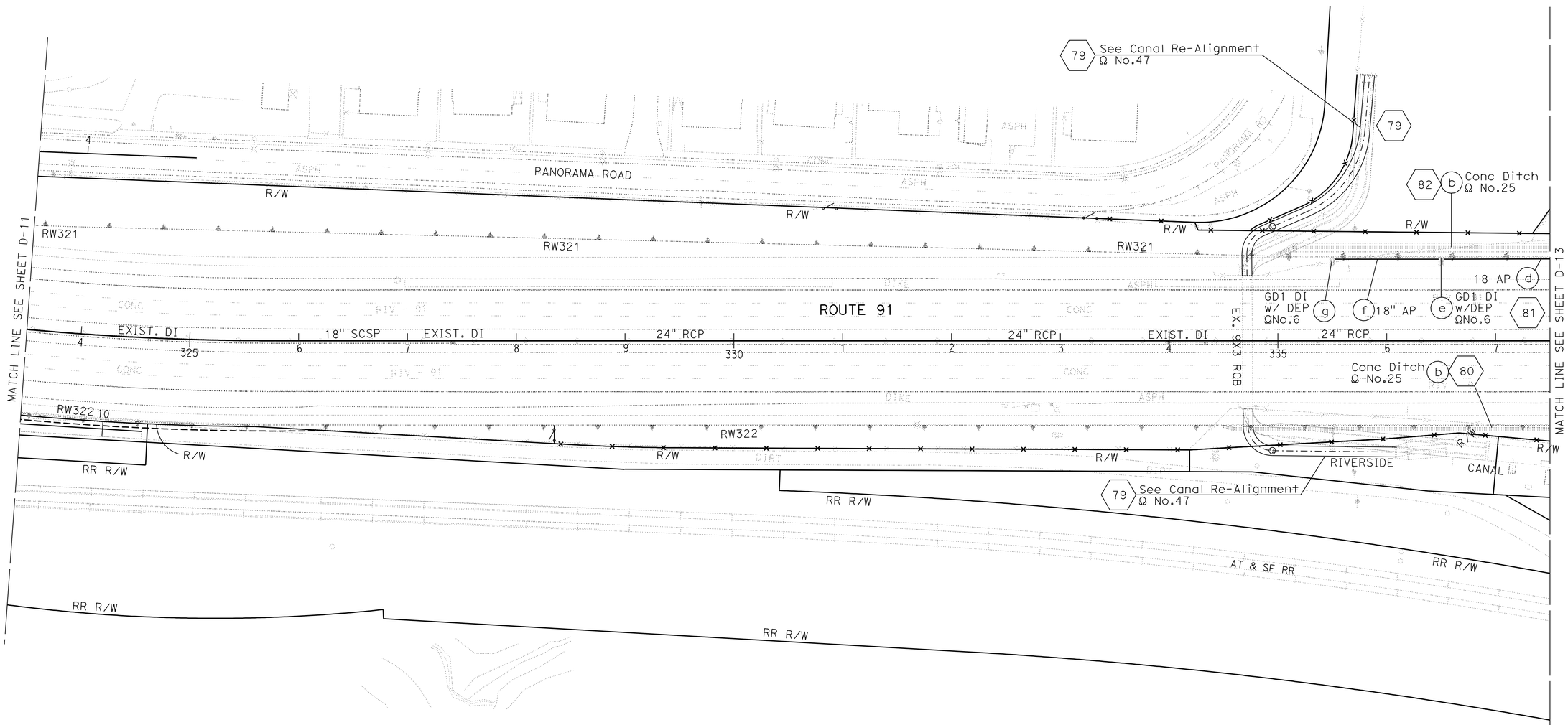

DRAINAGE PLAN

SCALE: 1" = 50'

D-12

THIS PLAN ACCURATE FOR DRAINAGE WORK ONLY.

STATE OF CALIFORNIA - DEPARTMENT OF TRANSPORTATION

Caltrans DESIGN

FUNCTIONAL SUPERVISOR: MARK PERTILE

CALCULATED-DESIGNED BY: MOHAMMAD ABDRABOH

CHECKED BY: ALAN R. BISI

REVISED BY

DATE REVISED

LAST REVISION 03-29-11

DATE PLOTTED => 30-APR-2011
TIME PLOTTED => 06:36

Dist	COUNTY	ROUTE	POST MILES TOTAL PROJECT	SHEET No.	TOTAL SHEETS
08	Riv	91	15.6/21.6	233	2028

REGISTERED CIVIL ENGINEER 3-29-10 DATE

4-25-11
PLANS APPROVAL DATE

REGISTERED PROFESSIONAL ENGINEER ALAN R. BISI No. C62808 Exp. 6-30-12 CIVIL STATE OF CALIFORNIA

THE STATE OF CALIFORNIA OR ITS OFFICERS OR AGENTS SHALL NOT BE RESPONSIBLE FOR THE ACCURACY OR COMPLETENESS OF SCANNED COPIES OF THIS PLAN SHEET.

NOTE:

FOR ACCURATE RIGHT OF WAY AND ACCESS DATA,
CONTACT RIGHT OF WAY ENGINEERING AT THE DISTRICT OFFICE.

Ω - SEE DRAINAGE DETAIL (DD SHEET).

CURVE DATA (THIS SHEET ONLY)

No.	R	Δ	T	L
1	50.00′	23°10′03"	10.25′	20.22′
2	90.00′	19°08′07"	15.17′	30.06′

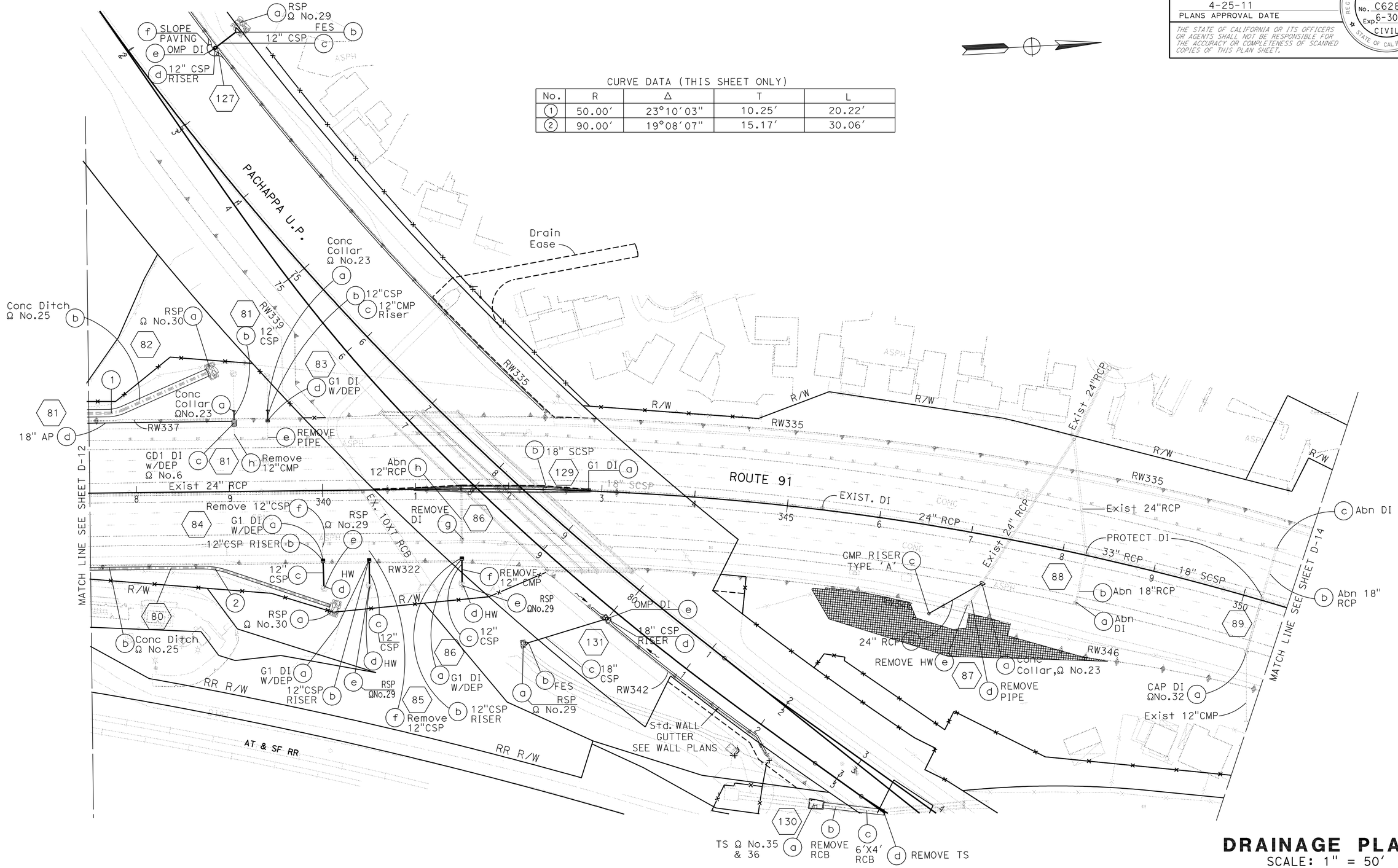

THIS PLAN ACCURATE FOR DRAINAGE WORK ONLY.

DRAINAGE PLAN

SCALE: 1" = 50′

D-13

STATE OF CALIFORNIA - DEPARTMENT OF TRANSPORTATION
Caltrans DESIGN

FUNCTIONAL SUPERVISOR: MARK PERTILE
CALCULATED-DESIGNED BY: MOHAMMAD ABDRABOH
CHECKED BY: ALAN R. BISI
REVISED BY / DATE REVISED

LAST REVISION 03-29-11
DATE PLOTTED => 29-APR-2011
TIME PLOTTED => 17:32

BORDER LAST REVISED 4/11/2008
RELATIVE BORDER SCALE IS IN INCHES 0 1 2 3
USERNAME => trphils
DGN FILE => 844840ia013.dgn
CU 08227
EA 448401

Dist	COUNTY	ROUTE	POST MILES TOTAL PROJECT	SHEET No.	TOTAL SHEETS
08	Riv	91	15.6/21.6	234	2028

REGISTERED CIVIL ENGINEER 3-29-10 DATE

4-25-11
PLANS APPROVAL DATE

REGISTERED PROFESSIONAL ENGINEER ALAN R. BISI No. C62808 Exp. 6-30-12 CIVIL STATE OF CALIFORNIA

THE STATE OF CALIFORNIA OR ITS OFFICERS OR AGENTS SHALL NOT BE RESPONSIBLE FOR THE ACCURACY OR COMPLETENESS OF SCANNED COPIES OF THIS PLAN SHEET.

NOTE:

FOR ACCURATE RIGHT OF WAY AND ACCESS DATA,
CONTACT RIGHT OF WAY ENGINEERING AT THE DISTRICT OFFICE.

Ω - SEE DRAINAGE DETAIL (DD SHEET).

CURVE DATA (THIS SHEET ONLY)

No.	R	Δ	T	L
1	126.32′	16°00′27"	17.76′	35.29′
2	116.92′	21°36′26"	22.31′	44.09′
3	144.06′	17°19′05"	21.94′	43.54′
4	144.24′	17°16′16"	21.91′	43.48′
5	147.97′	13°10′02"	17.08′	34.01′
6	113.69′	17°09′51"	17.16′	34.06′
7	122.15′	15°14′11"	16.34′	32.48′
8	122.15′	15°14′11"	16.34′	32.48′

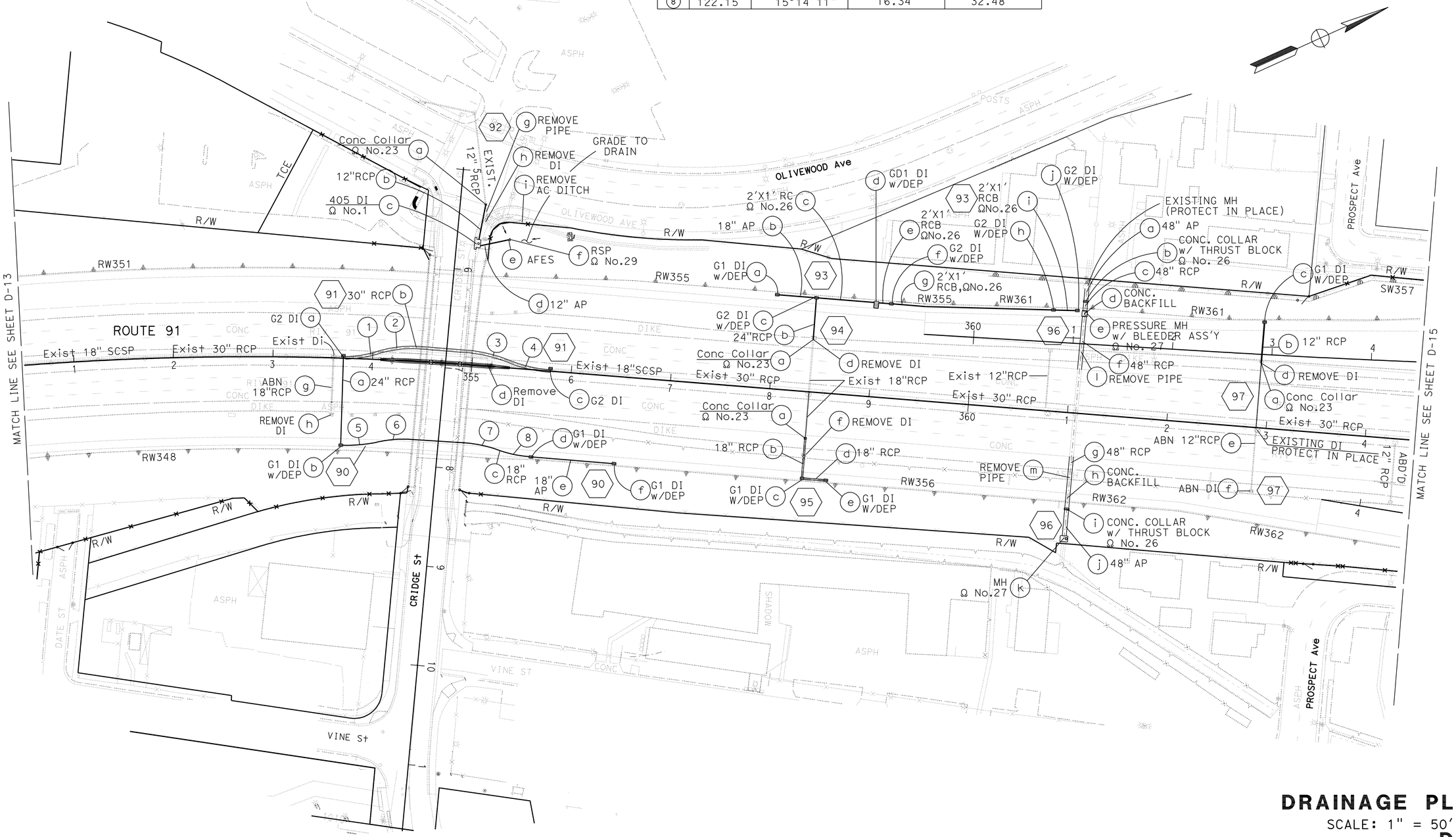

DRAINAGE PLAN

SCALE: 1" = 50′

D-14

THIS PLAN ACCURATE FOR DRAINAGE WORK ONLY.

STATE OF CALIFORNIA - DEPARTMENT OF TRANSPORTATION
Caltrans® DESIGN

FUNCTIONAL SUPERVISOR: MARK PERTILE
CALCULATED-DESIGNED BY: MOHAMMAD ABDRABOH
CHECKED BY: ALAN R. BISI
REVISED BY / DATE REVISED

LAST REVISION 03-29-11
DATE PLOTTED => 29-APR-2011
TIME PLOTTED => 17:32

BORDER LAST REVISED 4/11/2008
RELATIVE BORDER SCALE IS IN INCHES 0 1 2 3
USERNAME => trphils
DGN FILE => 844840ia014.dgn
CU 08227
EA 448401

Dist	COUNTY	ROUTE	POST MILES TOTAL PROJECT	SHEET No.	TOTAL SHEETS
08	Riv	91	15.6/21.6	235	2028

REGISTERED CIVIL ENGINEER 3-29-10 DATE

4-25-11
PLANS APPROVAL DATE

REGISTERED PROFESSIONAL ENGINEER ALAN R. BISI No. C62808 Exp. 6-30-12 CIVIL STATE OF CALIFORNIA

THE STATE OF CALIFORNIA OR ITS OFFICERS OR AGENTS SHALL NOT BE RESPONSIBLE FOR THE ACCURACY OR COMPLETENESS OF SCANNED COPIES OF THIS PLAN SHEET.

NOTE:

FOR ACCURATE RIGHT OF WAY AND ACCESS DATA, CONTACT RIGHT OF WAY ENGINEERING AT THE DISTRICT OFFICE.

Ω - SEE DRAINAGE DETAIL (DD SHEET).

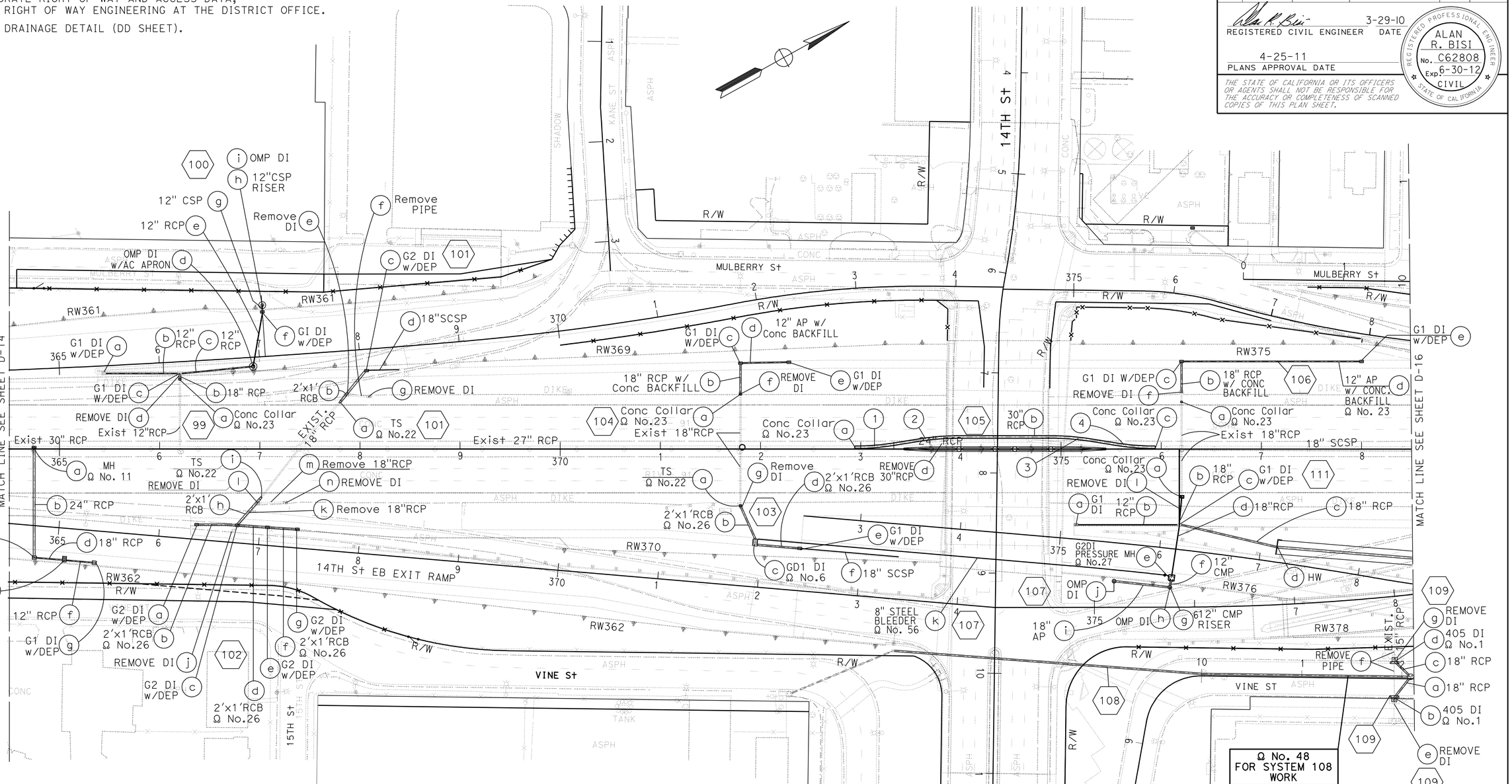

CURVE DATA

No.	R	Δ	T	L
1	246.08′	09°07′59"	19.65′	39.23′
2	253.58′	09°07′36"	20.24′	40.39′
3	253.58′	09°07′59"	20.25′	40.42′
4	246.08′	09°07′59"	19.65′	39.23′

DRAINAGE PLAN

SCALE: 1" = 50′

D-15

THIS PLAN ACCURATE FOR DRAINAGE WORK ONLY.

STATE OF CALIFORNIA - DEPARTMENT OF TRANSPORTATION

Caltrans® DESIGN

FUNCTIONAL SUPERVISOR: MARK PERTILE

CALCULATED-DESIGNED BY: MOHAMMAD ABDRABOH

CHECKED BY: ALAN R. BISI

REVISED BY | DATE REVISED

LAST REVISION 03-29-11 | DATE PLOTTED => 29-APR-2011 | TIME PLOTTED => 17:32

Dist	COUNTY	ROUTE	POST MILES TOTAL PROJECT	SHEET No.	TOTAL SHEETS
08	Riv	91	15.6/21.6	236	2028

REGISTERED CIVIL ENGINEER 3-29-10 DATE

PLANS APPROVAL DATE 4-25-11

REGISTERED PROFESSIONAL ENGINEER ALAN R. BISI No. C62808 Exp. 6-30-12 CIVIL STATE OF CALIFORNIA

THE STATE OF CALIFORNIA OR ITS OFFICERS OR AGENTS SHALL NOT BE RESPONSIBLE FOR THE ACCURACY OR COMPLETENESS OF SCANNED COPIES OF THIS PLAN SHEET.

CURVE DATA

NO	R	Δ	T	L
1	1079.50′	08°29′30″	80.14′	160.00′
2	1137.53′	17°43′09″	177.31′	351.79′
3	22.50′	28°18′38″	5.67′	11.12′
4	56.80′	19°06′21″	9.56′	18.94′
5	45.00′	30°00′00″	12.06′	23.56′
6	180.00′	04°30′11″	7.08′	14.15′

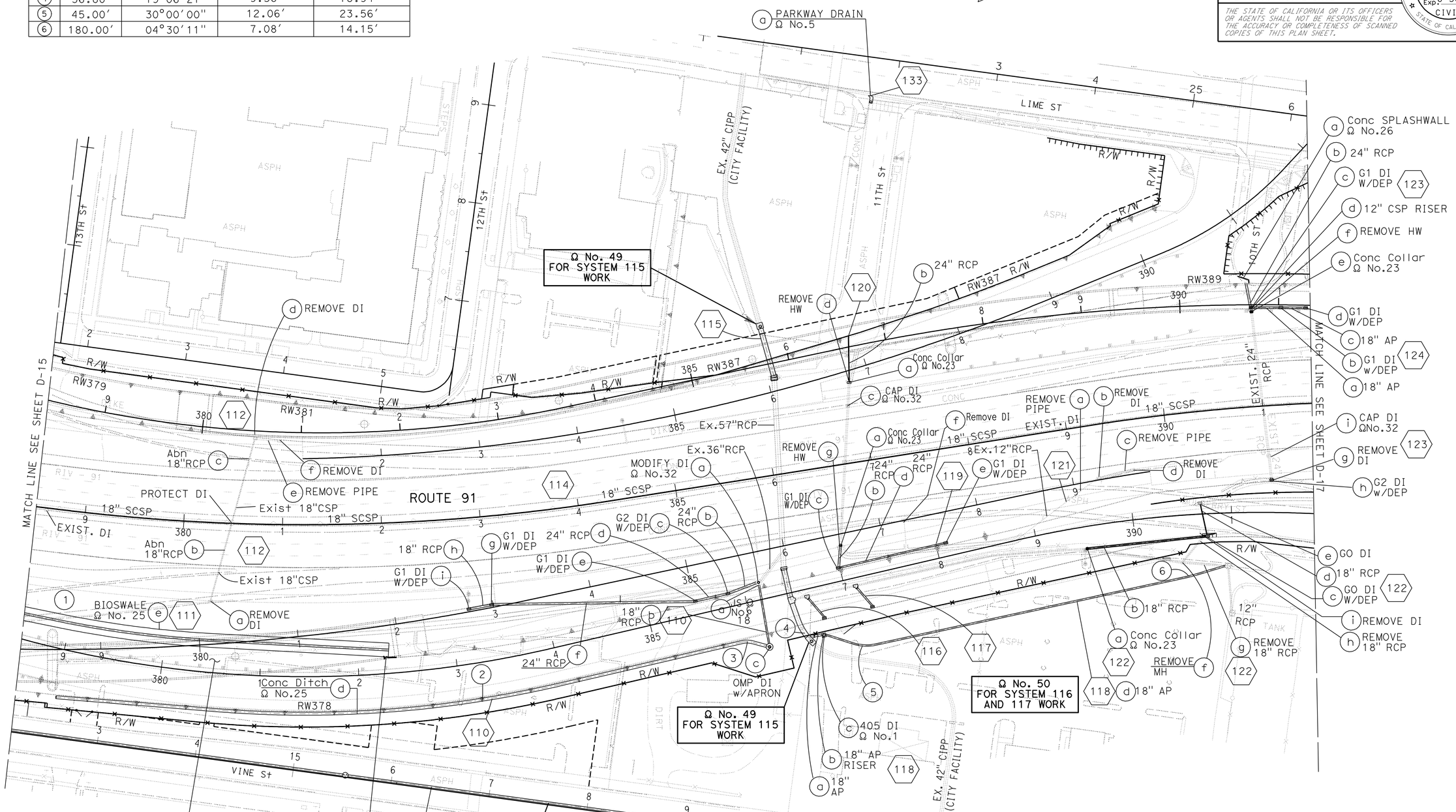

NOTE:

FOR ACCURATE RIGHT OF WAY AND ACCESS DATA, CONTACT RIGHT OF WAY ENGINEERING AT THE DISTRICT OFFICE.

Ω - SEE DRAINAGE DETAIL (DD SHEET).

THIS PLAN ACCURATE FOR DRAINAGE WORK ONLY.

DRAINAGE PLAN

SCALE: 1" = 50′

D-16

STATE OF CALIFORNIA - DEPARTMENT OF TRANSPORTATION

Caltrans DESIGN

FUNCTIONAL SUPERVISOR: MARK PERTILE

CALCULATED-DESIGNED BY: MOHAMMAD ABDRABOH

CHECKED BY: ALAN R. BISI

REVISED BY / DATE REVISED

LAST REVISION 03-29-11 DATE PLOTTED => 29-APR-2011 TIME PLOTTED => 17:32

BORDER LAST REVISED 4/11/2008 | RELATIVE BORDER SCALE IS IN INCHES 0 1 2 3 | USERNAME => trphils DGN FILE => 844840ia016.dgn | CU 08227 | EA 448401

Dist	COUNTY	ROUTE	POST MILES TOTAL PROJECT	SHEET No.	TOTAL SHEETS
08	Riv	91	15.6/21.6	237	2028

REGISTERED CIVIL ENGINEER 3-29-10 DATE

4-25-11
PLANS APPROVAL DATE

REGISTERED PROFESSIONAL ENGINEER ALAN R. BISI No. C62808 Exp. 6-30-12 CIVIL STATE OF CALIFORNIA

THE STATE OF CALIFORNIA OR ITS OFFICERS OR AGENTS SHALL NOT BE RESPONSIBLE FOR THE ACCURACY OR COMPLETENESS OF SCANNED COPIES OF THIS PLAN SHEET.

NOTE:

FOR ACCURATE RIGHT OF WAY AND ACCESS DATA,
CONTACT RIGHT OF WAY ENGINEERING AT THE DISTRICT OFFICE.

Ω - SEE DRAINAGE DETAIL (DD SHEET).

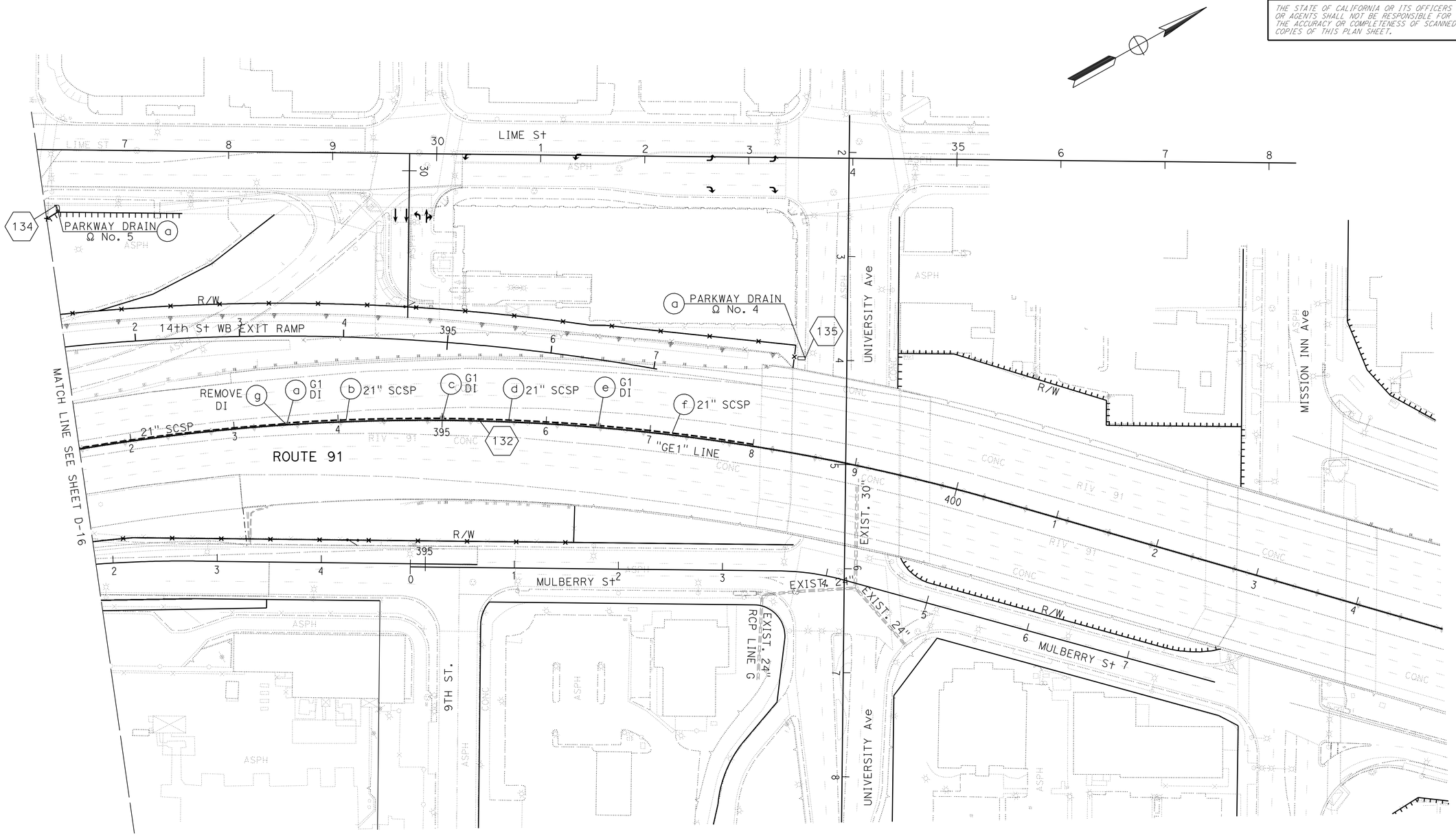

DRAINAGE PLAN

SCALE: 1" = 50'

D-17

THIS PLAN ACCURATE FOR DRAINAGE WORK ONLY.

STATE OF CALIFORNIA - DEPARTMENT OF TRANSPORTATION
Caltrans DESIGN

FUNCTIONAL SUPERVISOR: MARK PERTILE
CALCULATED-DESIGNED BY: MOHAMMAD ABDRABOH
CHECKED BY: ALAN R. BISI
REVISED BY
DATE REVISED

LAST REVISION 03-29-11
DATE PLOTTED => 29-APR-2011
TIME PLOTTED => 17:32

Dist	COUNTY	ROUTE	POST MILES TOTAL PROJECT	SHEET No.	TOTAL SHEETS
08	Riv	91	15.6/21.6	238	2028

REGISTERED CIVIL ENGINEER 3-29-10 DATE

4-25-11
PLANS APPROVAL DATE

REGISTERED PROFESSIONAL ENGINEER ALAN R. BISI No. C62808 Exp. 6-30-12 CIVIL STATE OF CALIFORNIA

THE STATE OF CALIFORNIA OR ITS OFFICERS OR AGENTS SHALL NOT BE RESPONSIBLE FOR THE ACCURACY OR COMPLETENESS OF SCANNED COPIES OF THIS PLAN SHEET.

NOTE:

1. FOR ACCURATE RIGHT OF WAY AND ACCESS DATA, CONTACT RIGHT OF WAY ENGINEERING AT THE DISTRICT OFFICE.
2. CONTRACTOR TO CLEAN AND MAINTAIN FUNCTION OF EXISTING RAILROAD CULVERT DURING CONSTRUCTION TO THE SATISFACTION OF THE ENGINEER.
3. SPILLWAY SHALL BE CONSTRUCTED OF MINOR CONCRETE.
4. Ω - SEE DRAINAGE DETAIL (DD SHEET).

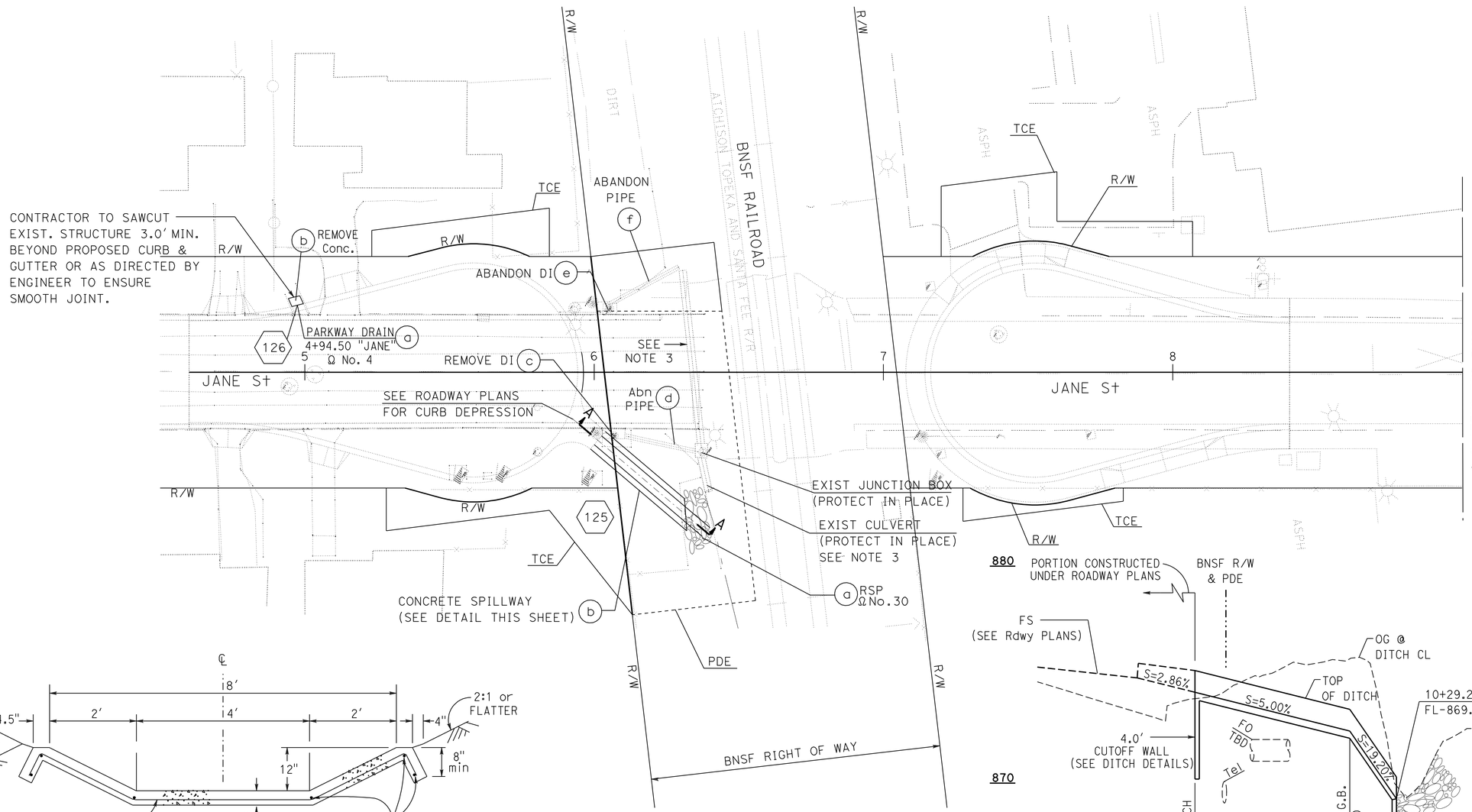

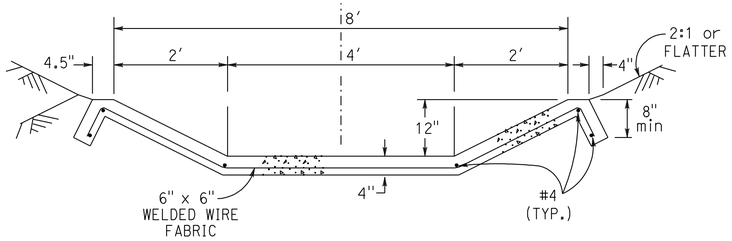

SPILLWAY TYPICAL SECTION
NO SCALE

DRAINAGE PLAN

SCALE: 1" = 20'

D-18

THIS PLAN ACCURATE FOR DRAINAGE WORK ONLY.

STATE OF CALIFORNIA - DEPARTMENT OF TRANSPORTATION
Caltrans DESIGN
FUNCTIONAL SUPERVISOR: MARK PERTILE
CALCULATED-DESIGNED BY: MOHAMMAD ABDRABOH
CHECKED BY: ALAN R. BISI
REVISED BY / DATE REVISED

LAST REVISION 03-29-11 | DATE PLOTTED => 29-APR-2011 | TIME PLOTTED => 17:32

Dist	COUNTY	ROUTE	POST MILES TOTAL PROJECT	SHEET No.	TOTAL SHEETS
08	Riv	91	15.6/21.6	239	2028

REGISTERED CIVIL ENGINEER 3-29-10 DATE

4-25-11
PLANS APPROVAL DATE

REGISTERED PROFESSIONAL ENGINEER ALAN R. BISI No. C62808 Exp. 6-30-12 CIVIL STATE OF CALIFORNIA

THE STATE OF CALIFORNIA OR ITS OFFICERS OR AGENTS SHALL NOT BE RESPONSIBLE FOR THE ACCURACY OR COMPLETENESS OF SCANNED COPIES OF THIS PLAN SHEET.

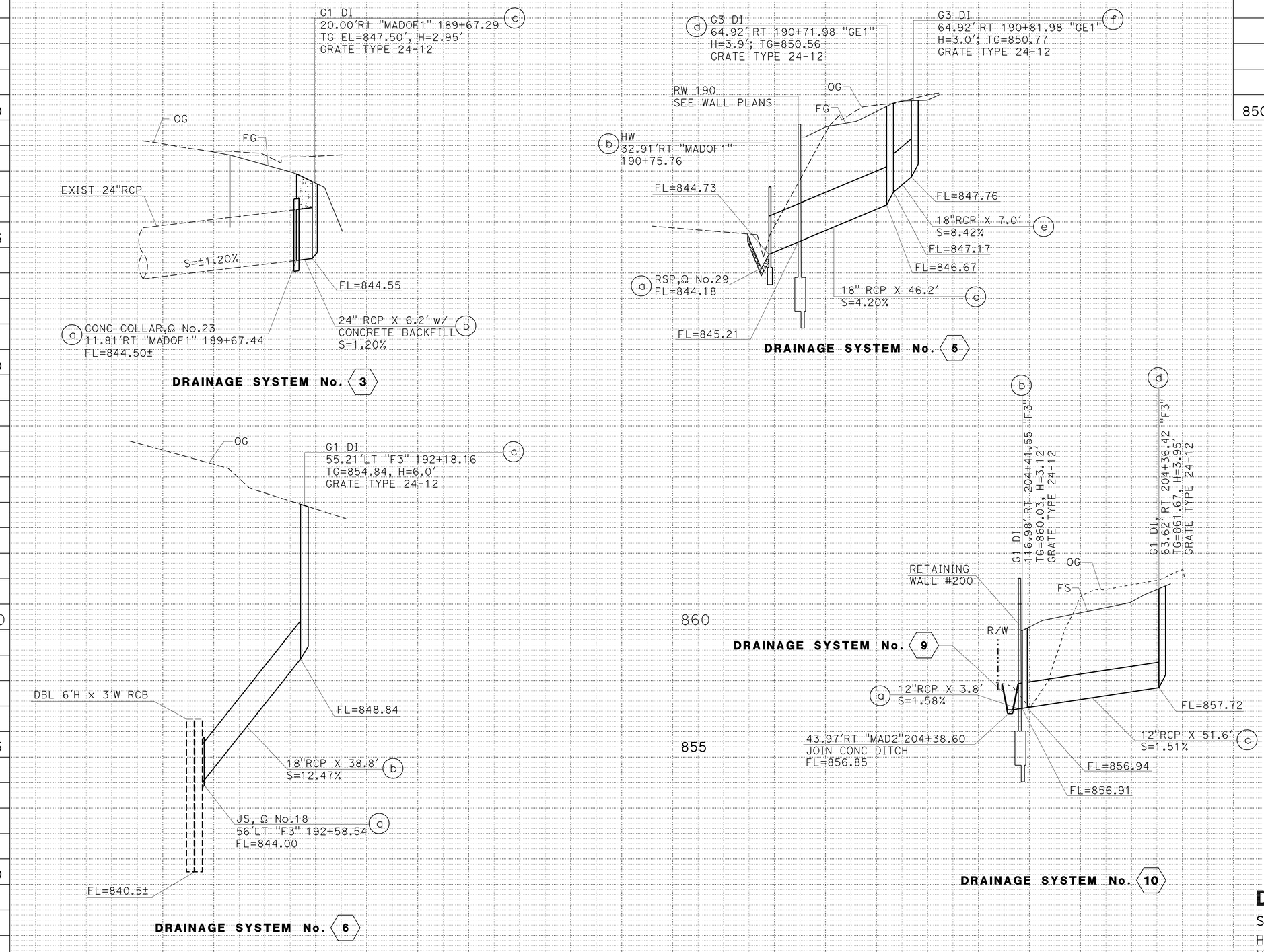

DRAINAGE PROFILES

SCALE: (EXCEPT AS SHOWN)
H - 1"=20'
V - 1"=2'

DP-1

THIS PLAN ACCURATE FOR DRAINAGE WORK ONLY.

STATION		
CY	Exc	
	Emb	

TOTAL

STATE OF CALIFORNIA - DEPARTMENT OF TRANSPORTATION
Caltrans® DESIGN

FUNCTIONAL SUPERVISOR: MARK PERTILE
CALCULATED-DESIGNED BY: MOHAMMAD ABDRABOH
CHECKED BY: ALAN R. BISI
REVISED BY / DATE REVISED

LAST REVISION 03-29-11 | DATE PLOTTED => 29-APR-2011 | TIME PLOTTED => 16:47

BORDER LAST REVISED 4/11/2008 | RELATIVE BORDER SCALE IS IN INCHES 0 1 2 3 | USERNAME => trstrk | DGN FILE => 844840ib001.dgn | CU 08227 | EA 448401

Dist	COUNTY	ROUTE	POST MILES TOTAL PROJECT	SHEET No.	TOTAL SHEETS
08	Riv	91	15.6/21.6	240	2028

REGISTERED CIVIL ENGINEER 3-29-10 DATE

4-25-11
PLANS APPROVAL DATE

REGISTERED PROFESSIONAL ENGINEER ALAN R. BISI No. C62808 Exp. 6-30-12 CIVIL STATE OF CALIFORNIA

THE STATE OF CALIFORNIA OR ITS OFFICERS OR AGENTS SHALL NOT BE RESPONSIBLE FOR THE ACCURACY OR COMPLETENESS OF SCANNED COPIES OF THIS PLAN SHEET.

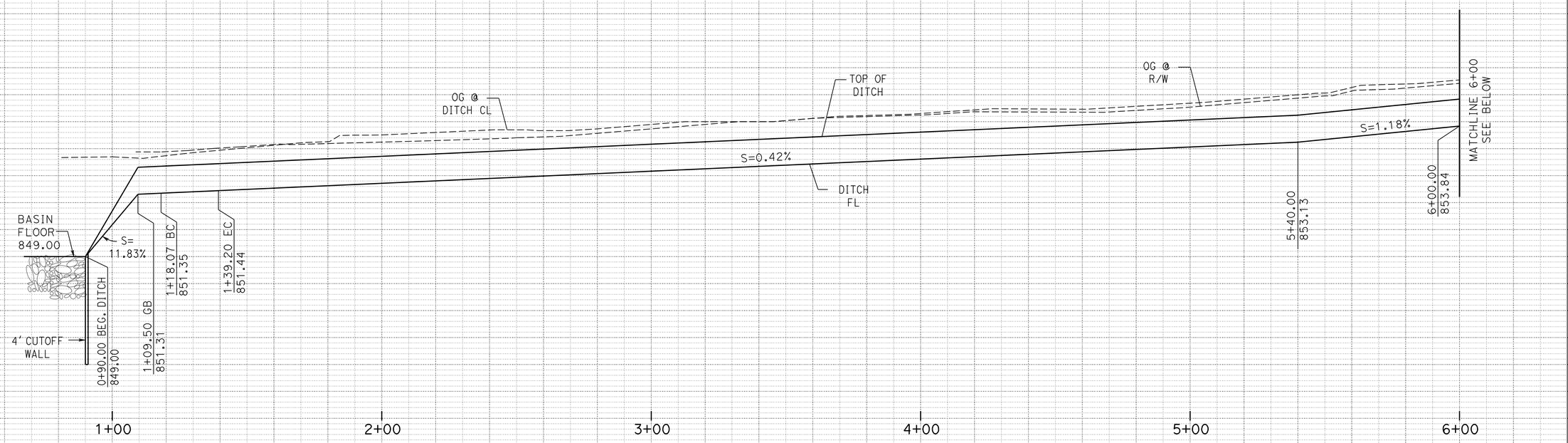

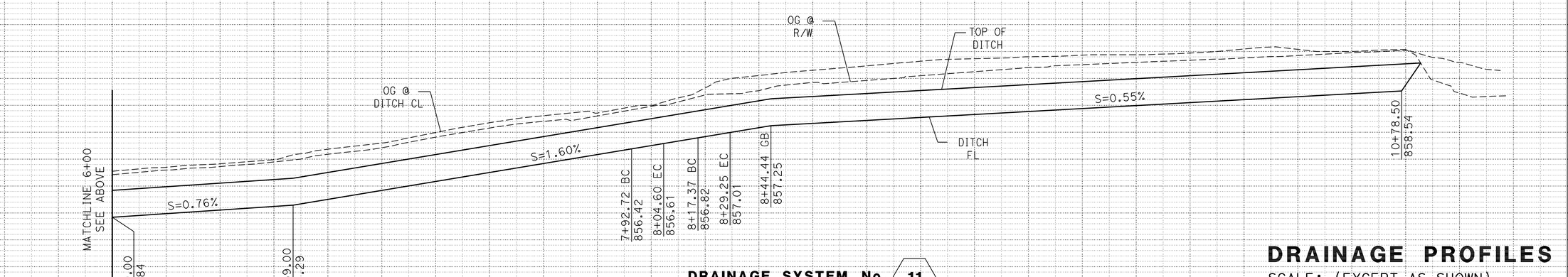

DRAINAGE SYSTEM No. 11

THIS PLAN ACCURATE FOR DRAINAGE WORK ONLY.

DRAINAGE PROFILES

SCALE: (EXCEPT AS SHOWN)
H - 1"=20'
V - 1"=2'

DP-2

STATION	6+00	7+00	8+00	9+00	10+00	11+00	TOTAL
CY Exc							
CY Emb							

STATE OF CALIFORNIA - DEPARTMENT OF TRANSPORTATION
Caltrans® DESIGN

FUNCTIONAL SUPERVISOR: MARK PERTILE
CALCULATED-DESIGNED BY: MOHAMMAD ABDRABOH
CHECKED BY: ALAN R. BISI
REVISED BY / DATE REVISED

LAST REVISION 03-29-11 DATE PLOTTED => 29-APR-2011 TIME PLOTTED => 16:47

Dist	COUNTY	ROUTE	POST MILES TOTAL PROJECT	SHEET No.	TOTAL SHEETS
08	Riv	91	15.6/21.6	241	2028

REGISTERED CIVIL ENGINEER 12-1-10 DATE

4-25-11
PLANS APPROVAL DATE

REGISTERED PROFESSIONAL ENGINEER ALAN R. BISI No. C62808 Exp. 6-30-12 CIVIL STATE OF CALIFORNIA

THE STATE OF CALIFORNIA OR ITS OFFICERS OR AGENTS SHALL NOT BE RESPONSIBLE FOR THE ACCURACY OR COMPLETENESS OF SCANNED COPIES OF THIS PLAN SHEET.

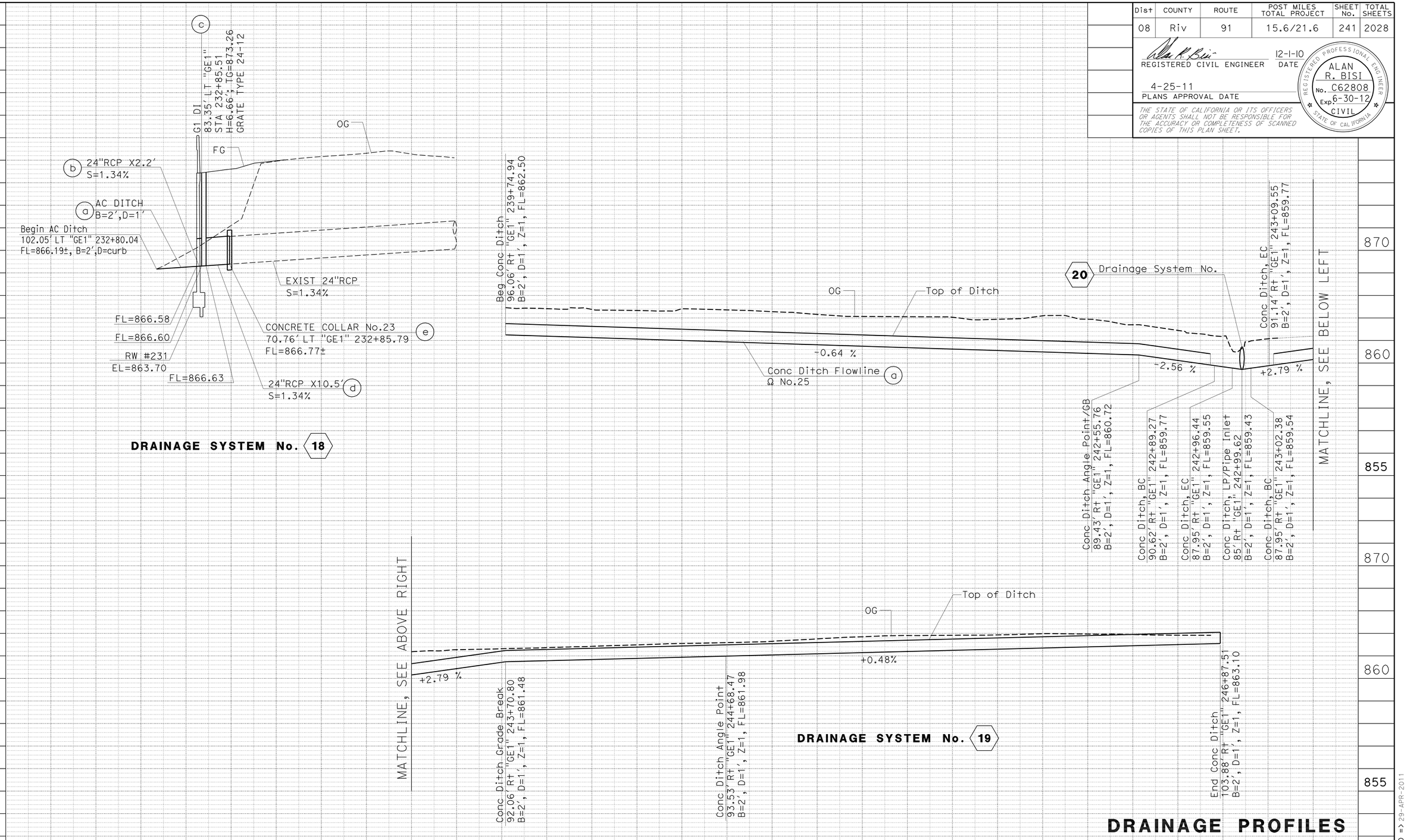

DRAINAGE PROFILES

SCALE: (EXCEPT AS SHOWN)
H - 1"=20'
V - 1"=2'

THIS PLAN ACCURATE FOR DRAINAGE WORK ONLY.

DP-3

STATION		TOTAL
CY	Exc	
	Emb	

STATE OF CALIFORNIA - DEPARTMENT OF TRANSPORTATION
Caltrans® DESIGN

FUNCTIONAL SUPERVISOR: MARK PERTILE
CALCULATED-DESIGNED BY: MOHAMMAD ABDRABOH
CHECKED BY: ALAN R. BISI
REVISED BY / DATE REVISED

LAST REVISION 12-01-10 | DATE PLOTTED => 29-APR-2011 | TIME PLOTTED => 16:47

Dist	COUNTY	ROUTE	POST MILES TOTAL PROJECT	SHEET No.	TOTAL SHEETS
08	Riv	91	15.6/21.6	242	2028

REGISTERED CIVIL ENGINEER 3-29-10 DATE

4-25-11
PLANS APPROVAL DATE

REGISTERED PROFESSIONAL ENGINEER ALAN R. BISI No. C62808 Exp. 6-30-12 CIVIL STATE OF CALIFORNIA

THE STATE OF CALIFORNIA OR ITS OFFICERS OR AGENTS SHALL NOT BE RESPONSIBLE FOR THE ACCURACY OR COMPLETENESS OF SCANNED COPIES OF THIS PLAN SHEET.

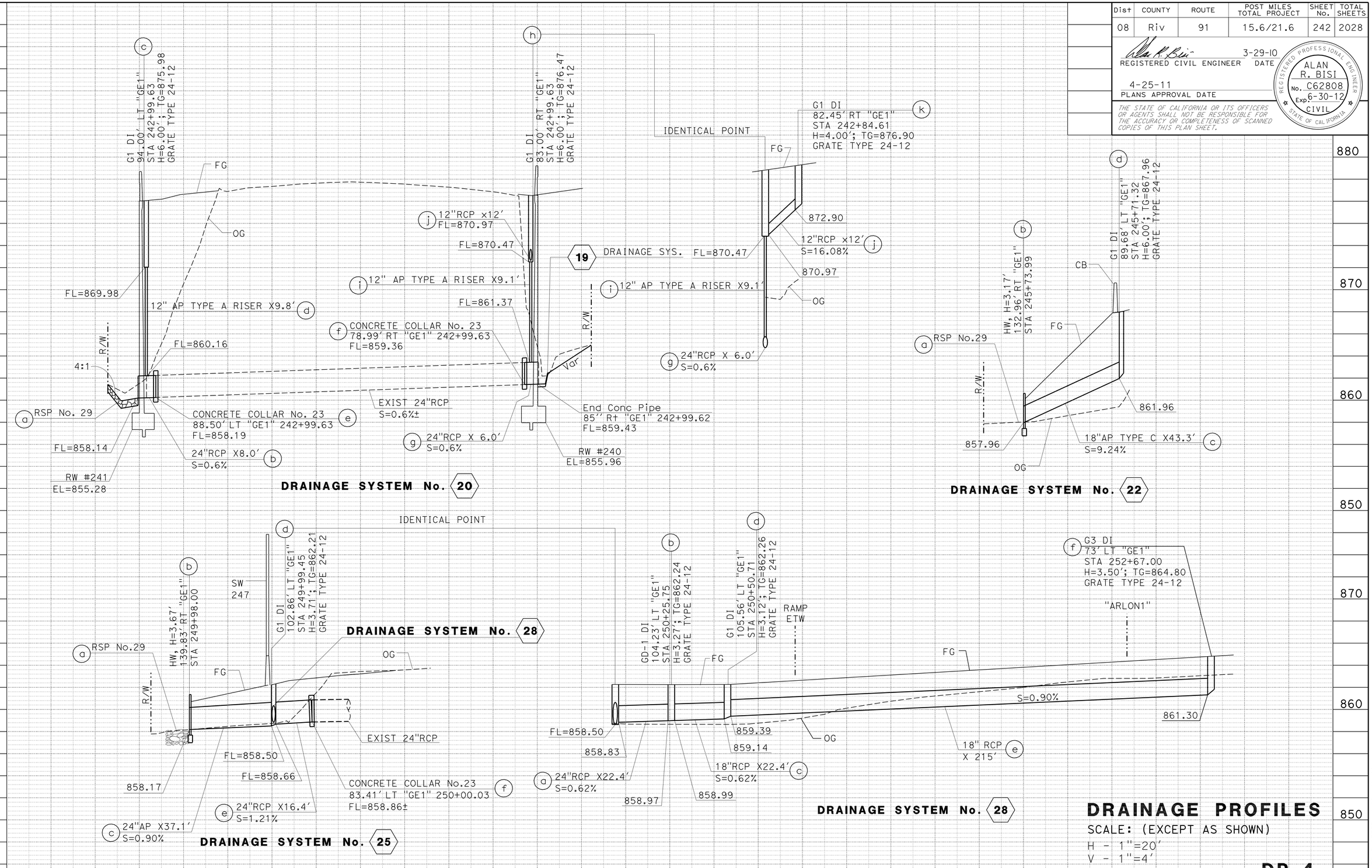

DRAINAGE PROFILES

SCALE: (EXCEPT AS SHOWN)
H - 1"=20'
V - 1"=4'

DP-4

THIS PLAN ACCURATE FOR DRAINAGE WORK ONLY.

STATION		TOTAL
CY	Exc	
	Emb	

REVISED BY | DATE REVISED
MOHAMMAD ABDRABOH | ALAN R. BISI
CALCULATED-DESIGNED BY | CHECKED BY
FUNCTIONAL SUPERVISOR: MARK PERTILE

STATE OF CALIFORNIA - DEPARTMENT OF TRANSPORTATION
Caltrans® DESIGN

LAST REVISION 03-29-11 DATE PLOTTED => 29-APR-2011 TIME PLOTTED => 16:47

Dist	COUNTY	ROUTE	POST MILES TOTAL PROJECT	SHEET No.	TOTAL SHEETS
08	Riv	91	15.6/21.6	243	2028

REGISTERED CIVIL ENGINEER 3-29-10 DATE

4-25-11
PLANS APPROVAL DATE

REGISTERED PROFESSIONAL ENGINEER ALAN R. BISI No. C62808 Exp. 6-30-12 CIVIL STATE OF CALIFORNIA

THE STATE OF CALIFORNIA OR ITS OFFICERS OR AGENTS SHALL NOT BE RESPONSIBLE FOR THE ACCURACY OR COMPLETENESS OF SCANNED COPIES OF THIS PLAN SHEET.

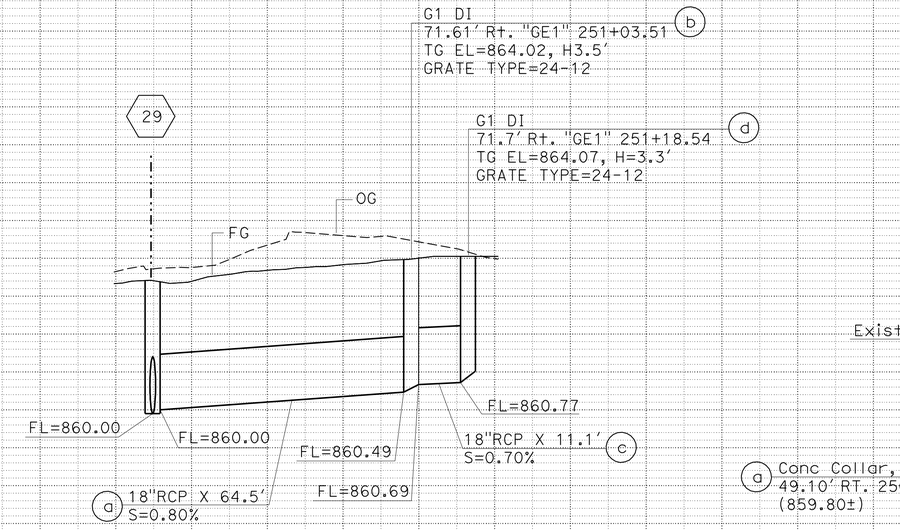

DRAINAGE SYSTEM No. 26

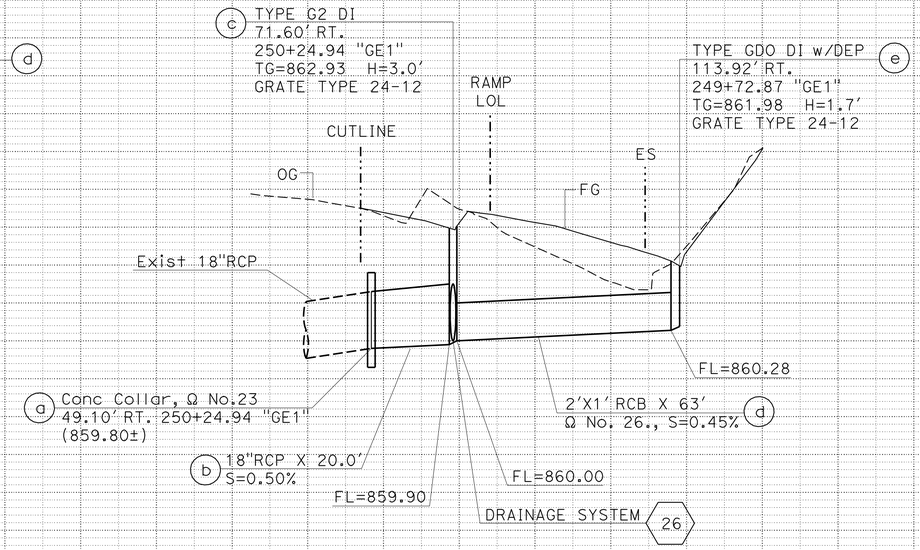

DRAINAGE SYSTEM No. 29

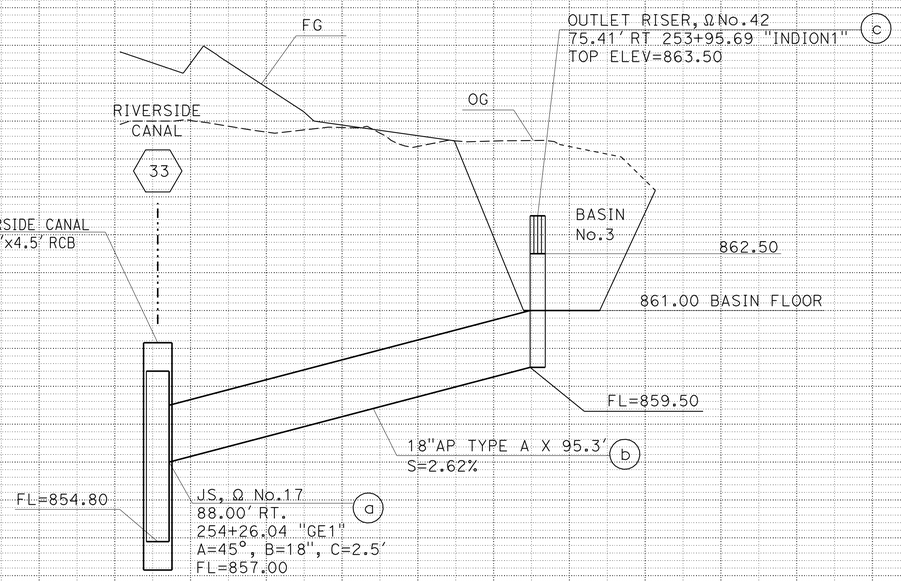

DRAINAGE SYSTEM No. 31

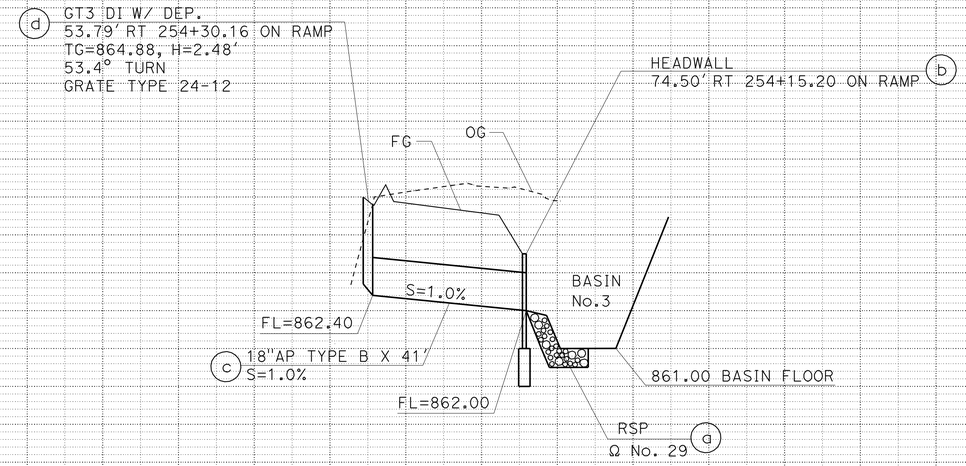

DRAINAGE SYSTEM No. 32

THIS PLAN ACCURATE FOR DRAINAGE WORK ONLY.

ALL DIMENSIONS ARE
FEET UNLESS OTHERWISE SHOWN

DRAINAGE PROFILE

SCALE: (EXCEPT AS SHOWN)
H - 1"=20'
V - 1"=2'

DP-5

STATION		TOTAL
CY	Exc	
	Emb	

STATE OF CALIFORNIA - DEPARTMENT OF TRANSPORTATION
Caltrans DESIGN

FUNCTIONAL SUPERVISOR: MARK PERTILE
CALCULATED-DESIGNED BY: MOHAMMAD ABDRABOH
CHECKED BY: ALAN R. BISI
REVISED BY / DATE REVISED

LAST REVISION 03-29-11
DATE PLOTTED => 29-APR-2011
TIME PLOTTED => 16:47

Dist	COUNTY	ROUTE	POST MILES TOTAL PROJECT	SHEET No.	TOTAL SHEETS
08	Riv	91	15.6/21.6	244	2028

REGISTERED CIVIL ENGINEER 3-29-10 DATE

4-25-11
PLANS APPROVAL DATE

REGISTERED PROFESSIONAL ENGINEER ALAN R. BISI No. C62808 Exp. 6-30-12 CIVIL STATE OF CALIFORNIA

THE STATE OF CALIFORNIA OR ITS OFFICERS OR AGENTS SHALL NOT BE RESPONSIBLE FOR THE ACCURACY OR COMPLETENESS OF SCANNED COPIES OF THIS PLAN SHEET.

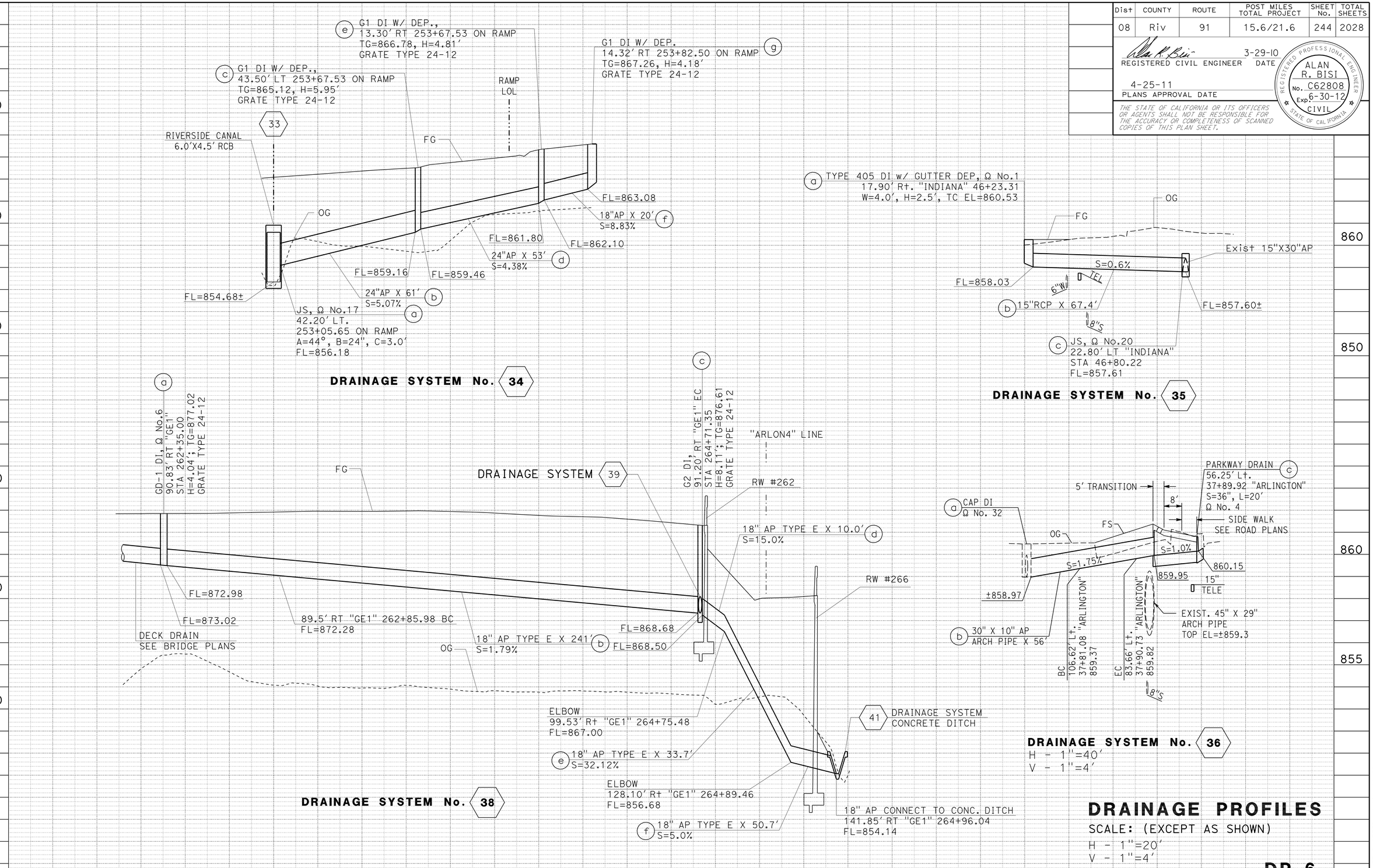

THIS PLAN ACCURATE FOR DRAINAGE WORK ONLY.

STATION		TOTAL
CY	Exc	
	Emb	

STATE OF CALIFORNIA - DEPARTMENT OF TRANSPORTATION
Caltrans DESIGN

FUNCTIONAL SUPERVISOR: MARK PERTILE
CALCULATED-DESIGNED BY: MOHAMMAD ABDRABOH
CHECKED BY: ALAN R. BISI
REVISED BY / DATE REVISED

LAST REVISION 03-29-11
DATE PLOTTED => 29-APR-2011
TIME PLOTTED => 16:47

Dist	COUNTY	ROUTE	POST MILES TOTAL PROJECT	SHEET No.	TOTAL SHEETS
08	Riv	91	15.6/21.6	245	2028

REGISTERED CIVIL ENGINEER 12-1-10 DATE

4-25-11
PLANS APPROVAL DATE

REGISTERED PROFESSIONAL ENGINEER ALAN R. BISI No. C62808 Exp. 6-30-12 CIVIL STATE OF CALIFORNIA

THE STATE OF CALIFORNIA OR ITS OFFICERS OR AGENTS SHALL NOT BE RESPONSIBLE FOR THE ACCURACY OR COMPLETENESS OF SCANNED COPIES OF THIS PLAN SHEET.

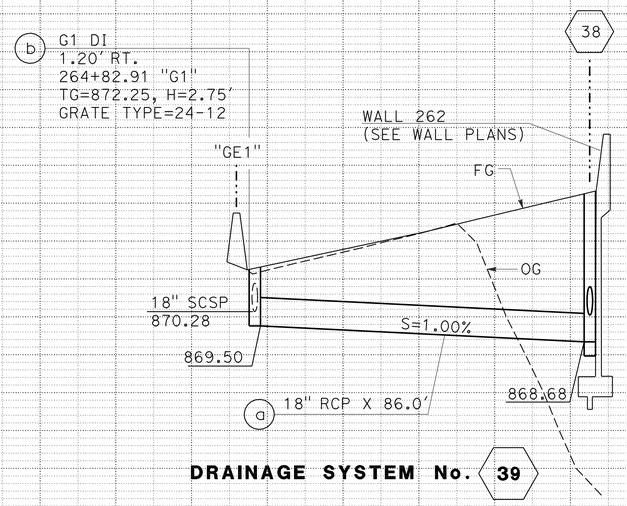

DRAINAGE SYSTEM No. 39

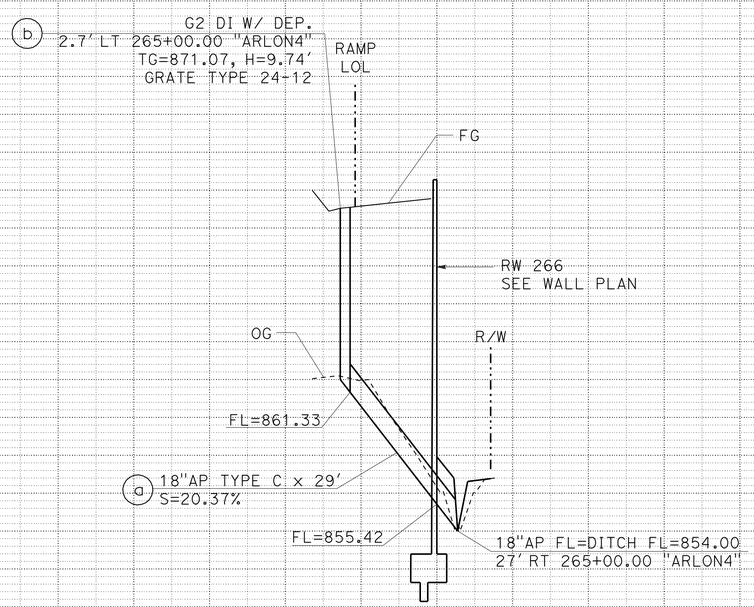

DRAINAGE SYSTEM No. 41

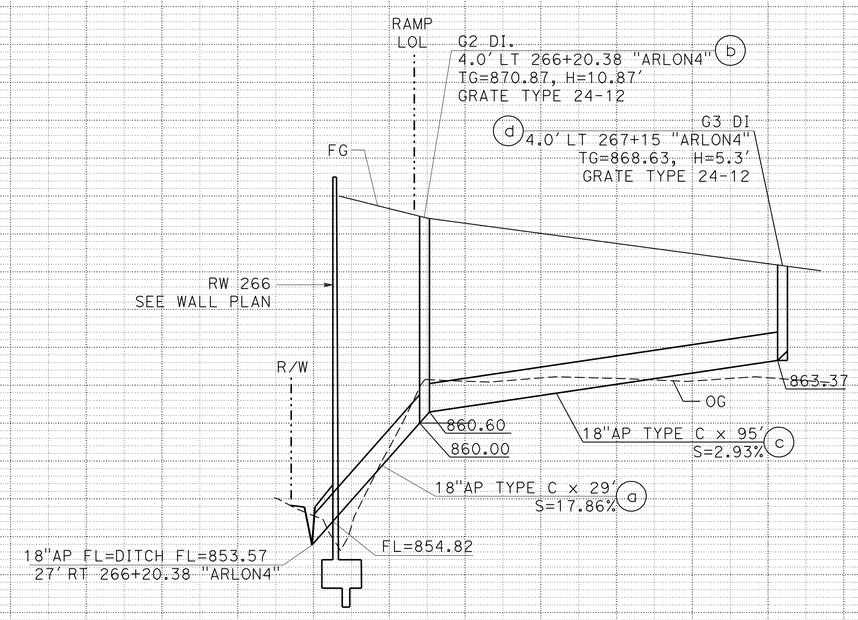

DRAINAGE SYSTEM No. 42

DRAINAGE PROFILES

SCALE: (EXCEPT AS SHOWN)
H - 1"=20'
V - 1"=4'

DP-7

THIS PLAN ACCURATE FOR DRAINAGE WORK ONLY.

STATION		TOTAL
CY	Exc	
	Emb	

STATE OF CALIFORNIA - DEPARTMENT OF TRANSPORTATION
Caltrans® DESIGN
FUNCTIONAL SUPERVISOR: MARK PERTILE
CALCULATED-DESIGNED BY: MOHAMMAD ABDRABOH
CHECKED BY: ALAN R. BISI
REVISED BY / DATE REVISED

LAST REVISION DATE PLOTTED => 29-APR-2011
TIME PLOTTED => 16:47
12-01-10

Dist	COUNTY	ROUTE	POST MILES TOTAL PROJECT	SHEET No.	TOTAL SHEETS
08	Riv	91	15.6/21.6	246	2028

REGISTERED CIVIL ENGINEER 3-29-10 DATE

4-25-11
PLANS APPROVAL DATE

REGISTERED PROFESSIONAL ENGINEER ALAN R. BISI No. C62808 Exp. 6-30-12 CIVIL STATE OF CALIFORNIA

THE STATE OF CALIFORNIA OR ITS OFFICERS OR AGENTS SHALL NOT BE RESPONSIBLE FOR THE ACCURACY OR COMPLETENESS OF SCANNED COPIES OF THIS PLAN SHEET.

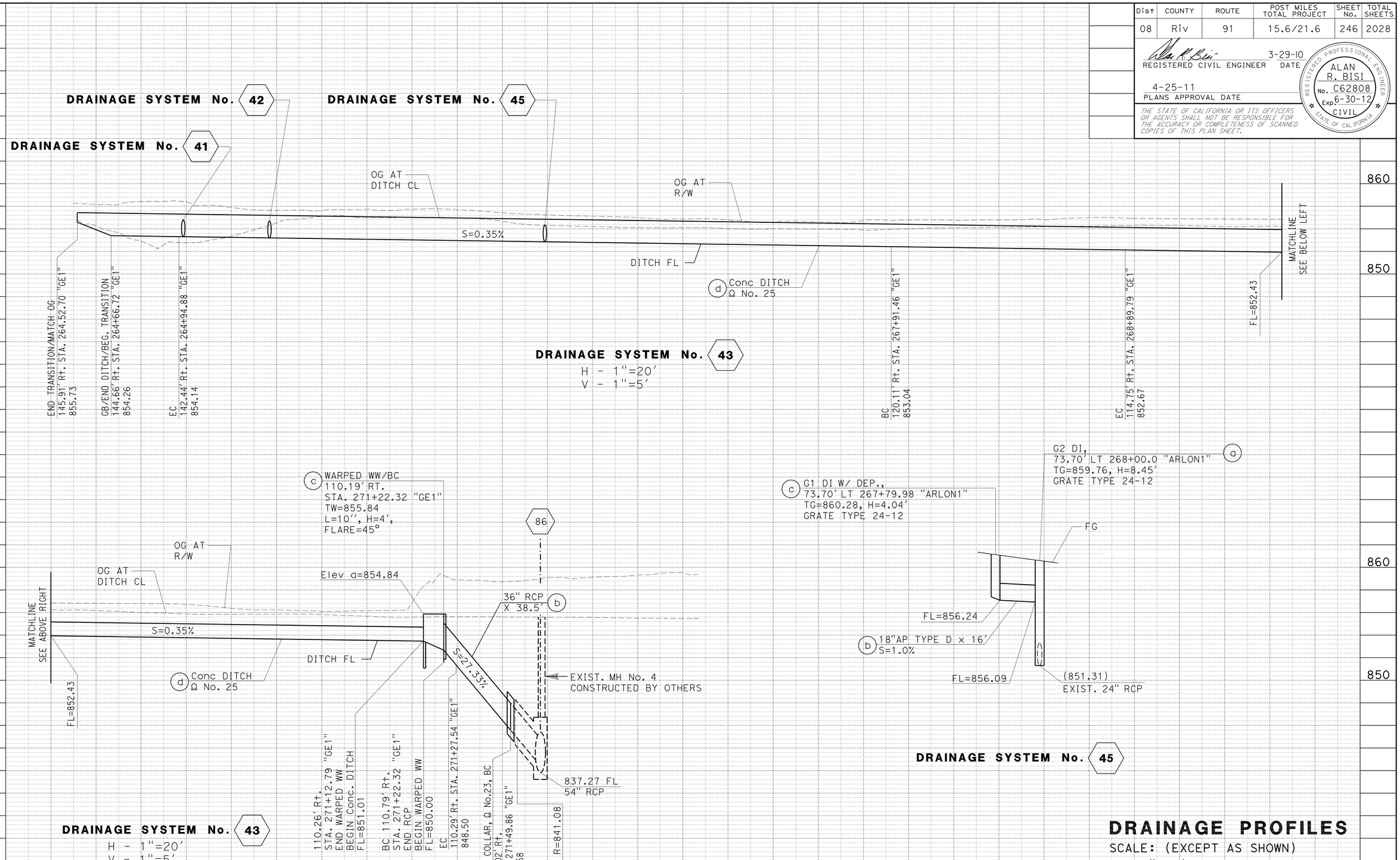

DRAINAGE PROFILES

SCALE: (EXCEPT AS SHOWN)
H - 1"=20'
V - 1"=4'

DP-8

STATION		TOTAL
CY	Exc	
	Emb	

STATE OF CALIFORNIA - DEPARTMENT OF TRANSPORTATION
Caltrans DESIGN
FUNCTIONAL SUPERVISOR: MARK PERTILE
CALCULATED-DESIGNED BY: MOHAMMAD ABDRABOH
CHECKED BY: ALAN R. BISI
REVISED BY / DATE REVISED

LAST REVISION 03-29-11 DATE PLOTTED => 29-APR-2011 TIME PLOTTED => 16:47

Dist	COUNTY	ROUTE	POST MILES TOTAL PROJECT	SHEET No.	TOTAL SHEETS
08	Riv	91	15.6/21.6	247	2028

REGISTERED CIVIL ENGINEER 3-29-10 DATE

4-25-11
PLANS APPROVAL DATE

REGISTERED PROFESSIONAL ENGINEER ALAN R. BISI No. C62808 Exp. 6-30-12 CIVIL STATE OF CALIFORNIA

THE STATE OF CALIFORNIA OR ITS OFFICERS OR AGENTS SHALL NOT BE RESPONSIBLE FOR THE ACCURACY OR COMPLETENESS OF SCANNED COPIES OF THIS PLAN SHEET.

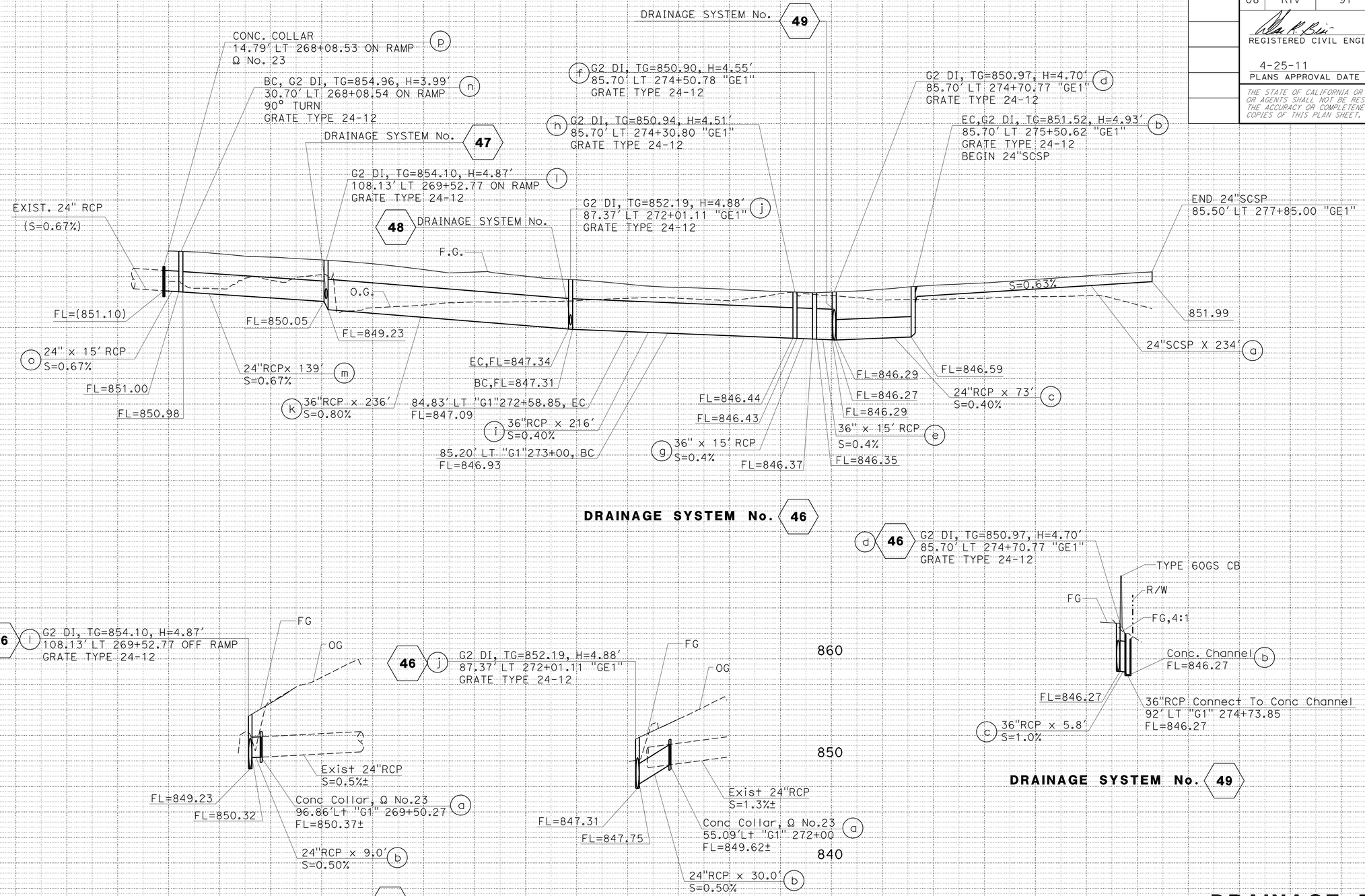

THIS PLAN ACCURATE FOR DRAINAGE WORK ONLY.

DRAINAGE PROFILES

SCALE: (EXCEPT AS SHOWN)
H - 1"=50'
V - 1"=5'

DP-9

STATION		TOTAL
CY	Exc	
	Emb	

STATE OF CALIFORNIA - DEPARTMENT OF TRANSPORTATION
Caltrans DESIGN
FUNCTIONAL SUPERVISOR: MARK PERTILE
CALCULATED-DESIGNED BY: ALAN R. BISI
CHECKED BY: MOHAMMAD ABDRABOH
REVISED BY / DATE REVISED

LAST REVISION 03-29-11 DATE PLOTTED => 29-APR-2011 TIME PLOTTED => 16:47

Dist	COUNTY	ROUTE	POST MILES TOTAL PROJECT	SHEET No.	TOTAL SHEETS
08	Riv	91	15.6/21.6	248	2028

REGISTERED CIVIL ENGINEER 12-1-10 DATE

4-25-11
PLANS APPROVAL DATE

REGISTERED PROFESSIONAL ENGINEER ALAN R. BISI No. C62808 Exp. 6-30-12 CIVIL STATE OF CALIFORNIA

THE STATE OF CALIFORNIA OR ITS OFFICERS OR AGENTS SHALL NOT BE RESPONSIBLE FOR THE ACCURACY OR COMPLETENESS OF SCANNED COPIES OF THIS PLAN SHEET.

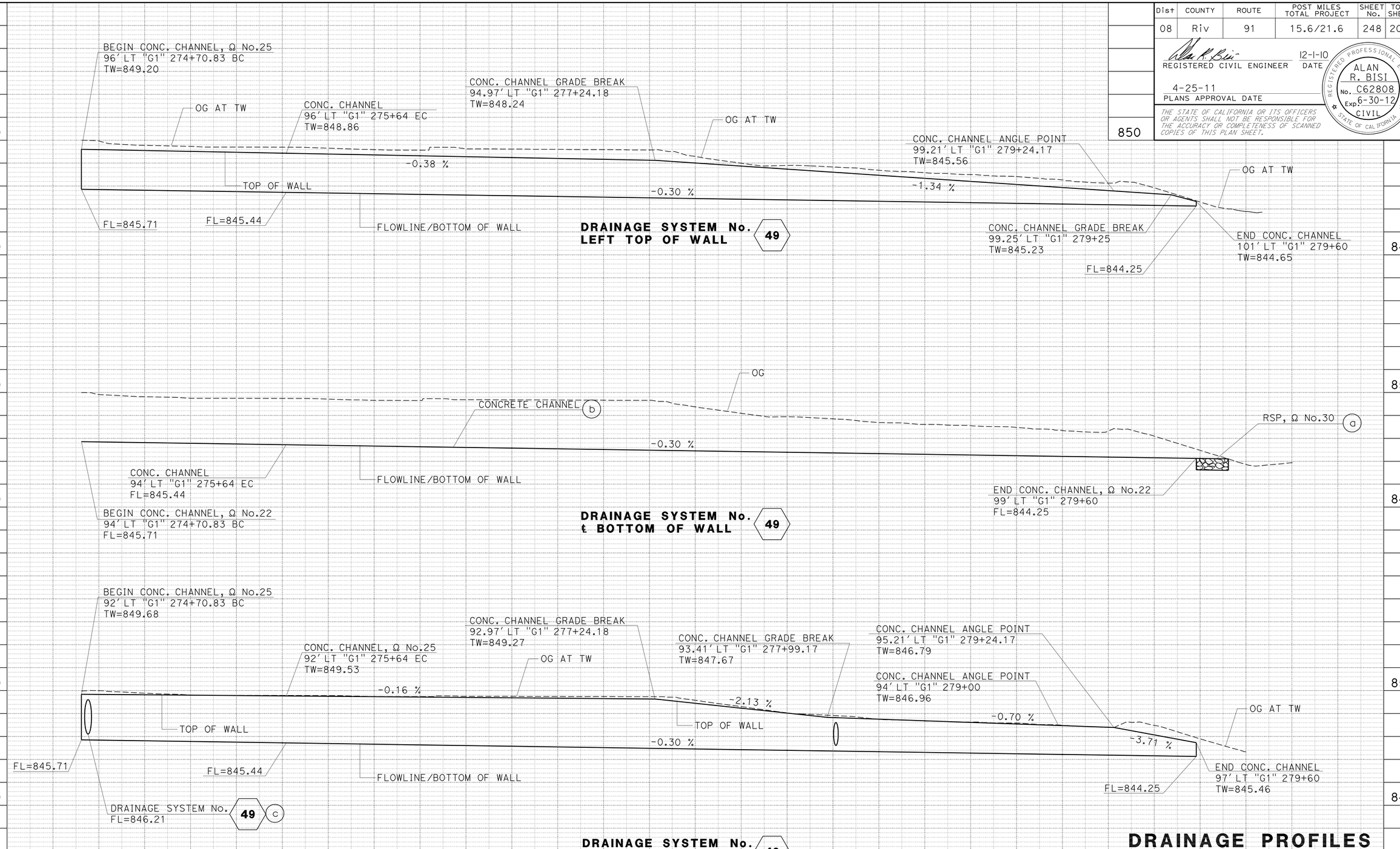

DRAINAGE PROFILES

SCALE: (EXCEPT AS SHOWN)
H - 1"=20'
V - 1"=4'

THIS PLAN ACCURATE FOR DRAINAGE WORK ONLY.

DP-10

STATION		TOTAL
CY	Exc	
	Emb	

REVISED BY | DATE REVISED
MOHAMMAD ABDRABOH | ALAN R. BISI
CALCULATED-DESIGNED BY | CHECKED BY
FUNCTIONAL SUPERVISOR: MARK PERTILE

STATE OF CALIFORNIA - DEPARTMENT OF TRANSPORTATION
Caltrans
DESIGN

LAST REVISION | DATE PLOTTED => 29-APR-2011 | TIME PLOTTED => 16:47
12-01-10

Dist	COUNTY	ROUTE	POST MILES TOTAL PROJECT	SHEET No.	TOTAL SHEETS
08	Riv	91	15.6/21.6	249	2028

REGISTERED CIVIL ENGINEER 3-29-10 DATE

4-25-11
PLANS APPROVAL DATE

REGISTERED PROFESSIONAL ENGINEER ALAN R. BISI No. C62808 Exp. 6-30-12 CIVIL STATE OF CALIFORNIA

THE STATE OF CALIFORNIA OR ITS OFFICERS OR AGENTS SHALL NOT BE RESPONSIBLE FOR THE ACCURACY OR COMPLETENESS OF SCANNED COPIES OF THIS PLAN SHEET.

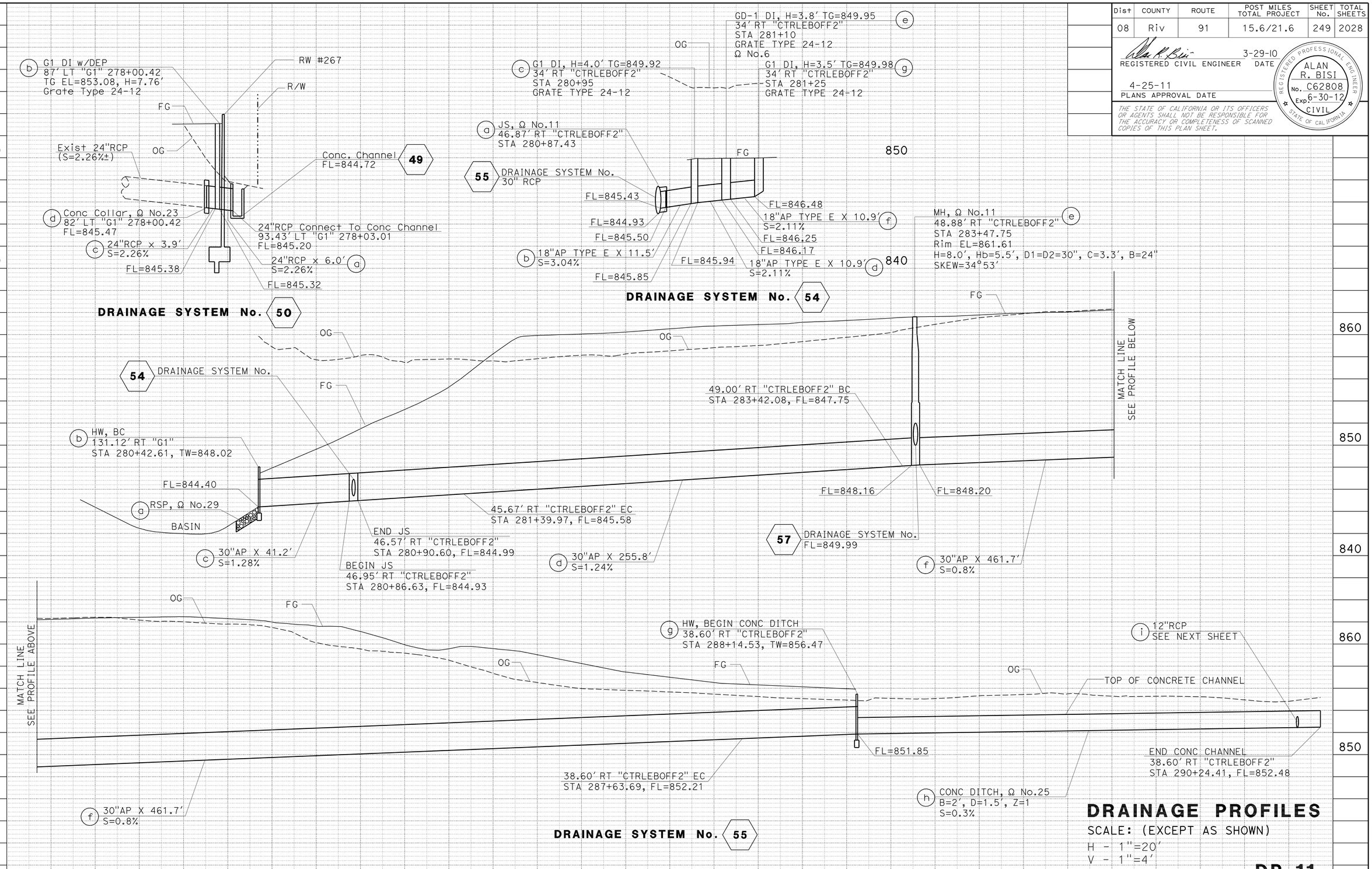

THIS PLAN ACCURATE FOR DRAINAGE WORK ONLY.

DRAINAGE PROFILES

SCALE: (EXCEPT AS SHOWN)
H - 1"=20'
V - 1"=4'

DP-11

STATION		TOTAL
CY	Exc	
	Emb	

STATE OF CALIFORNIA - DEPARTMENT OF TRANSPORTATION
Caltrans® DESIGN
FUNCTIONAL SUPERVISOR: MARK PERTILE
CALCULATED-DESIGNED BY: MOHAMMAD ABDRABOH
CHECKED BY: ALAN R. BISI
REVISED BY / DATE REVISED

LAST REVISION 03-29-11
DATE PLOTTED => 29-APR-2011
TIME PLOTTED => 16:48

Dist	COUNTY	ROUTE	POST MILES TOTAL PROJECT	SHEET No.	TOTAL SHEETS
08	Riv	91	15.6/21.6	250	2028

REGISTERED CIVIL ENGINEER 3-29-10 DATE

4-25-11
PLANS APPROVAL DATE

REGISTERED PROFESSIONAL ENGINEER ALAN R. BISI No. C62808 Exp. 6-30-12 CIVIL STATE OF CALIFORNIA

THE STATE OF CALIFORNIA OR ITS OFFICERS OR AGENTS SHALL NOT BE RESPONSIBLE FOR THE ACCURACY OR COMPLETENESS OF SCANNED COPIES OF THIS PLAN SHEET.

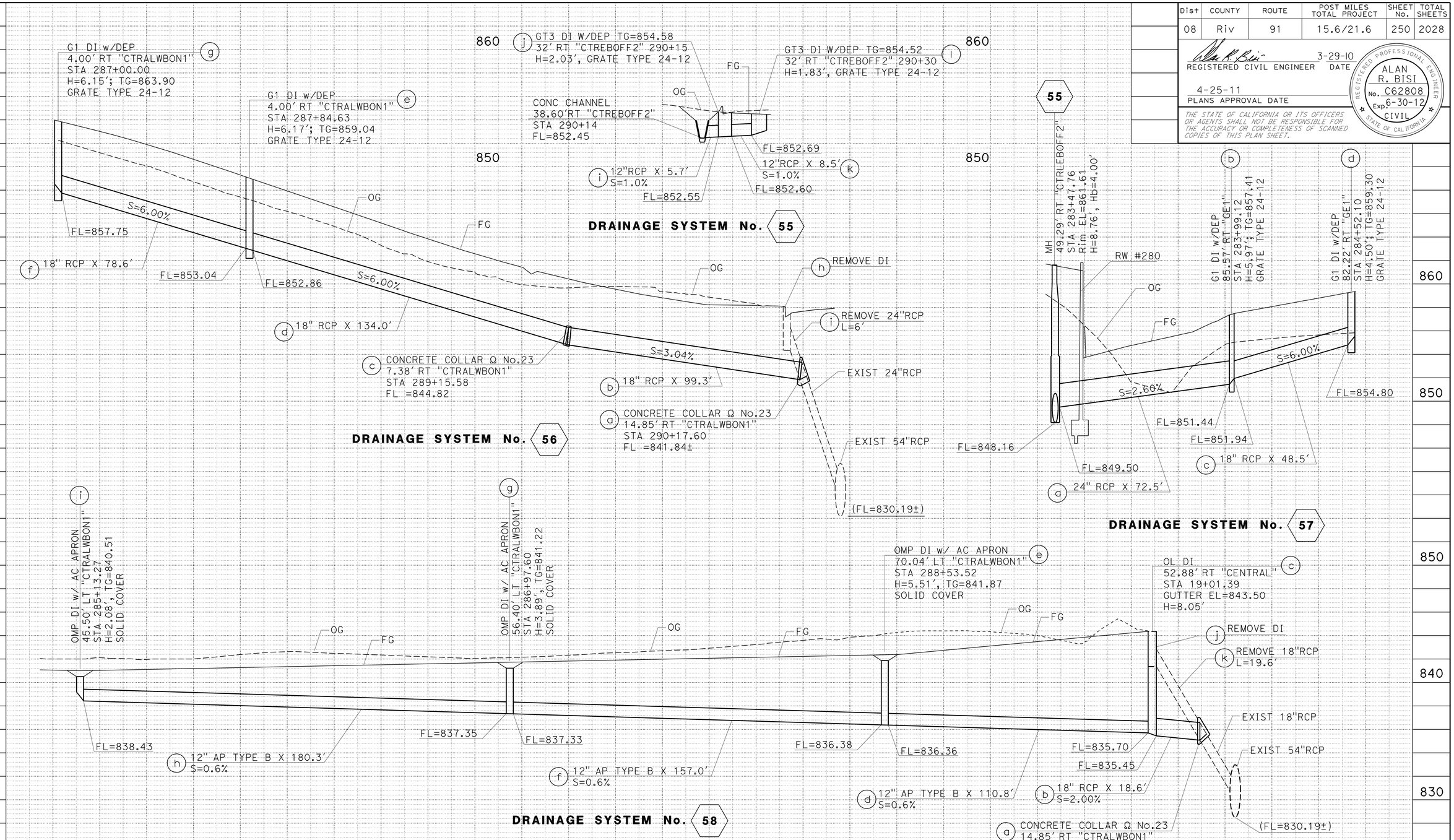

DRAINAGE PROFILES

SCALE: (EXCEPT AS SHOWN)
H - 1"=20'
V - 1"=4'

DP-12

THIS PLAN ACCURATE FOR DRAINAGE WORK ONLY.

STATION		TOTAL
CY	Exc	
	Emb	

STATE OF CALIFORNIA - DEPARTMENT OF TRANSPORTATION
Caltrans® DESIGN

FUNCTIONAL SUPERVISOR: MARK PERTILE
CALCULATED-DESIGNED BY: MOHAMMAD ABDRABOH
CHECKED BY: ALAN R. BISI
REVISED BY / DATE REVISED

LAST REVISION 03-29-11 DATE PLOTTED => 29-APR-2011 TIME PLOTTED => 16:48

BORDER LAST REVISED 4/11/2008 | RELATIVE BORDER SCALE IS IN INCHES 0 1 2 3 | USERNAME => trstrk DGN FILE => 844840ib012.dgn | CU 08227 | EA 448401

Dist	COUNTY	ROUTE	POST MILES TOTAL PROJECT	SHEET No.	TOTAL SHEETS
08	Riv	91	15.6/21.6	251	2028

REGISTERED CIVIL ENGINEER 12-1-10 DATE

4-25-11
PLANS APPROVAL DATE

REGISTERED PROFESSIONAL ENGINEER ALAN R. BISI No. C62808 Exp. 6-30-12 CIVIL STATE OF CALIFORNIA

THE STATE OF CALIFORNIA OR ITS OFFICERS OR AGENTS SHALL NOT BE RESPONSIBLE FOR THE ACCURACY OR COMPLETENESS OF SCANNED COPIES OF THIS PLAN SHEET.

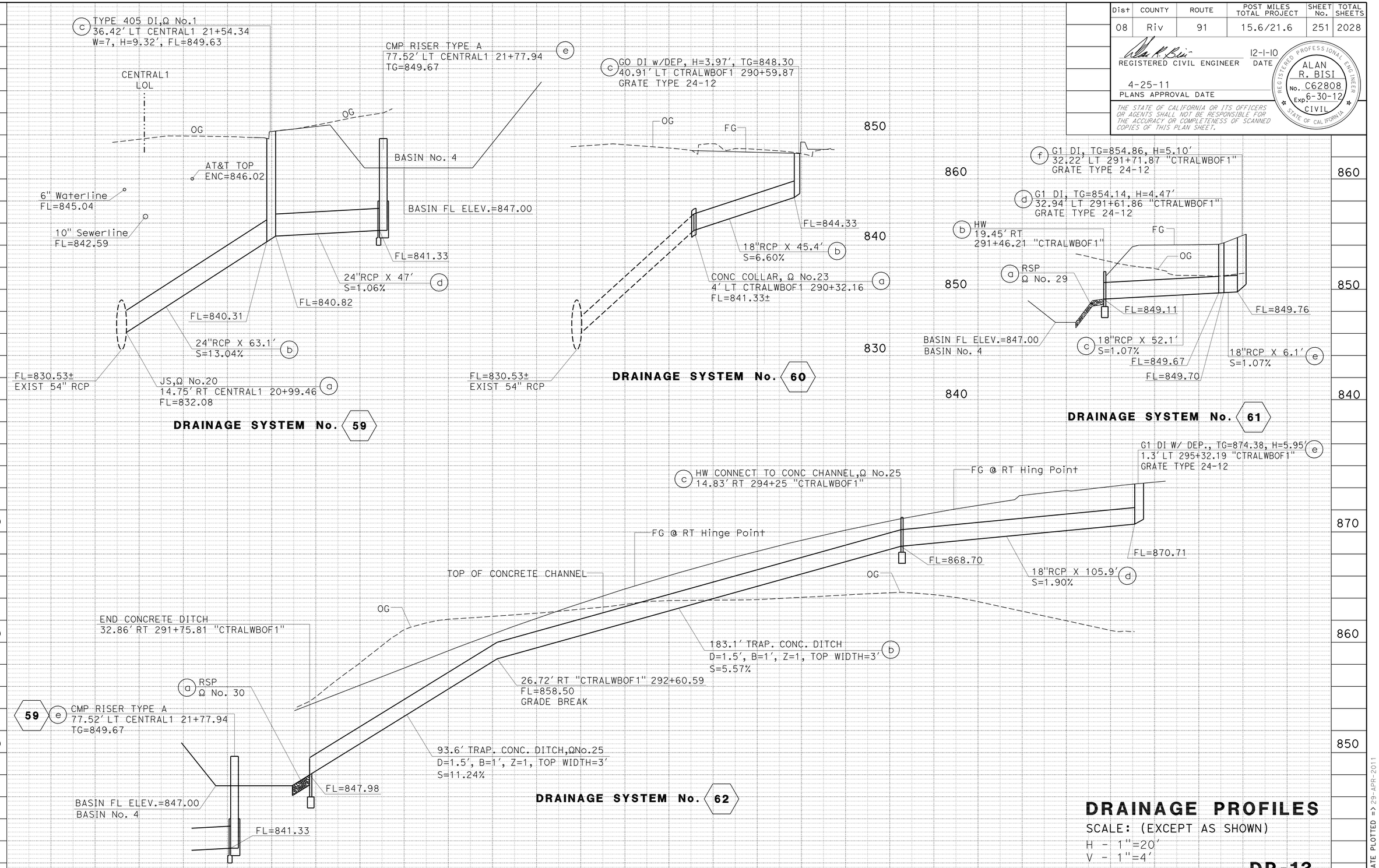

DRAINAGE PROFILES

SCALE: (EXCEPT AS SHOWN)
H - 1"=20'
V - 1"=4'

DP-13

THIS PLAN ACCURATE FOR DRAINAGE WORK ONLY.

STATION		TOTAL
CY	Exc	
	Emb	

REVISED BY | DATE REVISED
MOHAMMAD ABDRABOH | ALAN R. BISI
CALCULATED-DESIGNED BY | CHECKED BY
FUNCTIONAL SUPERVISOR: MARK PERTILE
STATE OF CALIFORNIA - DEPARTMENT OF TRANSPORTATION
Caltrans DESIGN

LAST REVISION 12-01-10 | DATE PLOTTED => 29-APR-2011 | TIME PLOTTED => 17:55

Dist	COUNTY	ROUTE	POST MILES TOTAL PROJECT	SHEET No.	TOTAL SHEETS
08	Riv	91	15.6/21.6	252	2028

REGISTERED CIVIL ENGINEER 12-1-10 DATE

4-25-11
PLANS APPROVAL DATE

REGISTERED PROFESSIONAL ENGINEER ALAN R. BISI No. C62808 Exp. 6-30-12 CIVIL STATE OF CALIFORNIA

THE STATE OF CALIFORNIA OR ITS OFFICERS OR AGENTS SHALL NOT BE RESPONSIBLE FOR THE ACCURACY OR COMPLETENESS OF SCANNED COPIES OF THIS PLAN SHEET.

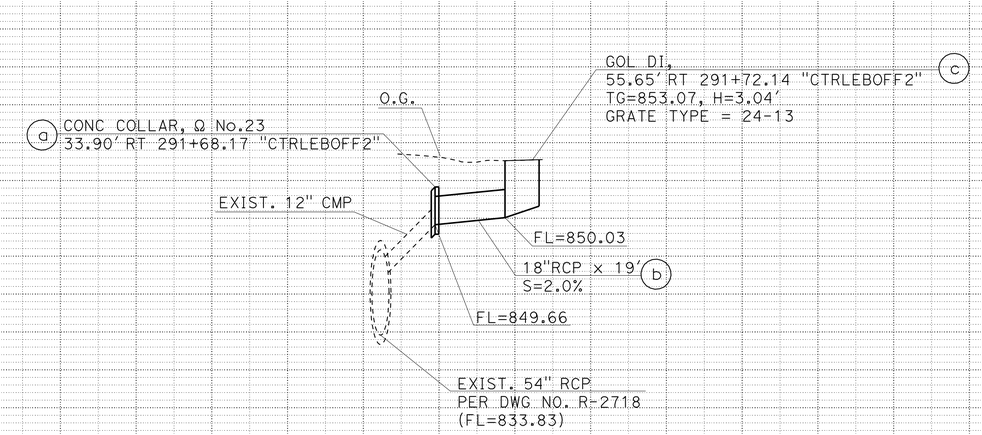

DRAINAGE SYSTEM No. 63

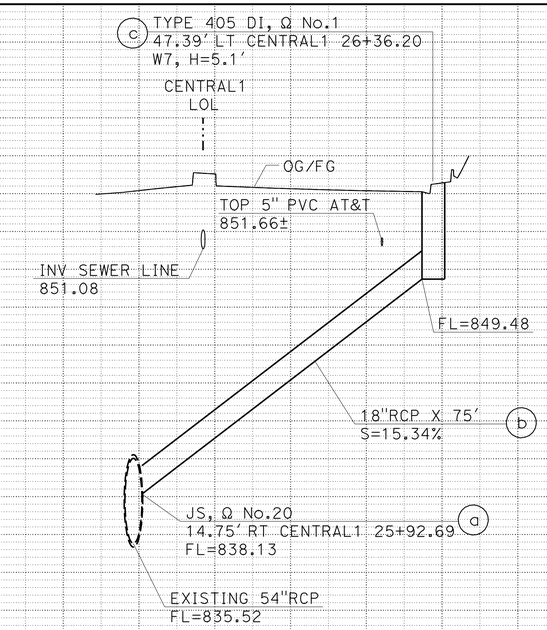

DRAINAGE SYSTEM No. 65

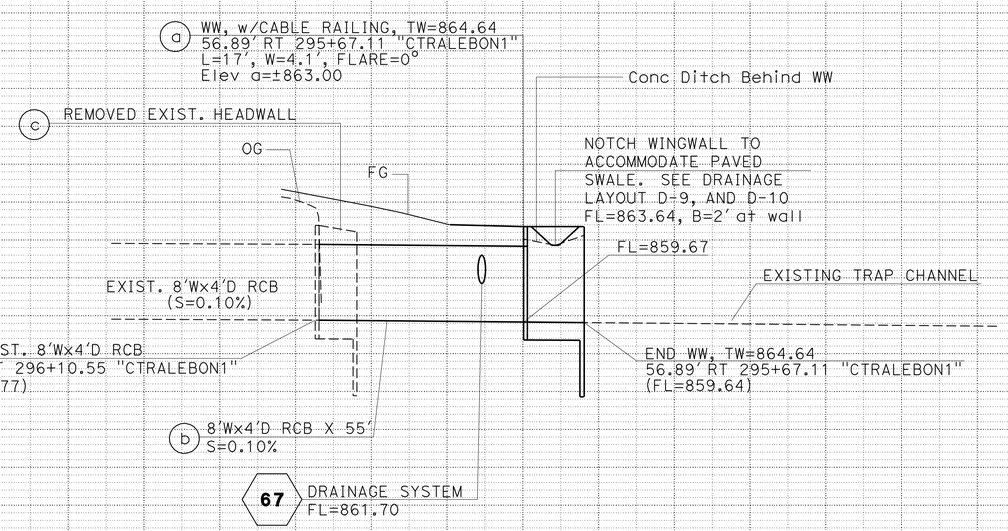

DRAINAGE SYSTEM No. 66

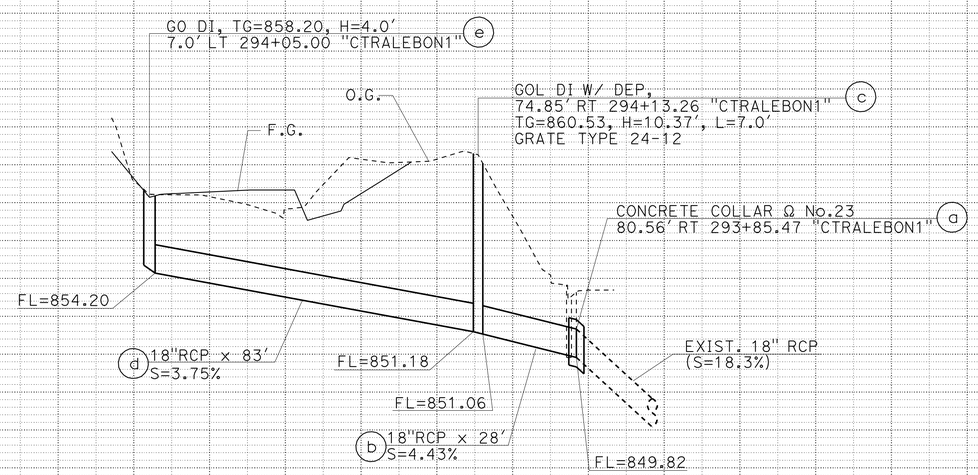

DRAINAGE SYSTEM No. 64

THIS PLAN ACCURATE FOR DRAINAGE WORK ONLY.

STATION			TOTAL
CY	Exc	0+00	
	Emb		

DRAINAGE PROFILES

SCALE: (EXCEPT AS SHOWN)
H - 1"=20'
V - 1"=4'

DP-14

STATE OF CALIFORNIA - DEPARTMENT OF TRANSPORTATION
Caltrans® DESIGN
FUNCTIONAL SUPERVISOR: MARK PERTILE
CALCULATED-DESIGNED BY: ALAN R. BISI
CHECKED BY: MOHAMMAD ABDRABOH
REVISED BY / DATE REVISED

LAST REVISION DATE PLOTTED => 29-APR-2011
TIME PLOTTED => 17:55
12-01-10

Dist	COUNTY	ROUTE	POST MILES TOTAL PROJECT	SHEET No.	TOTAL SHEETS
08	Riv	91	15.6/21.6	253	2028

REGISTERED CIVIL ENGINEER 12-1-10 DATE

4-25-11
PLANS APPROVAL DATE

REGISTERED PROFESSIONAL ENGINEER ALAN R. BISI No. C62808 Exp. 6-30-12 CIVIL STATE OF CALIFORNIA

THE STATE OF CALIFORNIA OR ITS OFFICERS OR AGENTS SHALL NOT BE RESPONSIBLE FOR THE ACCURACY OR COMPLETENESS OF SCANNED COPIES OF THIS PLAN SHEET.

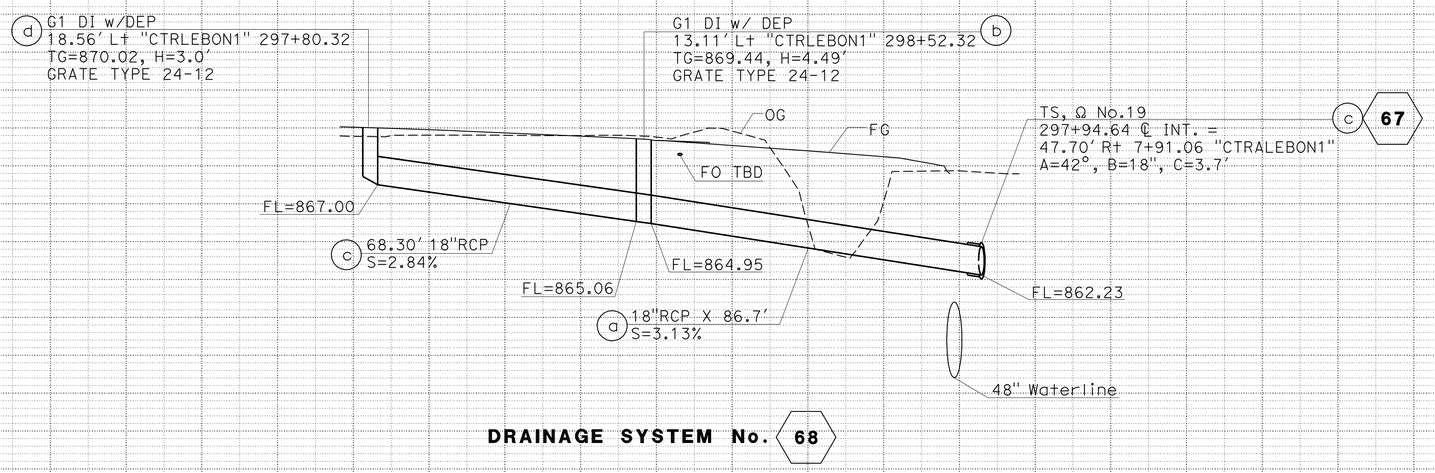

DRAINAGE SYSTEM No. 68

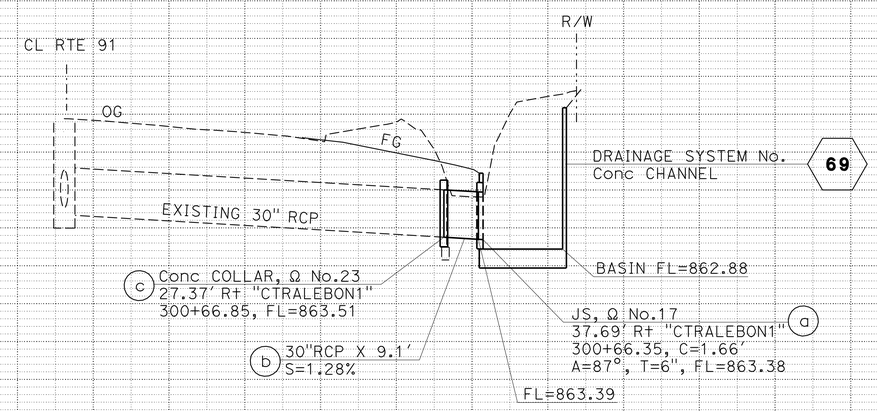

DRAINAGE SYSTEM No. 71

DRAINAGE PROFILES

SCALE: (EXCEPT AS SHOWN)
H - 1"=20'
V - 1"=4'

DP-15

THIS PLAN ACCURATE FOR DRAINAGE WORK ONLY.

STATION		TOTAL
CY	Exc	
	Emb	

STATE OF CALIFORNIA - DEPARTMENT OF TRANSPORTATION
Caltrans® DESIGN
FUNCTIONAL SUPERVISOR MARK PERTILE
CALCULATED-DESIGNED BY MOHAMMAD ABDRABOH
CHECKED BY ALAN R. BISI
REVISED BY
DATE REVISED

LAST REVISION 12-01-10 DATE PLOTTED => 29-APR-2011 TIME PLOTTED => 17:56

Dist	COUNTY	ROUTE	POST MILES TOTAL PROJECT	SHEET No.	TOTAL SHEETS
08	Riv	91	15.6/21.6	254	2028

REGISTERED CIVIL ENGINEER 3-29-10 DATE

4-25-11
PLANS APPROVAL DATE

REGISTERED PROFESSIONAL ENGINEER ALAN R. BISI No. C62808 Exp. 6-30-12 CIVIL STATE OF CALIFORNIA

THE STATE OF CALIFORNIA OR ITS OFFICERS OR AGENTS SHALL NOT BE RESPONSIBLE FOR THE ACCURACY OR COMPLETENESS OF SCANNED COPIES OF THIS PLAN SHEET.

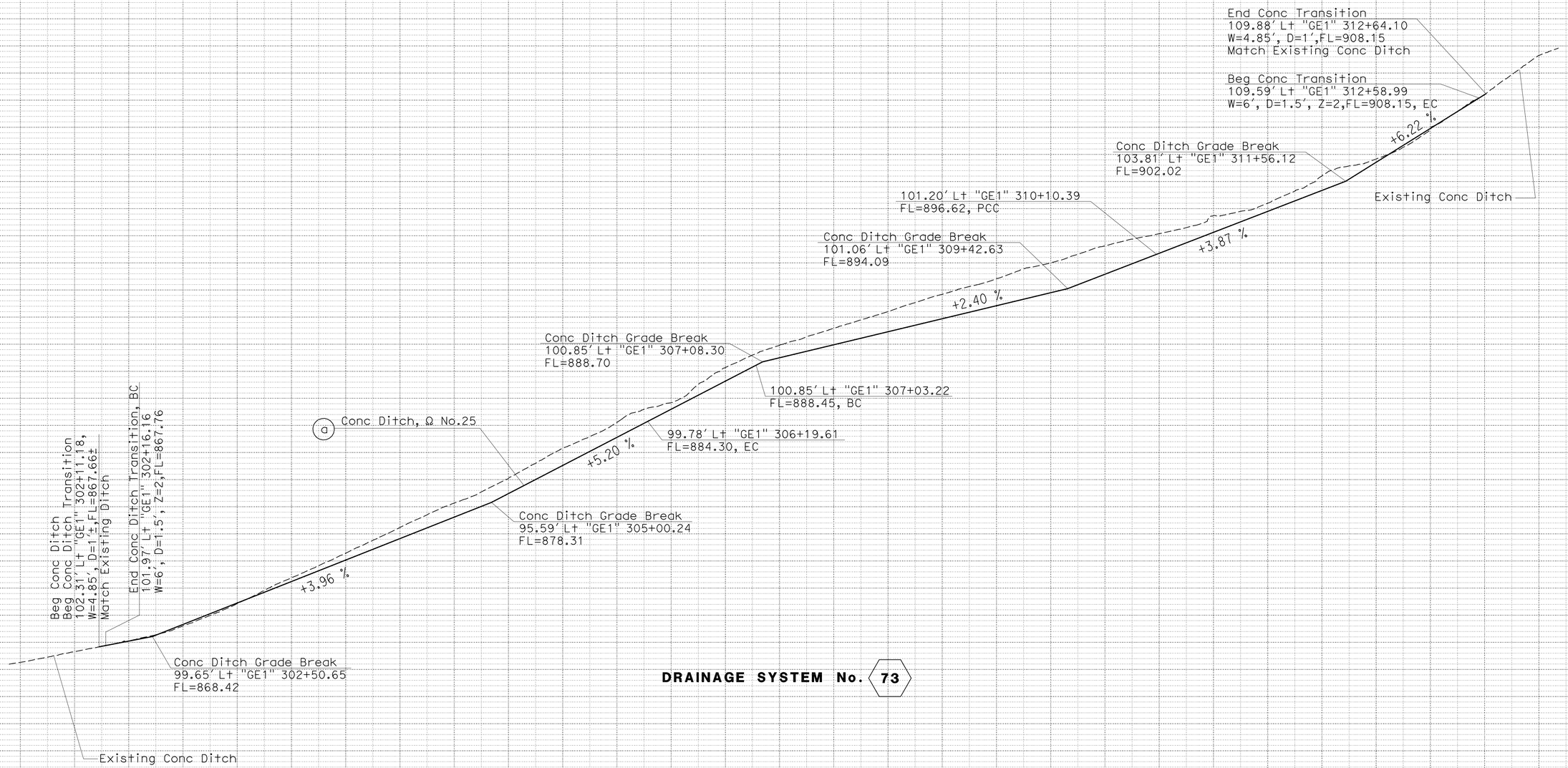

DRAINAGE SYSTEM No. 73

THIS PLAN ACCURATE FOR DRAINAGE WORK ONLY.

DRAINAGE PROFILES

SCALE: (EXCEPT AS SHOWN)
H - 1"=40'
V - 1"=4'

DP-16

STATION			TOTAL
CY	Exc	0+00	
	Emb		

STATE OF CALIFORNIA - DEPARTMENT OF TRANSPORTATION
Caltrans DESIGN

FUNCTIONAL SUPERVISOR: MARK PERTILE
CALCULATED-DESIGNED BY: MOHAMMAD ABDRABOH
CHECKED BY: ALAN R. BISI
REVISED BY / DATE REVISED

LAST REVISION 03-29-11
DATE PLOTTED => 29-APR-2011
TIME PLOTTED => 17:56

Dist	COUNTY	ROUTE	POST MILES TOTAL PROJECT	SHEET No.	TOTAL SHEETS
08	Riv	91	15.6/21.6	255	2028

REGISTERED CIVIL ENGINEER 12-1-10 DATE

4-25-11
PLANS APPROVAL DATE

REGISTERED PROFESSIONAL ENGINEER ALAN R. BISI No. C62808 Exp. 6-30-12 CIVIL STATE OF CALIFORNIA

THE STATE OF CALIFORNIA OR ITS OFFICERS OR AGENTS SHALL NOT BE RESPONSIBLE FOR THE ACCURACY OR COMPLETENESS OF SCANNED COPIES OF THIS PLAN SHEET.

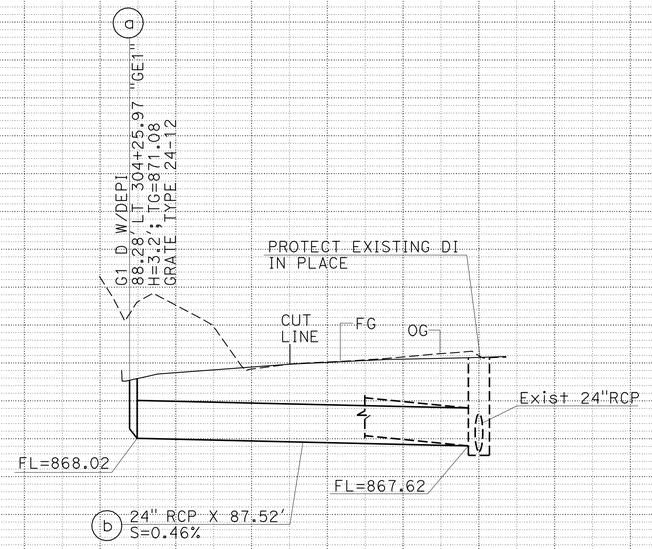

DRAINAGE SYSTEM No. 74

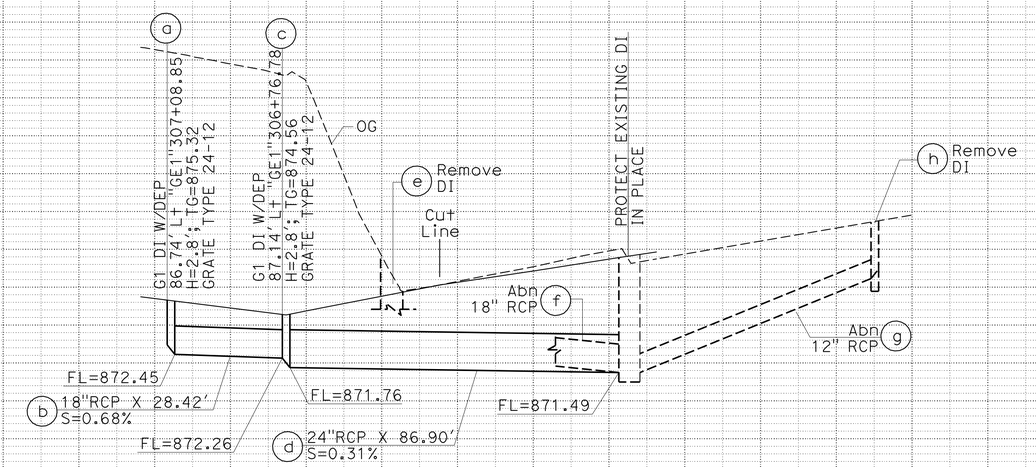

DRAINAGE SYSTEM No. 75

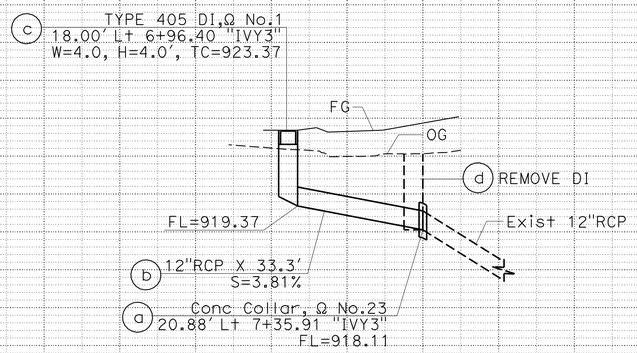

DRAINAGE SYSTEM No. 76

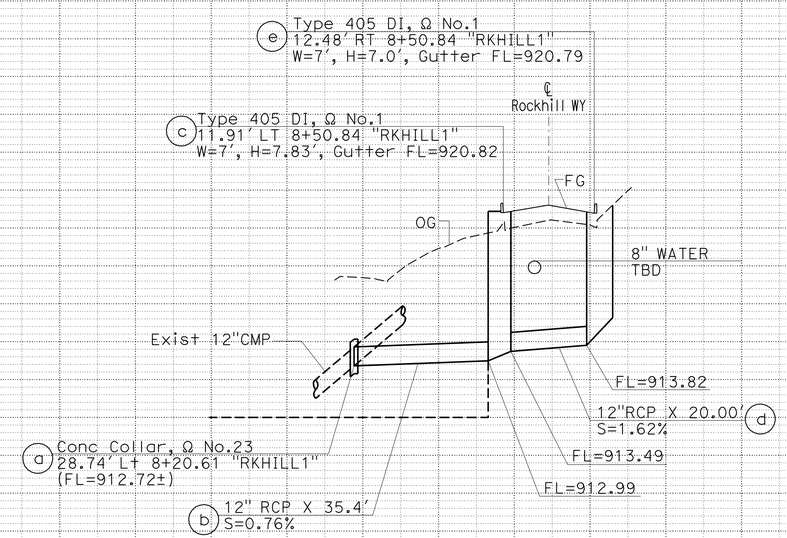

DRAINAGE SYSTEM No. 78

DRAINAGE PROFILES

SCALE: (EXCEPT AS SHOWN)
H - 1"=20'
V - 1"=4'

DP-17

THIS PLAN ACCURATE FOR DRAINAGE WORK ONLY.

STATION		
CY	Exc	0+00
	Emb	

STATE OF CALIFORNIA - DEPARTMENT OF TRANSPORTATION
Caltrans DESIGN
FUNCTIONAL SUPERVISOR: MARK PERTILE
CALCULATED-DESIGNED BY: MOHAMMAD ABDRABOH
CHECKED BY: ALAN R. BISI
REVISED BY / DATE REVISED

LAST REVISION 12-01-10 | DATE PLOTTED => 29-APR-2011 | TIME PLOTTED => 17:56

Dist	COUNTY	ROUTE	POST MILES TOTAL PROJECT	SHEET No.	TOTAL SHEETS
08	Riv	91	15.6/21.6	256	2028

REGISTERED CIVIL ENGINEER 12-1-10 DATE

4-25-11
PLANS APPROVAL DATE

REGISTERED PROFESSIONAL ENGINEER ALAN R. BISI No. C62808 Exp. 6-30-12 CIVIL STATE OF CALIFORNIA

THE STATE OF CALIFORNIA OR ITS OFFICERS OR AGENTS SHALL NOT BE RESPONSIBLE FOR THE ACCURACY OR COMPLETENESS OF SCANNED COPIES OF THIS PLAN SHEET.

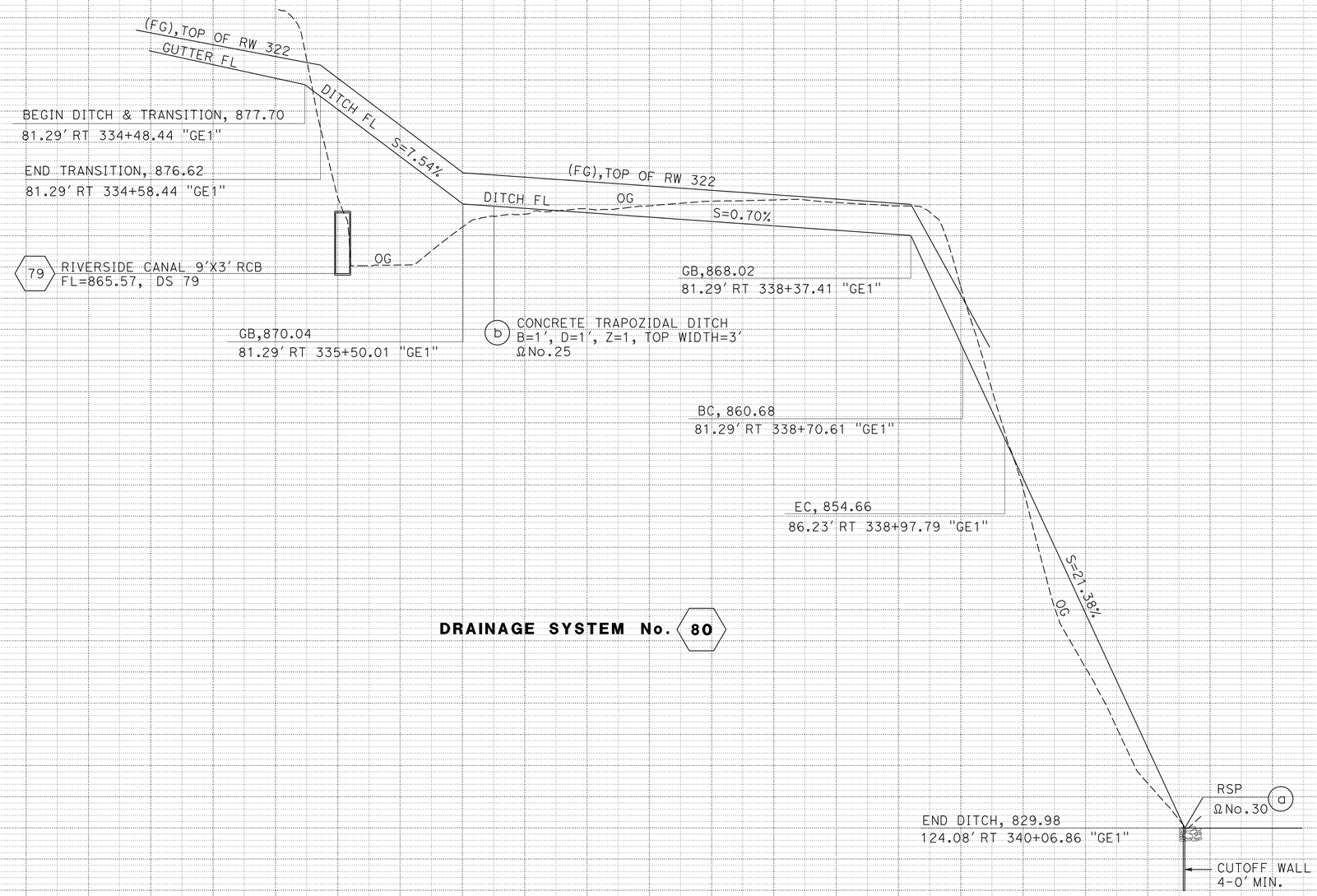

DRAINAGE SYSTEM No. 80

THIS PLAN ACCURATE FOR DRAINAGE WORK ONLY.

DRAINAGE PROFILES

SCALE: (EXCEPT AS SHOWN)
H - 1"=40'
V - 1"=4'

DP-18

STATION		TOTAL
CY	Exc	
	Emb	

STATE OF CALIFORNIA - DEPARTMENT OF TRANSPORTATION
Caltrans® DESIGN

FUNCTIONAL SUPERVISOR: MARK PERTILE
CALCULATED-DESIGNED BY: ALAN R. BISI
CHECKED BY: MOHAMMAD ABDRABOH
REVISED BY / DATE REVISED

LAST REVISION 12-01-10 | DATE PLOTTED => 29-APR-2011 | TIME PLOTTED => 17:56

Dist	COUNTY	ROUTE	POST MILES TOTAL PROJECT	SHEET No.	TOTAL SHEETS
08	Riv	91	15.6/21.6	257	2028

REGISTERED CIVIL ENGINEER 12-1-10 DATE

4-25-11
PLANS APPROVAL DATE

REGISTERED PROFESSIONAL ENGINEER ALAN R. BISI No. C62808 Exp. 6-30-12 CIVIL STATE OF CALIFORNIA

THE STATE OF CALIFORNIA OR ITS OFFICERS OR AGENTS SHALL NOT BE RESPONSIBLE FOR THE ACCURACY OR COMPLETENESS OF SCANNED COPIES OF THIS PLAN SHEET.

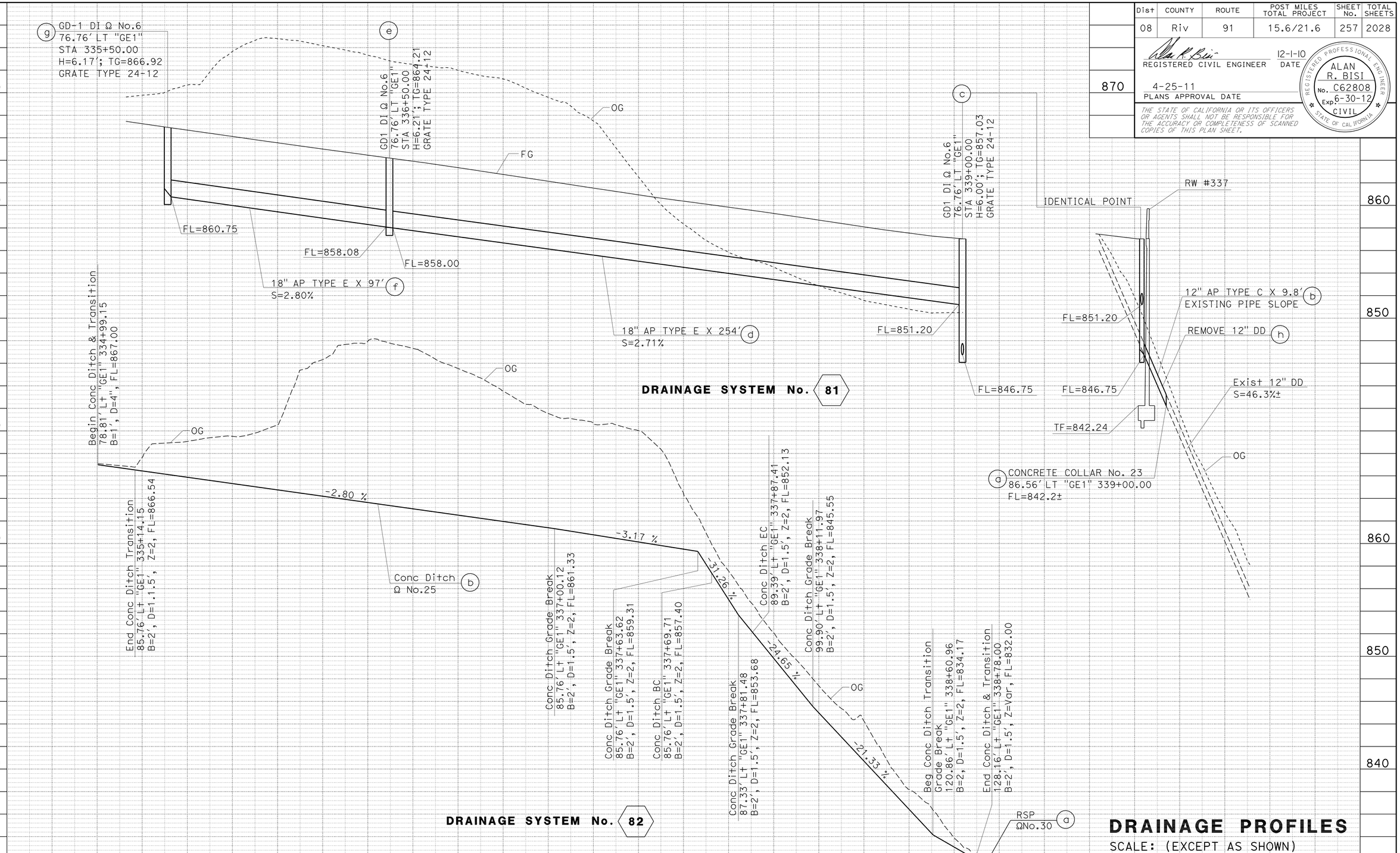

DRAINAGE PROFILES

SCALE: (EXCEPT AS SHOWN)
H - 1"=20'
V - 1"=4'

DP-19

STATION		TOTAL
CY	Exc	
	Emb	

STATE OF CALIFORNIA - DEPARTMENT OF TRANSPORTATION
Caltrans® DESIGN

FUNCTIONAL SUPERVISOR: MARK PERTILE
CALCULATED-DESIGNED BY: MOHAMMAD ABDRABOH
CHECKED BY: ALAN R. BISI
REVISED BY / DATE REVISED

LAST REVISION 12-01-10 | DATE PLOTTED => 29-APR-2011 | TIME PLOTTED => 17:56

BORDER LAST REVISED 4/11/2008 | RELATIVE BORDER SCALE IS IN INCHES 0 1 2 3 | USERNAME => trstrk | DGN FILE => 844840ib019.dgn | CU 08227 | EA 448401

Dist	COUNTY	ROUTE	POST MILES TOTAL PROJECT	SHEET No.	TOTAL SHEETS
08	Riv	91	15.6/21.6	258	2028

REGISTERED CIVIL ENGINEER 12-1-10 DATE

4-25-11
PLANS APPROVAL DATE

REGISTERED PROFESSIONAL ENGINEER ALAN R. BISI No. C62808 Exp. 6-30-12 CIVIL STATE OF CALIFORNIA

THE STATE OF CALIFORNIA OR ITS OFFICERS OR AGENTS SHALL NOT BE RESPONSIBLE FOR THE ACCURACY OR COMPLETENESS OF SCANNED COPIES OF THIS PLAN SHEET.

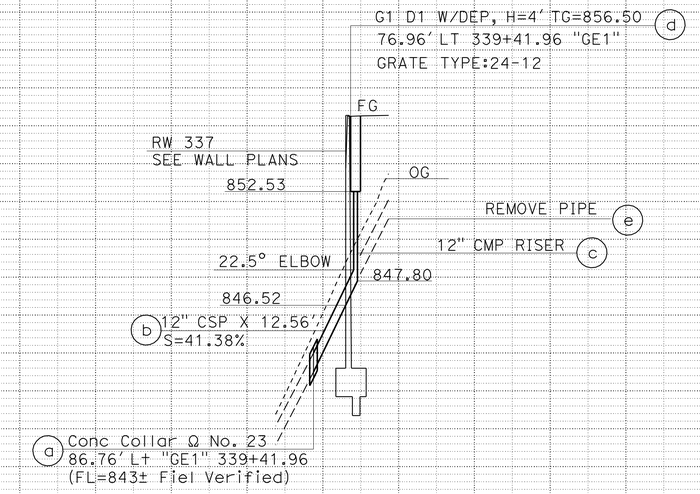

DRAINAGE SYSTEM No. 83

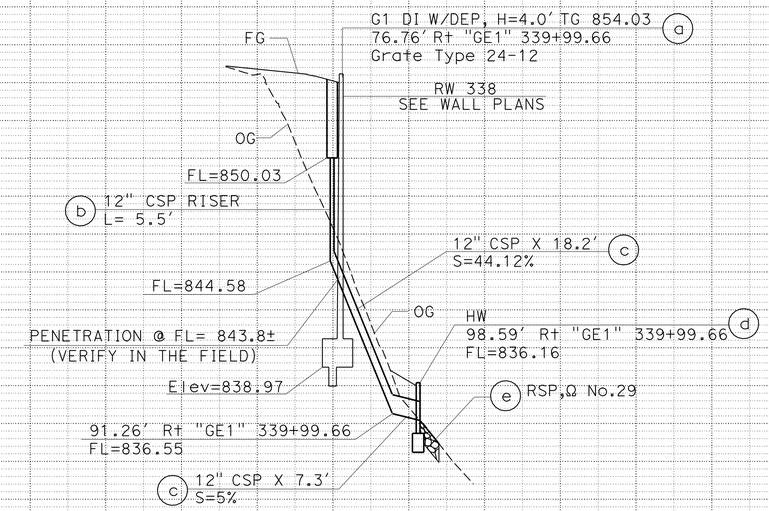

DRAINAGE SYSTEM No. 84

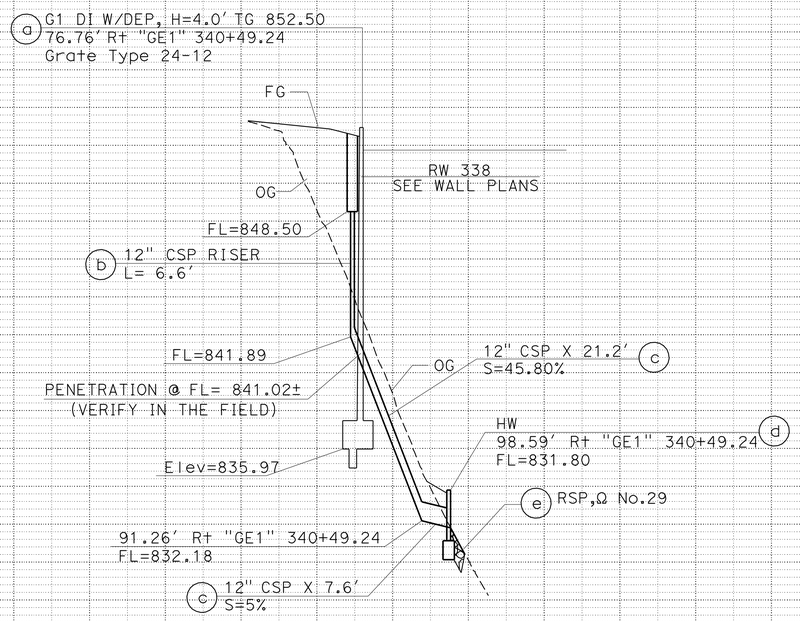

DRAINAGE SYSTEM No. 85

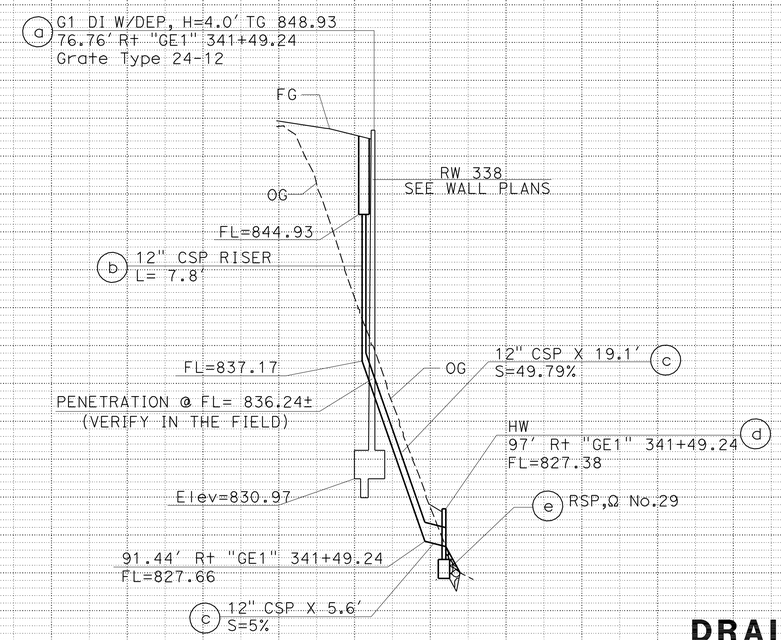

DRAINAGE SYSTEM No. 86

DRAINAGE PROFILES

SCALE: (EXCEPT AS SHOWN)
H - 1"=20'
V - 1"=4'

DP-20

THIS PLAN ACCURATE FOR DRAINAGE WORK ONLY.

STATION		TOTAL
CY	Exc	
	Emb	

STATE OF CALIFORNIA - DEPARTMENT OF TRANSPORTATION
Caltrans® DESIGN
FUNCTIONAL SUPERVISOR: MARK PERTILE
CALCULATED-DESIGNED BY: MOHAMMAD ABDRABOH
CHECKED BY: ALAN R. BISI
REVISED BY / DATE REVISED

LAST REVISION DATE PLOTTED => 29-APR-2011
TIME PLOTTED => 17:56
12-01-10

Dist	COUNTY	ROUTE	POST MILES TOTAL PROJECT	SHEET No.	TOTAL SHEETS
08	Riv	91	15.6/21.6	259	2028

REGISTERED CIVIL ENGINEER 12-1-10 DATE

4-25-11
PLANS APPROVAL DATE

REGISTERED PROFESSIONAL ENGINEER ALAN R. BISI No. C62808 Exp. 6-30-12 CIVIL STATE OF CALIFORNIA

THE STATE OF CALIFORNIA OR ITS OFFICERS OR AGENTS SHALL NOT BE RESPONSIBLE FOR THE ACCURACY OR COMPLETENESS OF SCANNED COPIES OF THIS PLAN SHEET.

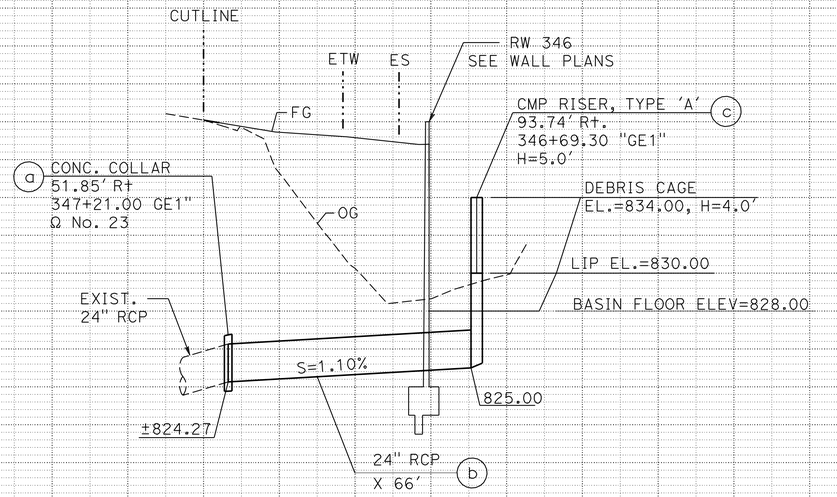

DRAINAGE SYSTEM No. 87

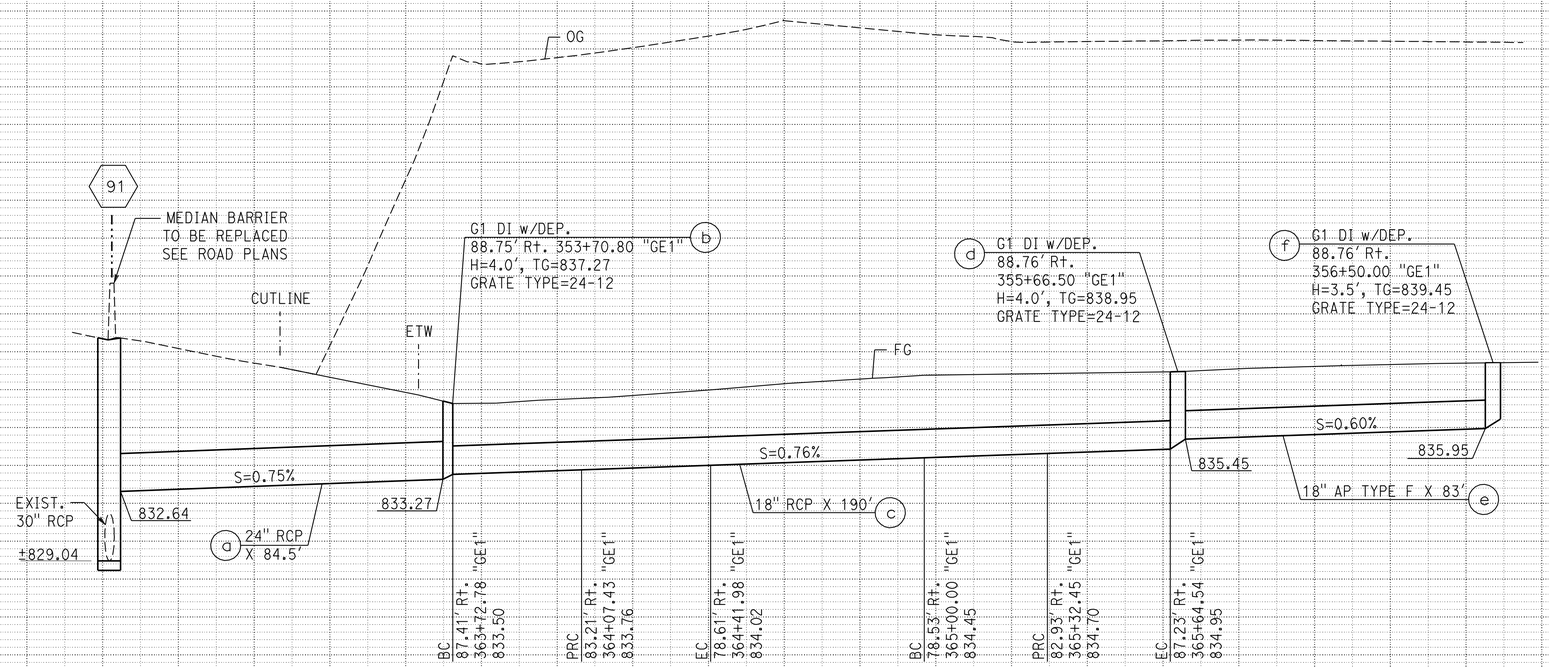

DRAINAGE SYSTEM No. 90

DRAINAGE PROFILES

SCALE: (EXCEPT AS SHOWN)
H - 1"=20'
V - 1"=4'

DP-21

THIS PLAN ACCURATE FOR DRAINAGE WORK ONLY.

STATION		TOTAL
CY	Exc	
	Emb	

STATE OF CALIFORNIA - DEPARTMENT OF TRANSPORTATION
Caltrans® DESIGN

FUNCTIONAL SUPERVISOR: MARK PERTILE
CALCULATED-DESIGNED BY: MOHAMMAD ABDRABOH
CHECKED BY: ALAN R. BISI
REVISED BY / DATE REVISED

LAST REVISION DATE PLOTTED => 29-APR-2011
12-01-10 TIME PLOTTED => 17:56

Dist	COUNTY	ROUTE	POST MILES TOTAL PROJECT	SHEET No.	TOTAL SHEETS
08	Riv	91	15.6/21.6	260	2028

REGISTERED CIVIL ENGINEER 12-1-10 DATE

4-25-11
PLANS APPROVAL DATE

REGISTERED PROFESSIONAL ENGINEER ALAN R. BISI No. C62808 Exp. 6-30-12 CIVIL STATE OF CALIFORNIA

THE STATE OF CALIFORNIA OR ITS OFFICERS OR AGENTS SHALL NOT BE RESPONSIBLE FOR THE ACCURACY OR COMPLETENESS OF SCANNED COPIES OF THIS PLAN SHEET.

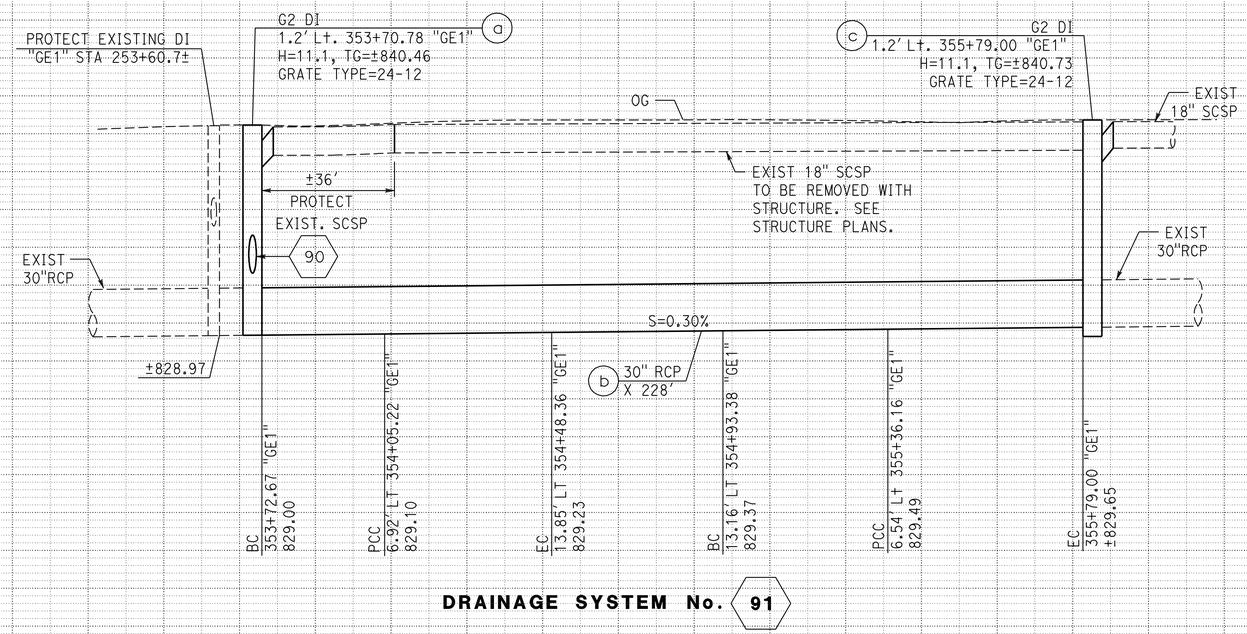

DRAINAGE SYSTEM No. 91

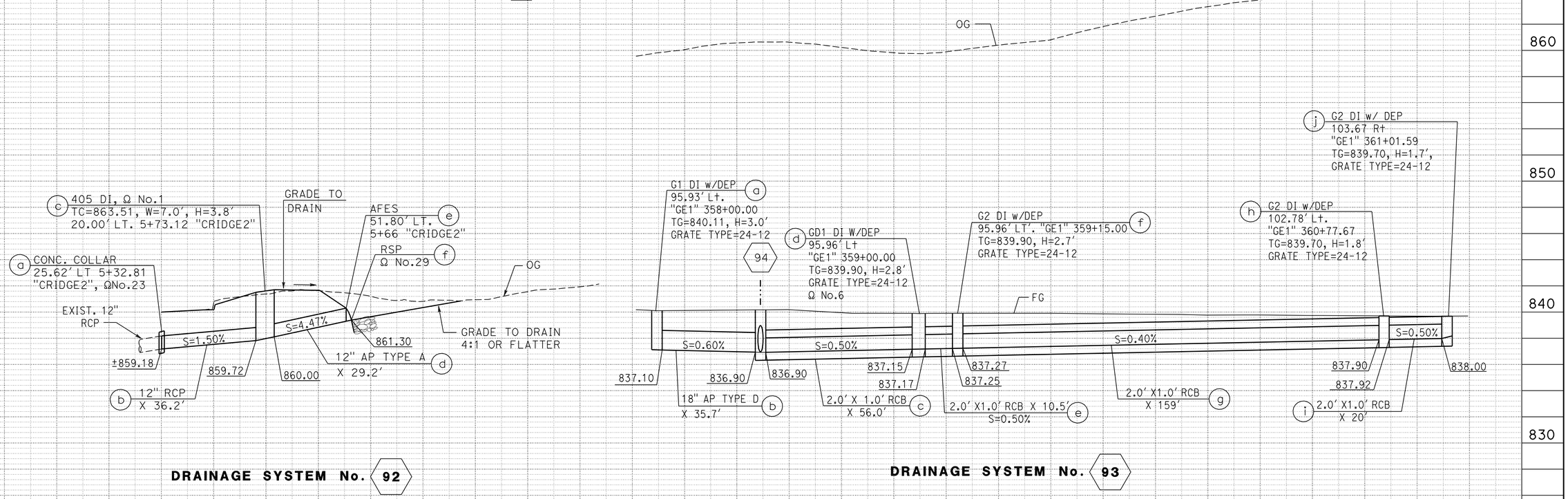

DRAINAGE SYSTEM No. 92

DRAINAGE SYSTEM No. 93

DRAINAGE PROFILES

SCALE: (EXCEPT AS SHOWN)
H - 1"=20'
V - 1"=4'

DP-22

THIS PLAN ACCURATE FOR DRAINAGE WORK ONLY.

STATION		TOTAL
CY	Exc	
	Emb	

REVISED BY | DATE REVISED
MOHAMMAD ABDRABOH | ALAN R. BISI
CALCULATED-DESIGNED BY | CHECKED BY
FUNCTIONAL SUPERVISOR | MARK PERTILE

STATE OF CALIFORNIA - DEPARTMENT OF TRANSPORTATION
Caltrans
DESIGN

LAST REVISION 12-01-10 | DATE PLOTTED => 30-APR-2011 | TIME PLOTTED => 06:48

Dist	COUNTY	ROUTE	POST MILES TOTAL PROJECT	SHEET No.	TOTAL SHEETS
08	Riv	91	15.6/21.6	261	2028

REGISTERED CIVIL ENGINEER 12-1-10 DATE

4-25-11
PLANS APPROVAL DATE

REGISTERED PROFESSIONAL ENGINEER ALAN R. BISI No. C62808 Exp. 6-30-12 CIVIL STATE OF CALIFORNIA

THE STATE OF CALIFORNIA OR ITS OFFICERS OR AGENTS SHALL NOT BE RESPONSIBLE FOR THE ACCURACY OR COMPLETENESS OF SCANNED COPIES OF THIS PLAN SHEET.

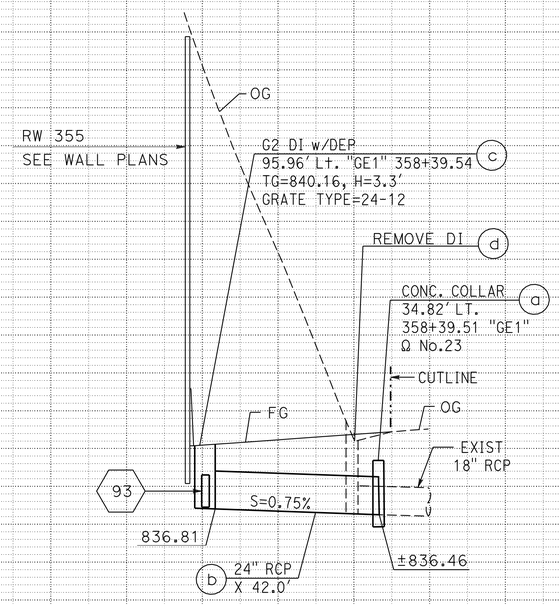

DRAINAGE SYSTEM No. 94

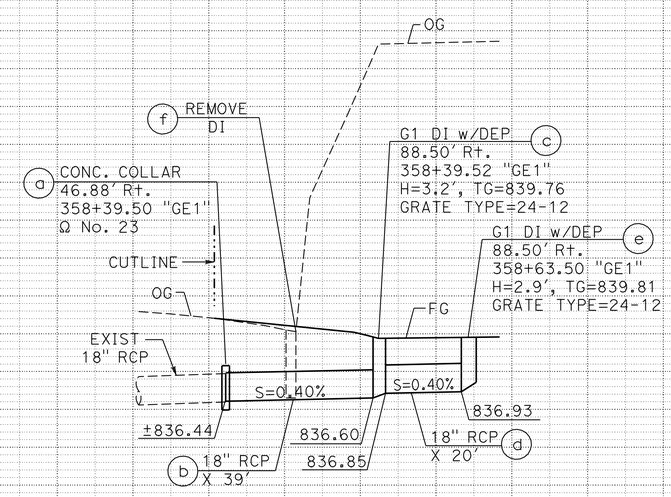

DRAINAGE SYSTEM No. 95

THIS PLAN ACCURATE FOR DRAINAGE WORK ONLY.

DRAINAGE PROFILES

SCALE: (EXCEPT AS SHOWN)
H - 1"=20'
V - 1"=4'

DP-23

STATION		TOTAL
CY	Exc	
	Emb	

STATE OF CALIFORNIA - DEPARTMENT OF TRANSPORTATION
Caltrans® DESIGN

FUNCTIONAL SUPERVISOR: MARK PERTILE
CALCULATED-DESIGNED BY: MOHAMMAD ABDRABOH
CHECKED BY: ALAN R. BISI
REVISED BY
DATE REVISED

LAST REVISION 12-01-10
DATE PLOTTED => 29-APR-2011
TIME PLOTTED => 17:56

Dist	COUNTY	ROUTE	POST MILES TOTAL PROJECT	SHEET No.	TOTAL SHEETS
08	Riv	91	15.6/21.6	262	2028

REGISTERED CIVIL ENGINEER 12-1-10 DATE

4-25-11
PLANS APPROVAL DATE

REGISTERED PROFESSIONAL ENGINEER ALAN R. BISI No. C62808 Exp. 6-30-12 CIVIL STATE OF CALIFORNIA

THE STATE OF CALIFORNIA OR ITS OFFICERS OR AGENTS SHALL NOT BE RESPONSIBLE FOR THE ACCURACY OR COMPLETENESS OF SCANNED COPIES OF THIS PLAN SHEET.

NOTE:

1. ALL JOINTS AND COLLARS SHALL BE WATERTIGHT AND SELF-CENTERING.
2. NEW PIPE SHALL BE JOINED TO EXISTING PIPE AT FIRST SUITABLE JOINT BEYOND ROADWAY CUT LINE, AS DETERMINED BY THE ENGINEER. CONTRACTOR SHALL USE NEW WATERTIGHT SEALS FOR ALL JOINTS ON NEWLY INSTALLED SECTIONS.

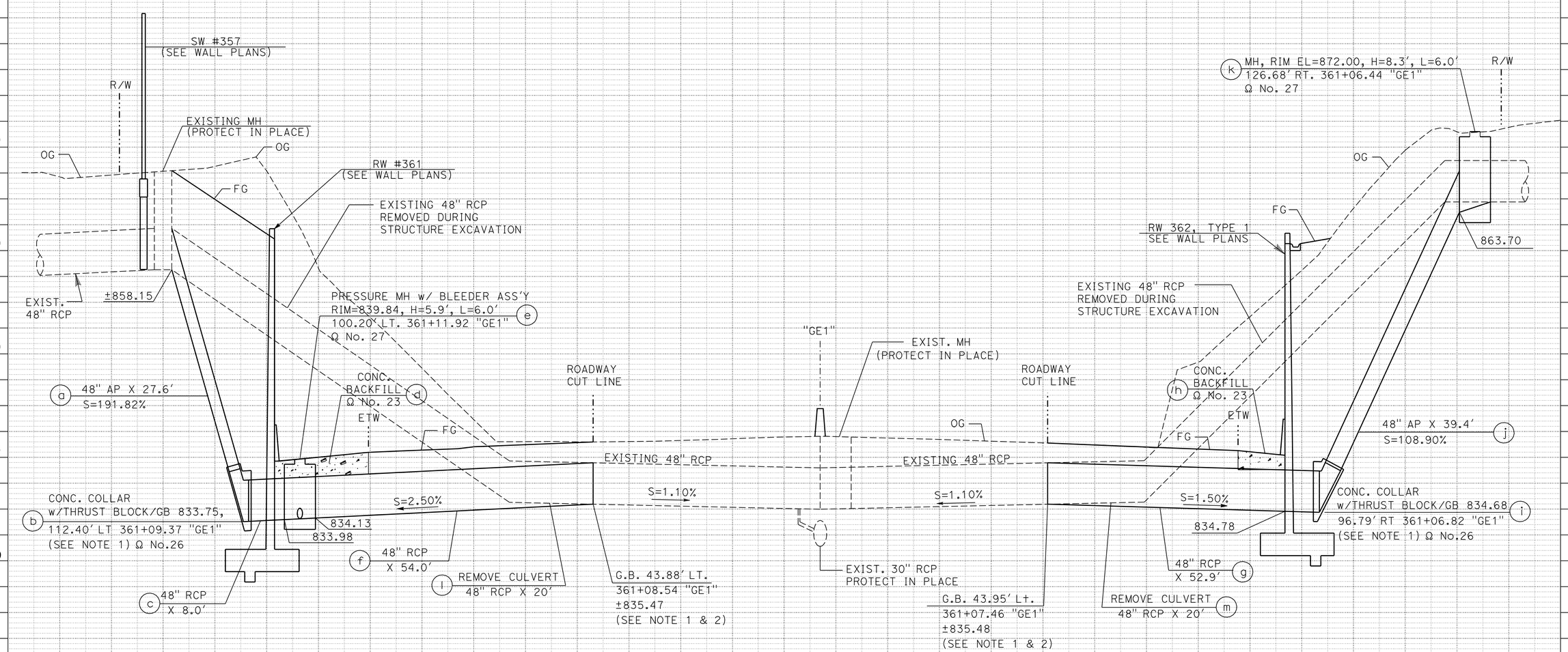

DRAINAGE SYSTEM No. 96

DRAINAGE PROFILES

SCALE: (EXCEPT AS SHOWN)
H - 1"=10'
V - 1"=5'

DP-24

THIS PLAN ACCURATE FOR DRAINAGE WORK ONLY.

STATION		TOTAL
CY	Exc	
	Emb	

REVISED BY | DATE REVISED
MOHAMMAD ABDRABOH | ALAN R. BISI
CALCULATED-DESIGNED BY | CHECKED BY
FUNCTIONAL SUPERVISOR: MARK PERTILE

STATE OF CALIFORNIA - DEPARTMENT OF TRANSPORTATION
Caltrans
DESIGN

LAST REVISION 12-01-10 | DATE PLOTTED => 29-APR-2011 | TIME PLOTTED => 17:57

Dist	COUNTY	ROUTE	POST MILES TOTAL PROJECT	SHEET No.	TOTAL SHEETS
08	Riv	91	15.6/21.6	263	2028

REGISTERED CIVIL ENGINEER 12-1-10 DATE

4-25-11
PLANS APPROVAL DATE

REGISTERED PROFESSIONAL ENGINEER ALAN R. BISI No. C62808 Exp. 6-30-12 CIVIL STATE OF CALIFORNIA

THE STATE OF CALIFORNIA OR ITS OFFICERS OR AGENTS SHALL NOT BE RESPONSIBLE FOR THE ACCURACY OR COMPLETENESS OF SCANNED COPIES OF THIS PLAN SHEET.

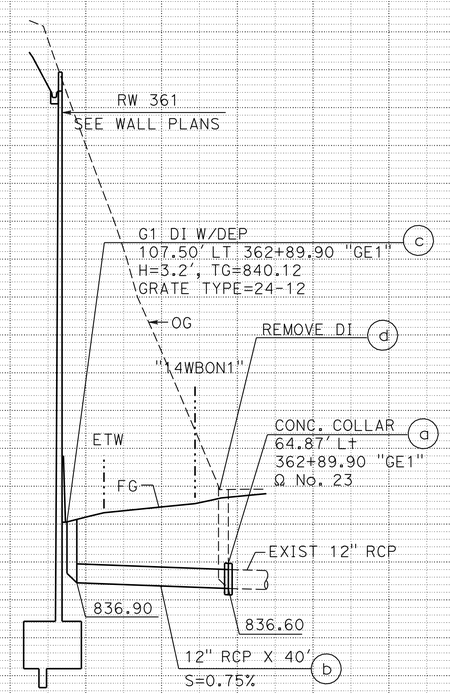

DRAINAGE SYSTEM No. 97

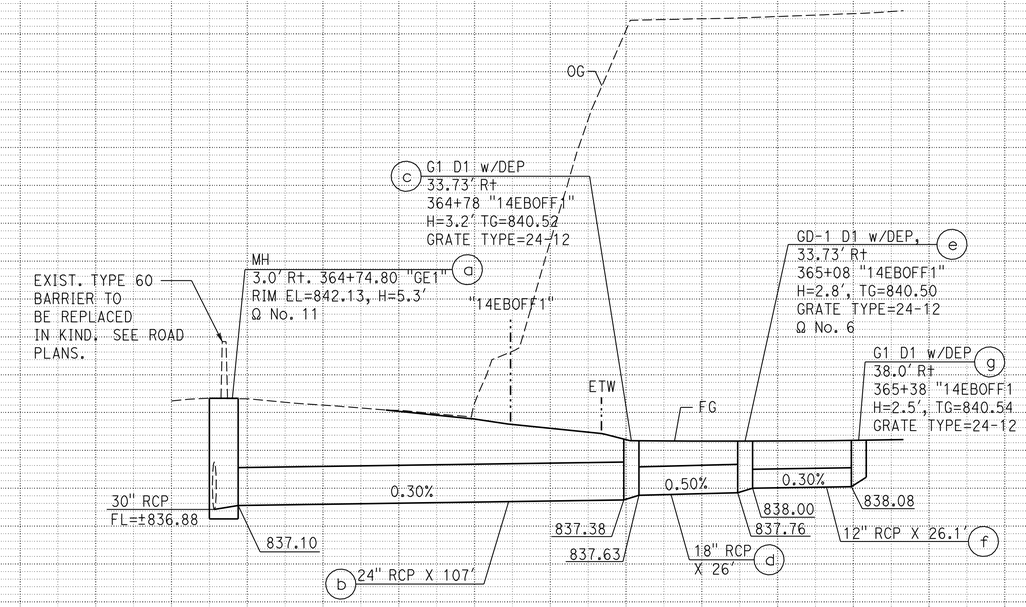

DRAINAGE SYSTEM No. 98

DRAINAGE PROFILES

SCALE: (EXCEPT AS SHOWN)
H - 1"=20'
V - 1"=4'

DP-25

THIS PLAN ACCURATE FOR DRAINAGE WORK ONLY.

STATION		TOTAL
CY	Exc	
	Emb	

STATE OF CALIFORNIA - DEPARTMENT OF TRANSPORTATION
DESIGN

FUNCTIONAL SUPERVISOR: MARK PERTILE
CALCULATED-DESIGNED BY: MOHAMMAD ABDRABOH
CHECKED BY: ALAN R. BISI
REVISED BY
DATE REVISED

LAST REVISION DATE PLOTTED => 29-APR-2011
TIME PLOTTED => 17:57
12-01-10

Dist	COUNTY	ROUTE	POST MILES TOTAL PROJECT	SHEET No.	TOTAL SHEETS
08	Riv	91	15.6/21.6	264	2028

REGISTERED CIVIL ENGINEER 3-29-10 DATE

4-25-11
PLANS APPROVAL DATE

REGISTERED PROFESSIONAL ENGINEER ALAN R. BISI No. C62808 Exp. 6-30-12 CIVIL STATE OF CALIFORNIA

THE STATE OF CALIFORNIA OR ITS OFFICERS OR AGENTS SHALL NOT BE RESPONSIBLE FOR THE ACCURACY OR COMPLETENESS OF SCANNED COPIES OF THIS PLAN SHEET.

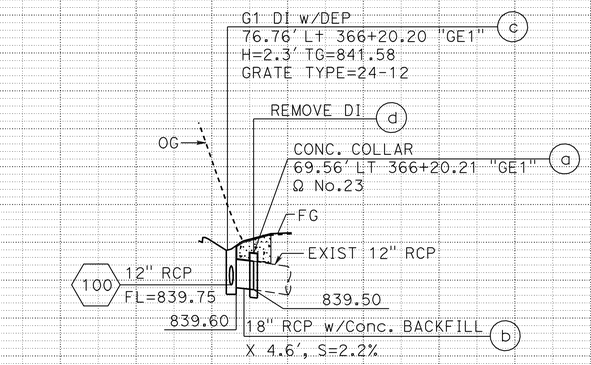

DRAINAGE SYSTEM No. 99

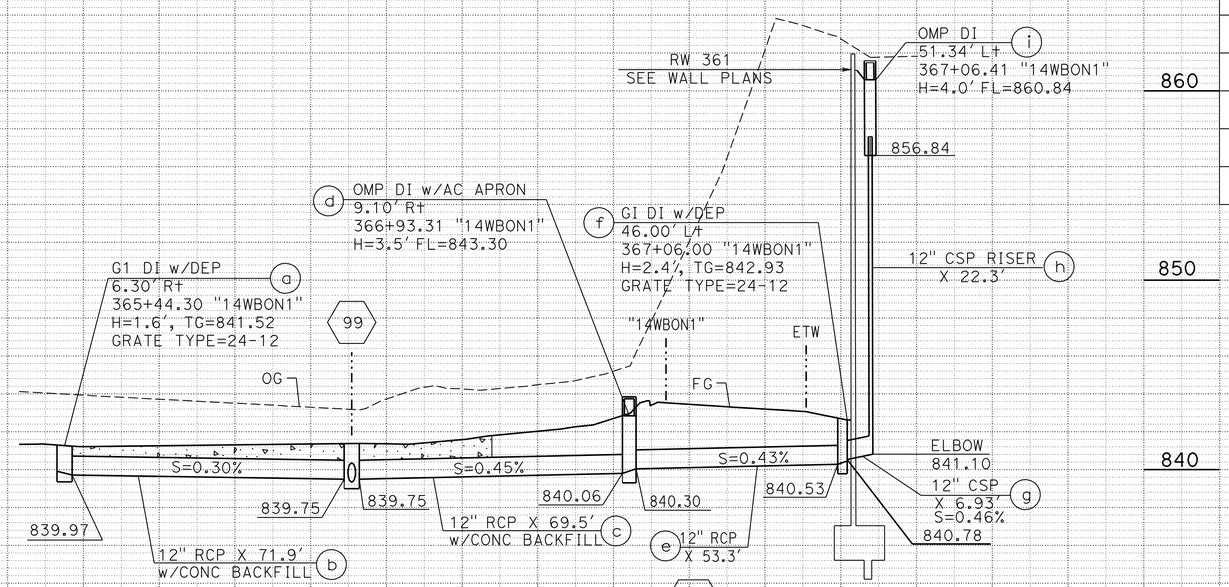

DRAINAGE SYSTEM No. 100

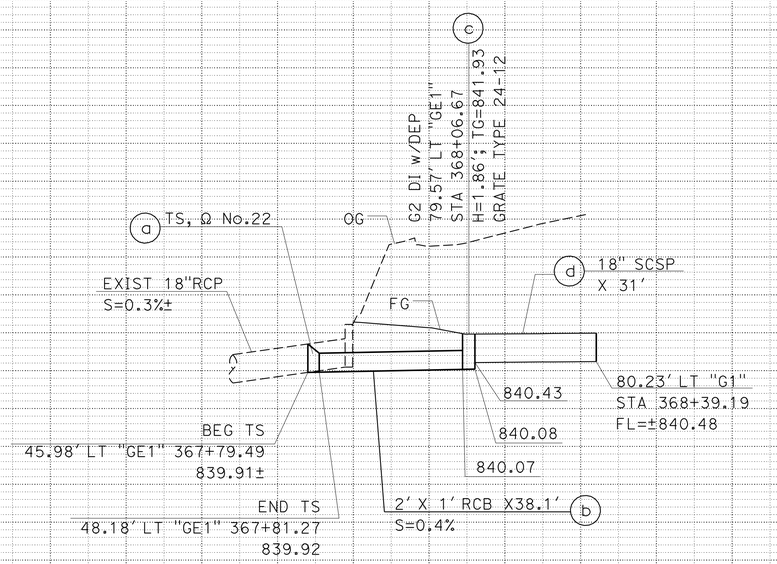

DRAINAGE SYSTEM No. 101

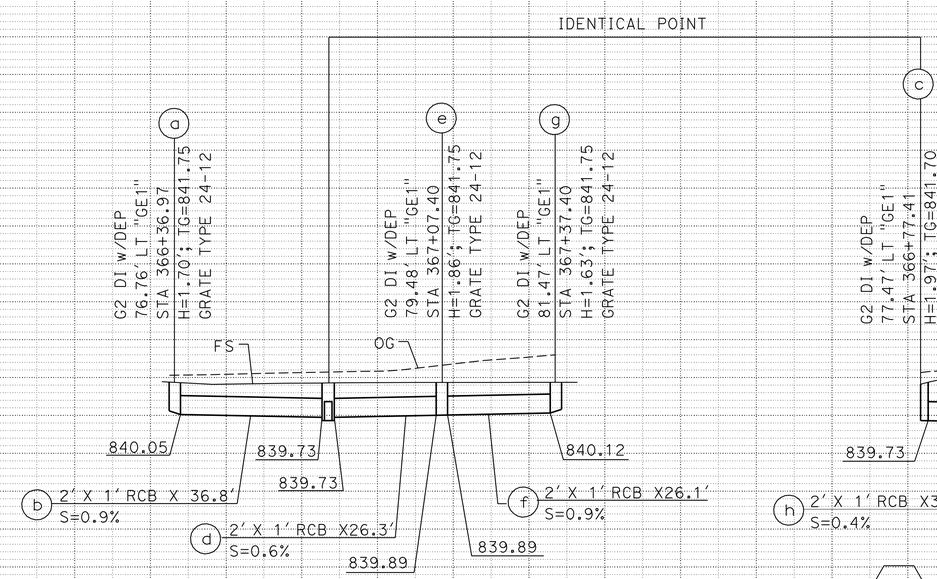

DRAINAGE SYSTEM No. 102

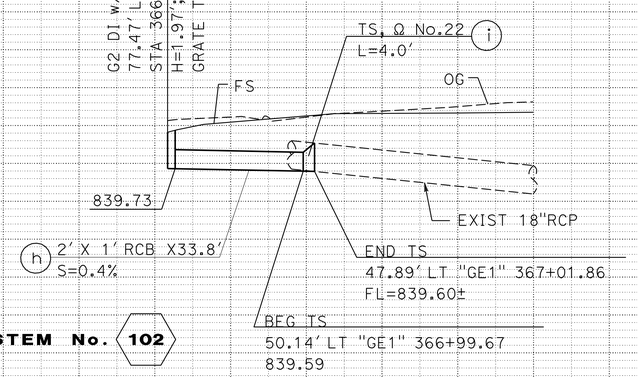

DRAINAGE PROFILES

SCALE: (EXCEPT AS SHOWN)
H - 1"=20'
V - 1"=4'

DP-26

THIS PLAN ACCURATE FOR DRAINAGE WORK ONLY.

STATION		TOTAL
CY	Exc	
	Emb	

STATE OF CALIFORNIA - DEPARTMENT OF TRANSPORTATION
Caltrans DESIGN
FUNCTIONAL SUPERVISOR MARK PERTILE
CALCULATED-DESIGNED BY MOHAMMAD ABDRABOH
CHECKED BY ALAN R. BISI
REVISED BY
DATE REVISED

LAST REVISION 03-29-11 DATE PLOTTED => 29-APR-2011 TIME PLOTTED => 17:57

Dist	COUNTY	ROUTE	POST MILES TOTAL PROJECT	SHEET No.	TOTAL SHEETS
08	Riv	91	15.6/21.6	265	2028

REGISTERED CIVIL ENGINEER 3-29-10 DATE

4-25-11
PLANS APPROVAL DATE

REGISTERED PROFESSIONAL ENGINEER ALAN R. BISI No. C62808 Exp. 6-30-12 CIVIL STATE OF CALIFORNIA

THE STATE OF CALIFORNIA OR ITS OFFICERS OR AGENTS SHALL NOT BE RESPONSIBLE FOR THE ACCURACY OR COMPLETENESS OF SCANNED COPIES OF THIS PLAN SHEET.

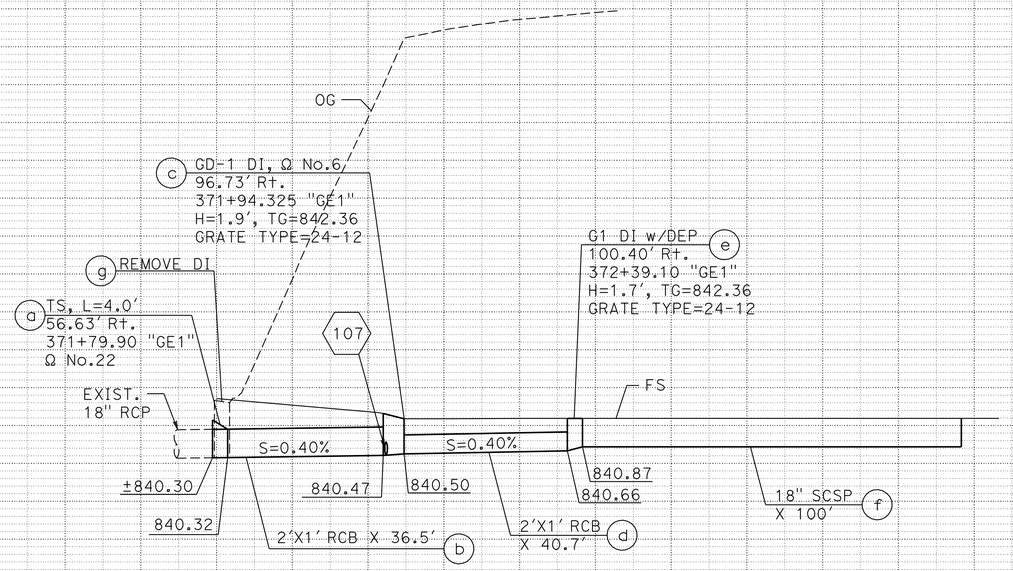

DRAINAGE SYSTEM No. 103

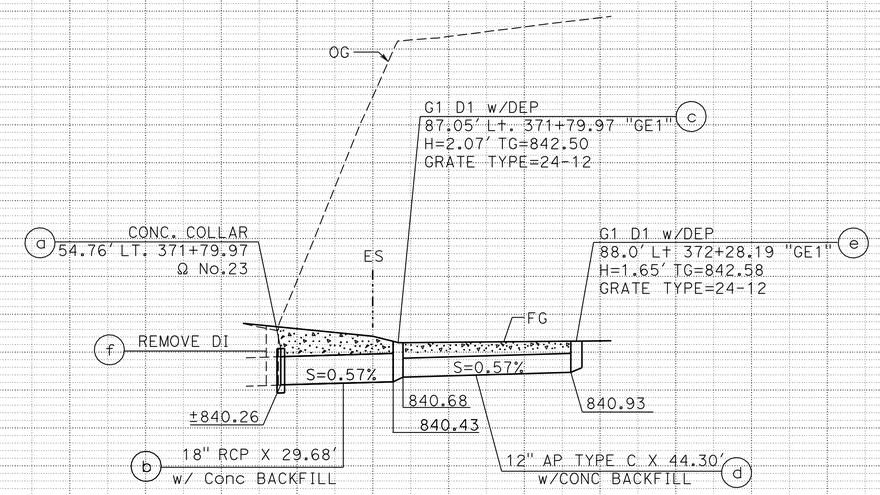

DRAINAGE SYSTEM No. 104

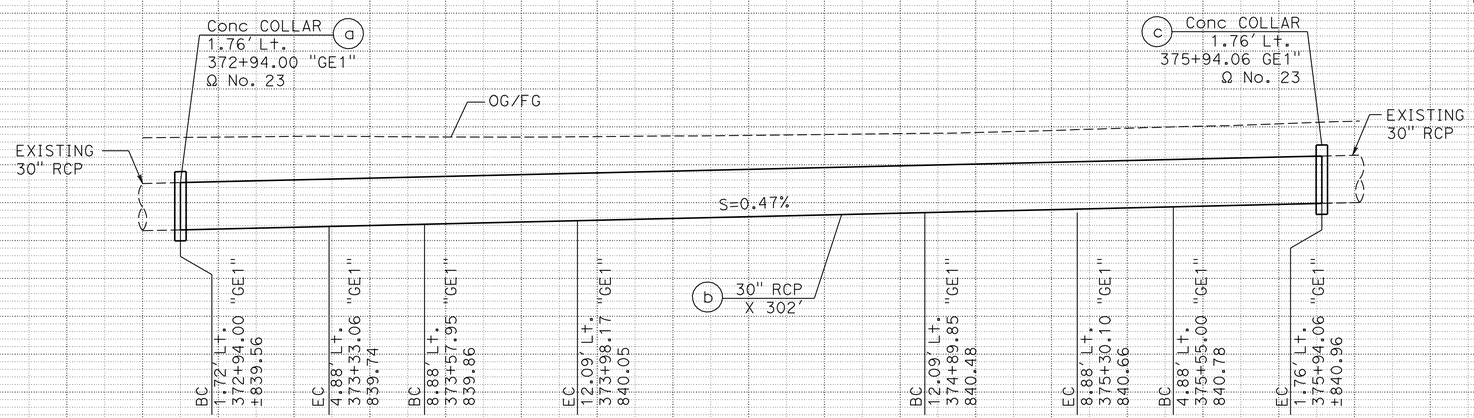

DRAINAGE SYSTEM No. 105

DRAINAGE PROFILES

SCALE: (EXCEPT AS SHOWN)
H - 1"=20'
V - 1"=4'

DP-27

THIS PLAN ACCURATE FOR DRAINAGE WORK ONLY.

STATION		TOTAL
CY	Exc	
	Emb	

STATE OF CALIFORNIA - DEPARTMENT OF TRANSPORTATION
Caltrans® DESIGN

FUNCTIONAL SUPERVISOR: MARK PERTILE
CALCULATED-DESIGNED BY: MOHAMMAD ABDRABOH
CHECKED BY: ALAN R. BISI
REVISED BY / DATE REVISED

LAST REVISION 03-29-11 DATE PLOTTED => 29-APR-2011 TIME PLOTTED => 17:57

Dist	COUNTY	ROUTE	POST MILES TOTAL PROJECT	SHEET No.	TOTAL SHEETS
08	Riv	91	15.6/21.6	266	2028

REGISTERED CIVIL ENGINEER 3-29-10 DATE

4-25-11
PLANS APPROVAL DATE

REGISTERED PROFESSIONAL ENGINEER ALAN R. BISI No. C62808 Exp. 6-30-12 CIVIL STATE OF CALIFORNIA

THE STATE OF CALIFORNIA OR ITS OFFICERS OR AGENTS SHALL NOT BE RESPONSIBLE FOR THE ACCURACY OR COMPLETENESS OF SCANNED COPIES OF THIS PLAN SHEET.

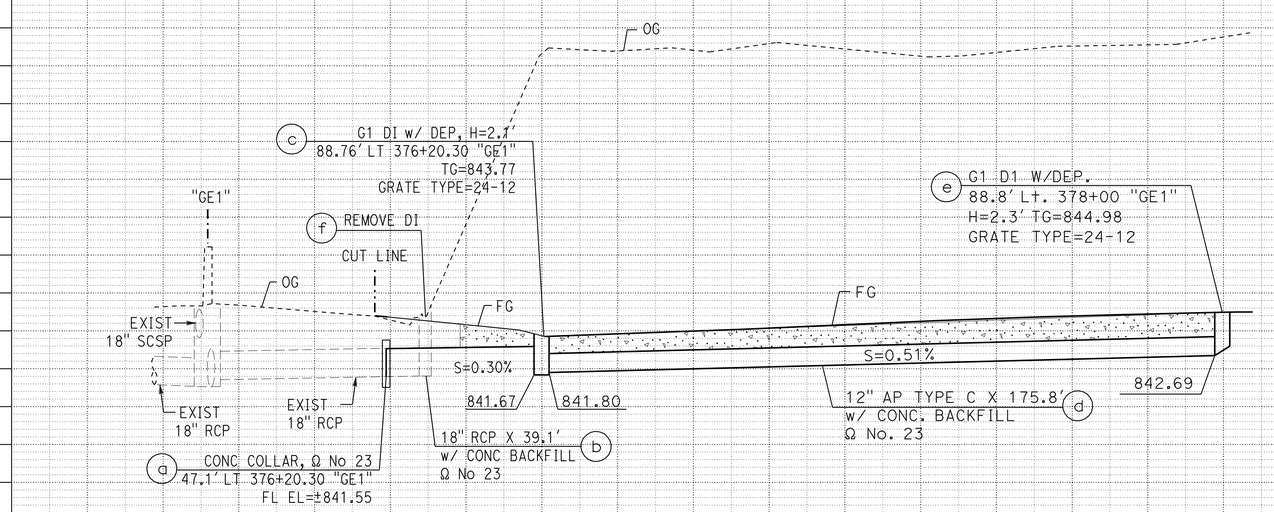

DRAINAGE SYSTEM No. 106

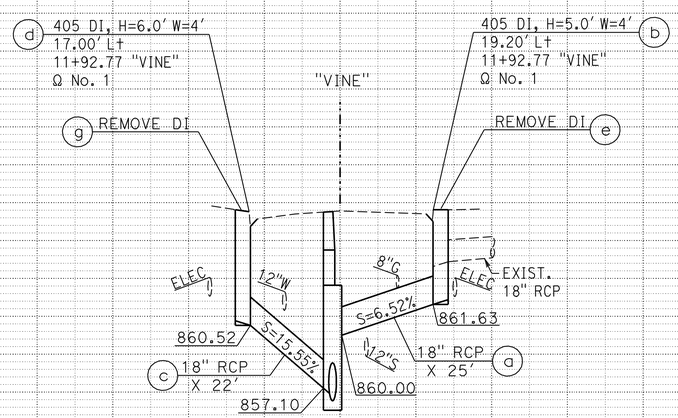

DRAINAGE SYSTEM No. 109

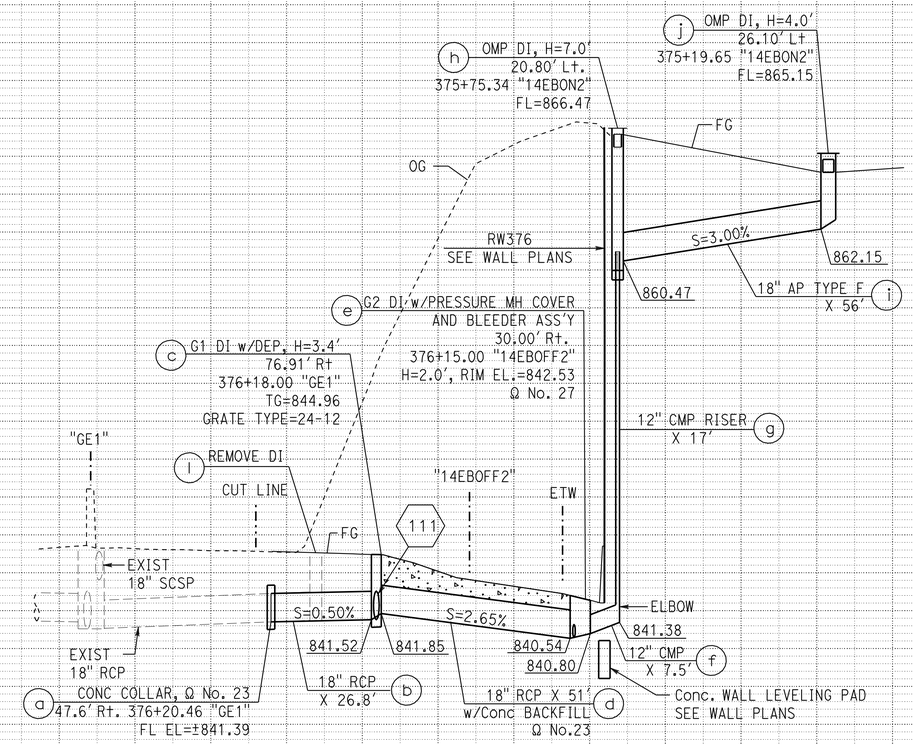

DRAINAGE SYSTEM No. 107

THIS PLAN ACCURATE FOR DRAINAGE WORK ONLY.

DRAINAGE PROFILES

SCALE: (EXCEPT AS SHOWN)
H - 1"=20'
V - 1"=4'

DP-28

STATION		TOTAL
CY	Exc	
	Emb	

STATE OF CALIFORNIA - DEPARTMENT OF TRANSPORTATION
Caltrans® DESIGN

FUNCTIONAL SUPERVISOR: MARK PERTILE
CALCULATED-DESIGNED BY: ALAN R. BISI
CHECKED BY: MOHAMMAD ABDRABOH
REVISED BY / DATE REVISED

LAST REVISION 03-29-11 | DATE PLOTTED => 29-APR-2011 | TIME PLOTTED => 17:57

Dist	COUNTY	ROUTE	POST MILES TOTAL PROJECT	SHEET No.	TOTAL SHEETS
08	Riv	91	15.6/21.6	267	2028

REGISTERED CIVIL ENGINEER 12-1-10 DATE

4-25-11
PLANS APPROVAL DATE

REGISTERED PROFESSIONAL ENGINEER ALAN R. BISI No. C62808 Exp. 6-30-12 CIVIL STATE OF CALIFORNIA

THE STATE OF CALIFORNIA OR ITS OFFICERS OR AGENTS SHALL NOT BE RESPONSIBLE FOR THE ACCURACY OR COMPLETENESS OF SCANNED COPIES OF THIS PLAN SHEET.

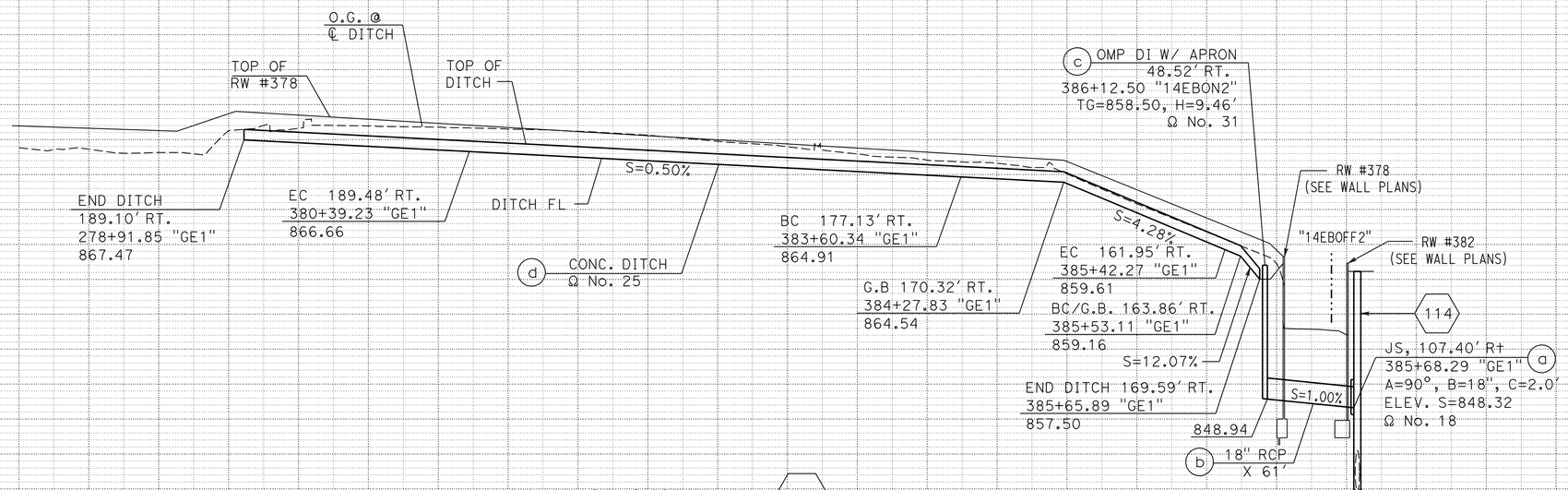

DRAINAGE SYSTEM No. 110

THIS PLAN ACCURATE FOR DRAINAGE WORK ONLY.

DRAINAGE PROFILES

SCALE: (EXCEPT AS SHOWN)
H - 1"=50'
V - 1"=5'

DP-29

STATION		TOTAL
CY	Exc	
	Emb	

STATE OF CALIFORNIA - DEPARTMENT OF TRANSPORTATION
Caltrans® DESIGN
FUNCTIONAL SUPERVISOR: MARK PERTILE
CALCULATED-DESIGNED BY: MOHAMMAD ABDRABOH
CHECKED BY: ALAN R. BISI
REVISED BY
DATE REVISED

LAST REVISION 12-01-10
DATE PLOTTED => 29-APR-2011
TIME PLOTTED => 17:57

Dist	COUNTY	ROUTE	POST MILES TOTAL PROJECT	SHEET No.	TOTAL SHEETS
08	Riv	91	15.6/21.6	268	2028

REGISTERED CIVIL ENGINEER 12-1-10 DATE

4-25-11
PLANS APPROVAL DATE

ALAN R. BISI No. C62808 Exp. 6-30-12 CIVIL — REGISTERED PROFESSIONAL ENGINEER — STATE OF CALIFORNIA

THE STATE OF CALIFORNIA OR ITS OFFICERS OR AGENTS SHALL NOT BE RESPONSIBLE FOR THE ACCURACY OR COMPLETENESS OF SCANNED COPIES OF THIS PLAN SHEET.

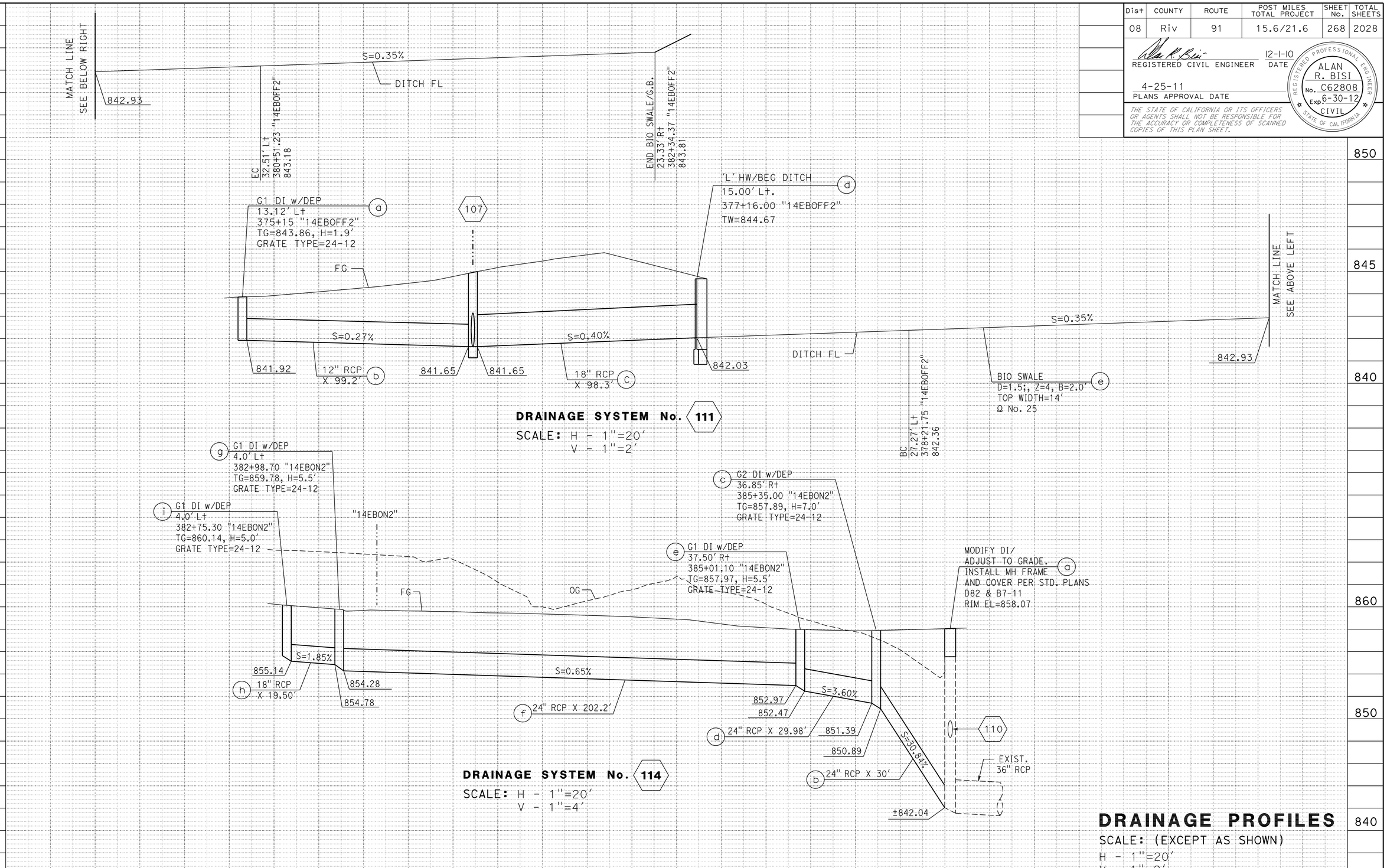

THIS PLAN ACCURATE FOR DRAINAGE WORK ONLY.

DRAINAGE PROFILES

SCALE: (EXCEPT AS SHOWN)
H - 1"=20'
V - 1"=2'

DP-30

STATION		TOTAL
CY	Exc	
	Emb	

STATE OF CALIFORNIA - DEPARTMENT OF TRANSPORTATION
Caltrans® DESIGN

FUNCTIONAL SUPERVISOR: MARK PERTILE
CALCULATED-DESIGNED BY: MOHAMMAD ABDRABOH
CHECKED BY: ALAN R. BISI
REVISED BY / DATE REVISED

LAST REVISION DATE PLOTTED => 29-APR-2011
12-01-10 TIME PLOTTED => 17:57

Dist	COUNTY	ROUTE	POST MILES TOTAL PROJECT	SHEET No.	TOTAL SHEETS
08	Riv	91	15.6/21.6	269	2028

REGISTERED CIVIL ENGINEER 3-29-10 DATE

4-25-11
PLANS APPROVAL DATE

REGISTERED PROFESSIONAL ENGINEER ALAN R. BISI No. C62808 Exp. 6-30-12 CIVIL STATE OF CALIFORNIA

THE STATE OF CALIFORNIA OR ITS OFFICERS OR AGENTS SHALL NOT BE RESPONSIBLE FOR THE ACCURACY OR COMPLETENESS OF SCANNED COPIES OF THIS PLAN SHEET.

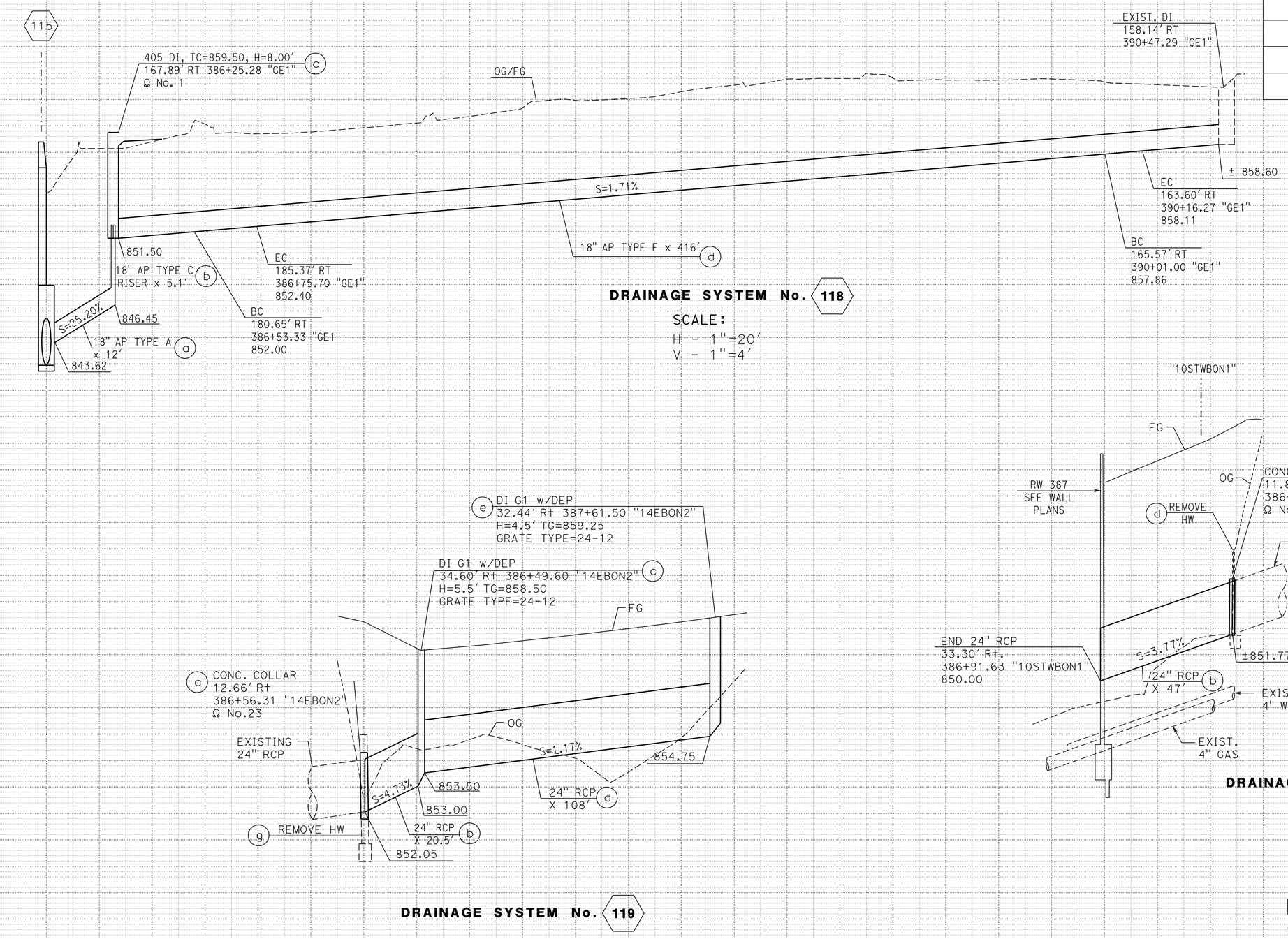

THIS PLAN ACCURATE FOR DRAINAGE WORK ONLY.

DRAINAGE PROFILES

SCALE: (EXCEPT AS SHOWN)
H - 1"=20'
V - 1"=2'

DP-31

STATION		TOTAL
CY	Exc	
	Emb	

REVISED BY / DATE REVISED
MOHAMMAD ABDRABOH / ALAN R. BISI
CALCULATED-DESIGNED BY / CHECKED BY
FUNCTIONAL SUPERVISOR: MARK PERTILE

STATE OF CALIFORNIA - DEPARTMENT OF TRANSPORTATION
Caltrans DESIGN

LAST REVISION 03-29-11 DATE PLOTTED => 29-APR-2011 TIME PLOTTED => 17:57

Dist	COUNTY	ROUTE	POST MILES TOTAL PROJECT	SHEET No.	TOTAL SHEETS
08	Riv	91	15.6/21.6	270	2028

REGISTERED CIVIL ENGINEER 12-1-10 DATE

4-25-11
PLANS APPROVAL DATE

REGISTERED PROFESSIONAL ENGINEER ALAN R. BISI No. C62808 Exp. 6-30-12 CIVIL STATE OF CALIFORNIA

THE STATE OF CALIFORNIA OR ITS OFFICERS OR AGENTS SHALL NOT BE RESPONSIBLE FOR THE ACCURACY OR COMPLETENESS OF SCANNED COPIES OF THIS PLAN SHEET.

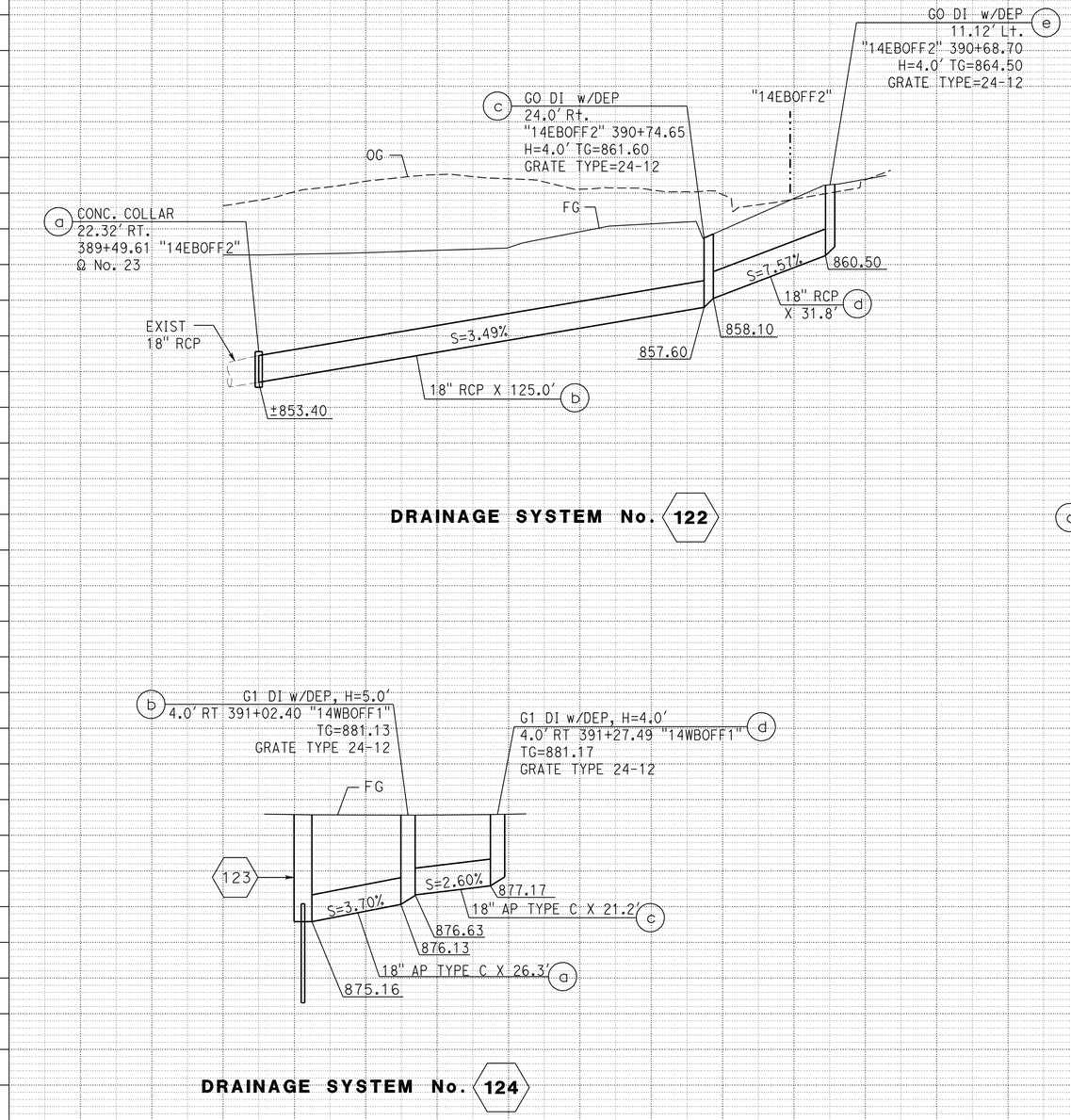

DRAINAGE SYSTEM No. 122

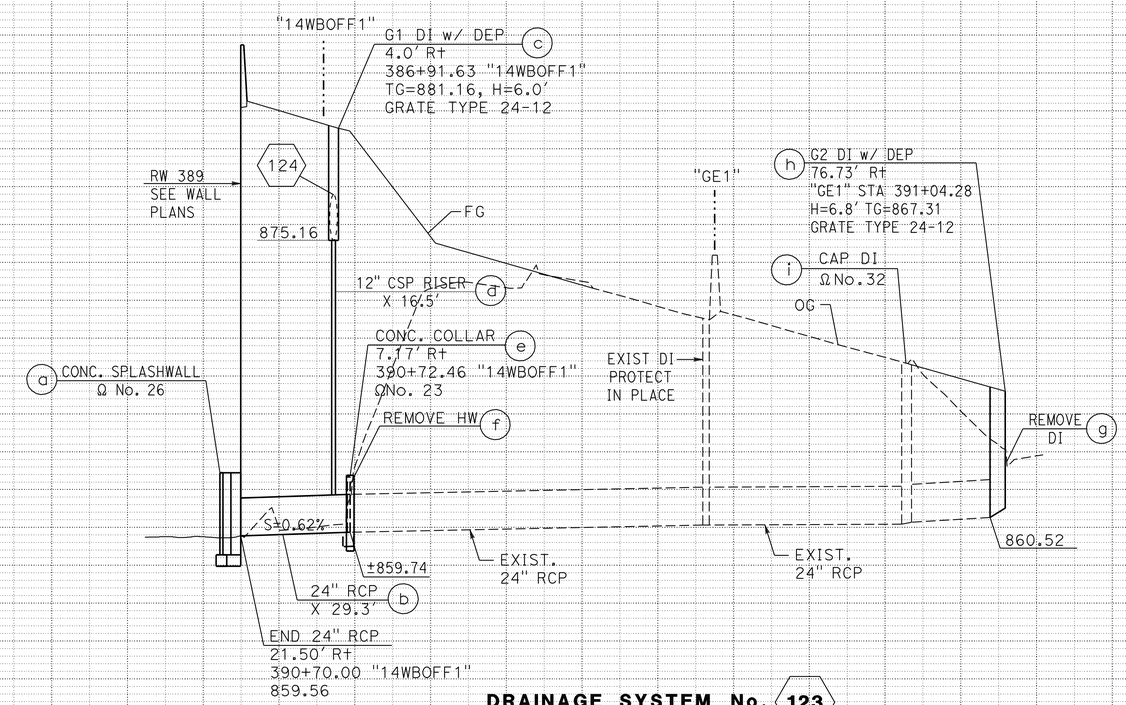

DRAINAGE SYSTEM No. 123

DRAINAGE SYSTEM No. 124

THIS PLAN ACCURATE FOR DRAINAGE WORK ONLY.

DRAINAGE PROFILES

SCALE: (EXCEPT AS SHOWN)
H - 1"=20'
V - 1"=4'

DP-32

STATION		TOTAL
CY	Exc	
	Emb	

STATE OF CALIFORNIA - DEPARTMENT OF TRANSPORTATION
Caltrans DESIGN

FUNCTIONAL SUPERVISOR: MARK PERTILE
CALCULATED-DESIGNED BY: MOHAMMAD ABDRABOH
CHECKED BY: ALAN R. BISI
REVISED BY / DATE REVISED

LAST REVISION DATE PLOTTED => 29-APR-2011
12-01-10 TIME PLOTTED => 17:57

Dist	COUNTY	ROUTE	POST MILES TOTAL PROJECT	SHEET No.	TOTAL SHEETS
08	Riv	91	15.6/21.6	271	2028

REGISTERED CIVIL ENGINEER 4-11-10 DATE

4-25-11
PLANS APPROVAL DATE

REGISTERED PROFESSIONAL ENGINEER ALAN R. BISI No. C62808 Exp. 6-30-12 CIVIL STATE OF CALIFORNIA

THE STATE OF CALIFORNIA OR ITS OFFICERS OR AGENTS SHALL NOT BE RESPONSIBLE FOR THE ACCURACY OR COMPLETENESS OF SCANNED COPIES OF THIS PLAN SHEET.

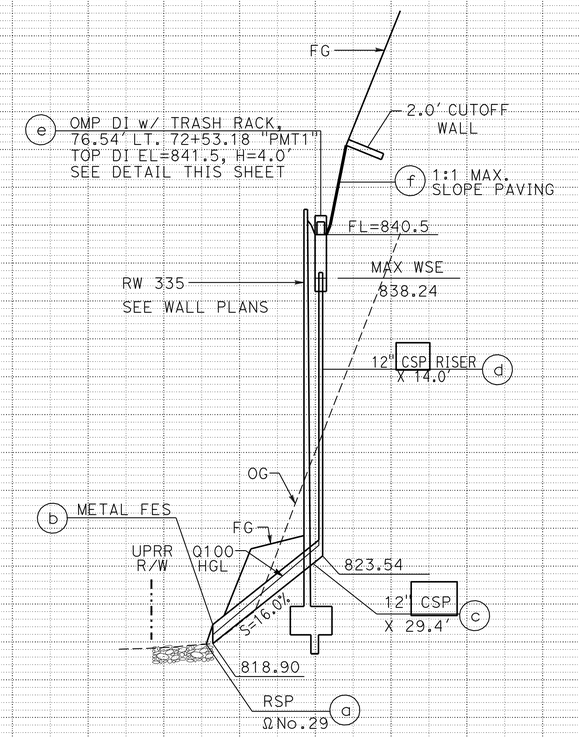

DRAINAGE SYSTEM No. 127

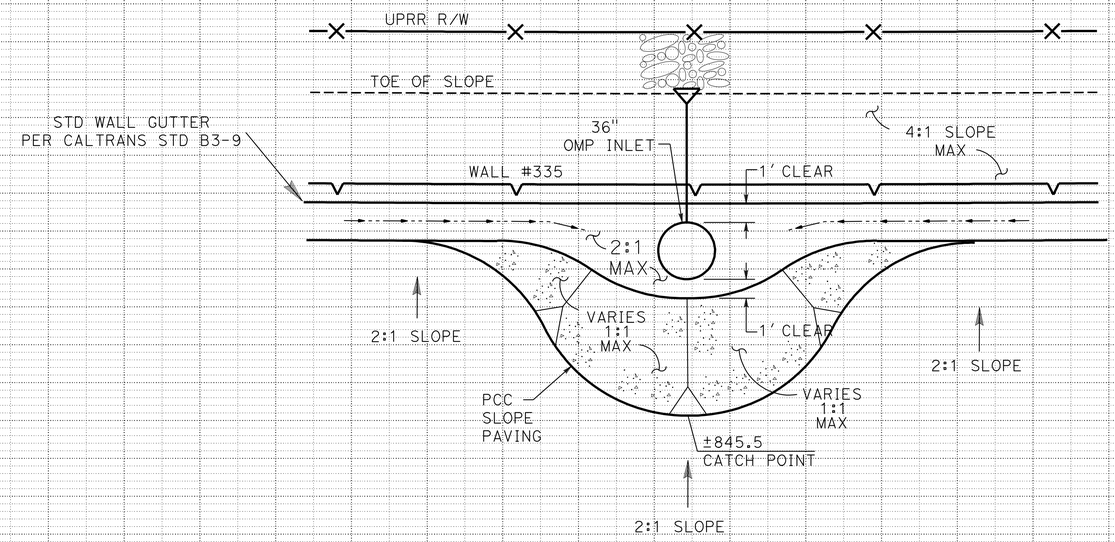

PLAN VIEW DETAIL
DRAINAGE SYSTEM 127
NO SCALE

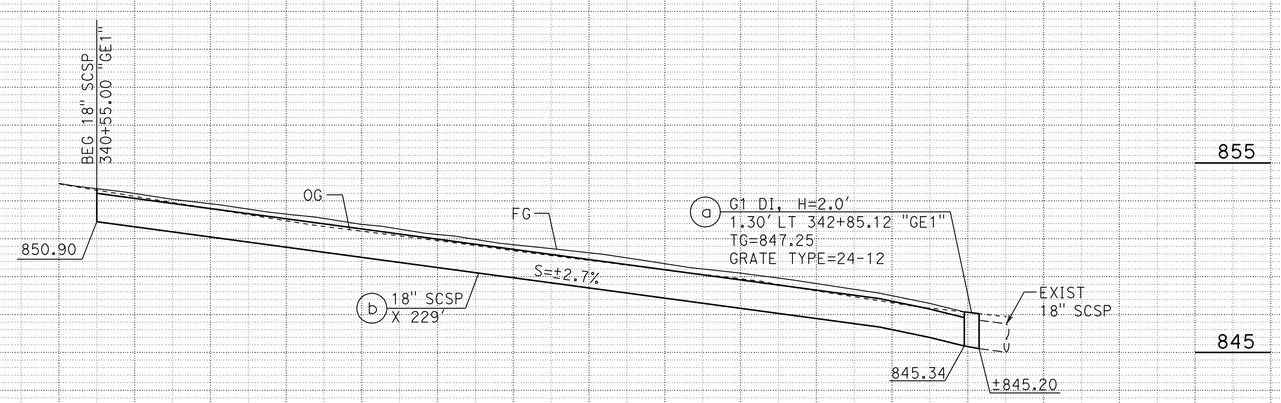

DRAINAGE SYSTEM No. 129

DRAINAGE PROFILES

SCALE: (EXCEPT AS SHOWN)
H - 1"=20'
V - 1"=4'

DP-33

THIS PLAN ACCURATE FOR DRAINAGE WORK ONLY.

STATION		TOTAL
CY	Exc	
	Emb	

STATE OF CALIFORNIA - DEPARTMENT OF TRANSPORTATION
Caltrans® DESIGN

FUNCTIONAL SUPERVISOR: MARK PERTILE
CALCULATED-DESIGNED BY: MOHAMMAD ABDRABOH
CHECKED BY: ALAN R. BISI
REVISED BY / DATE REVISED

LAST REVISION 04-11-11
DATE PLOTTED => 29-APR-2011
TIME PLOTTED => 17:57

Dist	COUNTY	ROUTE	POST MILES TOTAL PROJECT	SHEET No.	TOTAL SHEETS
08	Riv	91	15.6/21.6	272	2028

REGISTERED CIVIL ENGINEER 4-11-10 DATE

4-25-11
PLANS APPROVAL DATE

REGISTERED PROFESSIONAL ENGINEER ALAN R. BISI No. C62808 Exp. 6-30-12 CIVIL STATE OF CALIFORNIA

THE STATE OF CALIFORNIA OR ITS OFFICERS OR AGENTS SHALL NOT BE RESPONSIBLE FOR THE ACCURACY OR COMPLETENESS OF SCANNED COPIES OF THIS PLAN SHEET.

NOTE:

1. CONTRACTOR TO REPLACE EXISTING ACCESS HATCH WITH EQUIVALENT UNIT PER DIRECTION OF ENGINEER. REPLACEMENT UNIT SHALL BE NYSTROM PRODUCTS Co ALUMINUM FH SERIES WITH H-20 LOAD CAPACITY RATING OR SIMILAR.
2. ACCESS HATCH TO BE LOCATED IN CENTER OF STRUCTURE ROOF. FINAL LOCATION OF ACCESS HATCH AND VENT PIPE TO BE DETERMINED BY ENGINEER.
3. PROPOSED 6'X4' RCB EXTENTION SHALL BE PER CALTRANS STD. PLAN D80 SINGLE CELL RCB WITH MEMBER THICKNESS AND REINFORCEMENT FOR 20' MAXIMUM COVER. SPACING FOR "a" AND "e" BARS SHALL BE CHANGED FROM 5" TO 4".
4. REMOVAL LIMITS FOR EXISTING RCB SHALL BE FROM 39.0' RT 82+91.32 "IMT2" TO CL INTERSECTION STA 83+62.50 "IMT2". FINAL REMOVAL LIMITS MAY BE ADJUSTED AS DIRECTED BY ENGINEER.

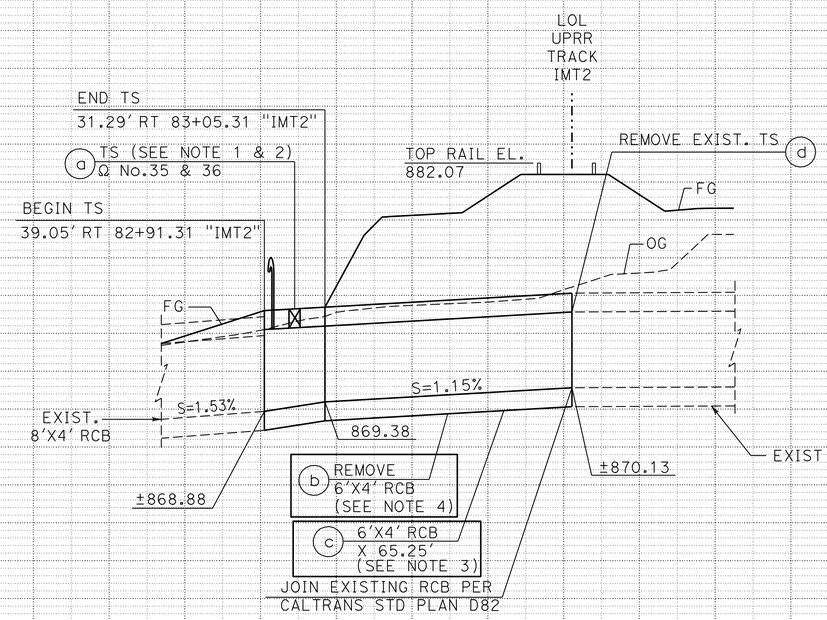

DRAINAGE SYSTEM No. 130

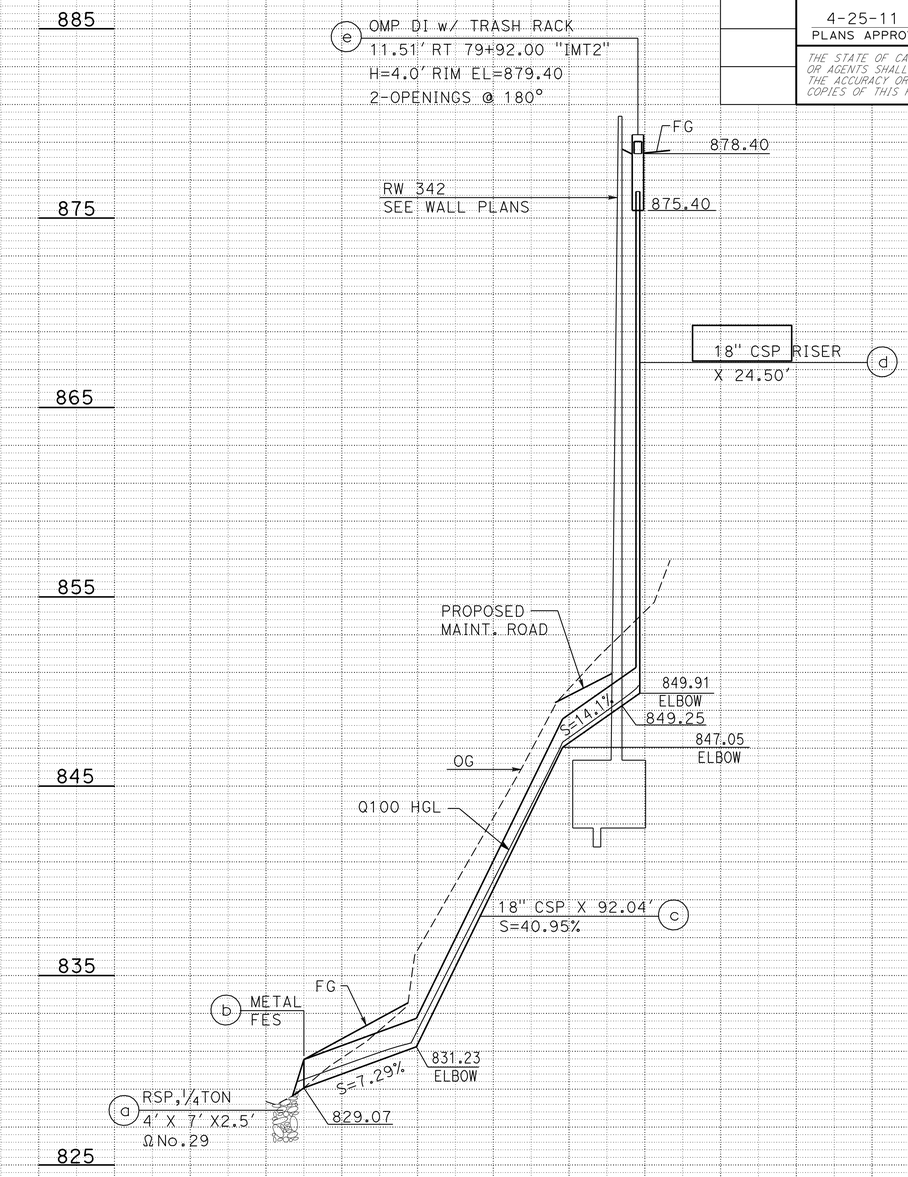

DRAINAGE SYSTEM No. 131

DRAINAGE PROFILES

SCALE: (EXCEPT AS SHOWN)
H - 1"=20'
V - 1"=4'

DP-34

THIS PLAN ACCURATE FOR DRAINAGE WORK ONLY.

STATION		11+00	20	40	60	80	12+00	20	10+00	11+00	TOTAL
CY	Exc										
	Emb										

REVISED BY | DATE REVISED
MOHAMMAD ABDRABOH | ALAN R. BISI
CALCULATED-DESIGNED BY | CHECKED BY
FUNCTIONAL SUPERVISOR | MARK PERTILE
STATE OF CALIFORNIA - DEPARTMENT OF TRANSPORTATION
Caltrans® DESIGN

LAST REVISION 04-11-11 | DATE PLOTTED => 29-APR-2011 | TIME PLOTTED => 17:58

Dist	COUNTY	ROUTE	POST MILES TOTAL PROJECT	SHEET No.	TOTAL SHEETS
08	Riv	91	15.6/21.6	273	2028

REGISTERED CIVIL ENGINEER 3-29-10 DATE

4-25-11
PLANS APPROVAL DATE

REGISTERED PROFESSIONAL ENGINEER ALAN R. BISI No. C62808 Exp. 6-30-12 CIVIL STATE OF CALIFORNIA

THE STATE OF CALIFORNIA OR ITS OFFICERS OR AGENTS SHALL NOT BE RESPONSIBLE FOR THE ACCURACY OR COMPLETENESS OF SCANNED COPIES OF THIS PLAN SHEET.

NOTE:

1. MAINTENANCE VALVE TO BE CENTERED WITHIN TOP OF BERM, IF APPLICABLE, WITH VALVE COVER SET 4" Min ABOVE FG AS DIRECTED BY ENGINEER. VALVE LOCATION SHALL BE MARKED WITH OBJECT MARKER.

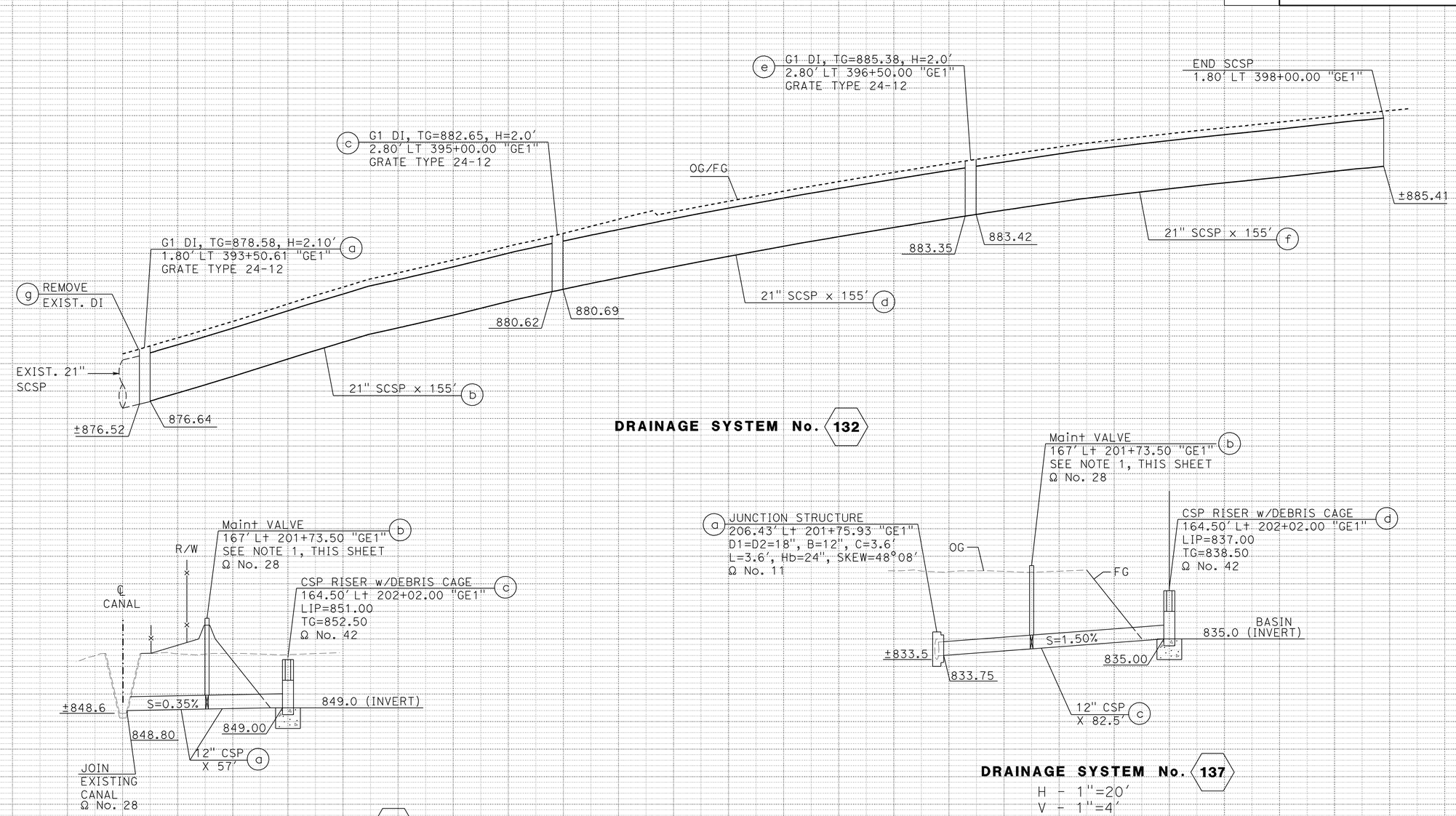

DRAINAGE PROFILES

SCALE: (EXCEPT AS SHOWN)
H - 1"=20'
V - 1"=2'

DP-35

THIS PLAN ACCURATE FOR DRAINAGE WORK ONLY.

STATION		TOTAL
CY	Exc	
	Emb	

STATE OF CALIFORNIA - DEPARTMENT OF TRANSPORTATION
Caltrans DESIGN
FUNCTIONAL SUPERVISOR MARK PERTILE
CALCULATED-DESIGNED BY MOHAMMAD ABDRABOH
CHECKED BY ALAN R. BISI
REVISED BY
DATE REVISED

LAST REVISION 03-29-11 DATE PLOTTED => 29-APR-2011 TIME PLOTTED => 17:58

Dist	COUNTY	ROUTE	POST MILES TOTAL PROJECT	SHEET No.	TOTAL SHEETS
08	Riv	91	15.6/21.6	274	2028

REGISTERED CIVIL ENGINEER 3-29-10 DATE

4-25-11
PLANS APPROVAL DATE

REGISTERED PROFESSIONAL ENGINEER ALAN R. BISI No. C62808 Exp. 6-30-12 CIVIL STATE OF CALIFORNIA

THE STATE OF CALIFORNIA OR ITS OFFICERS OR AGENTS SHALL NOT BE RESPONSIBLE FOR THE ACCURACY OR COMPLETENESS OF SCANNED COPIES OF THIS PLAN SHEET.

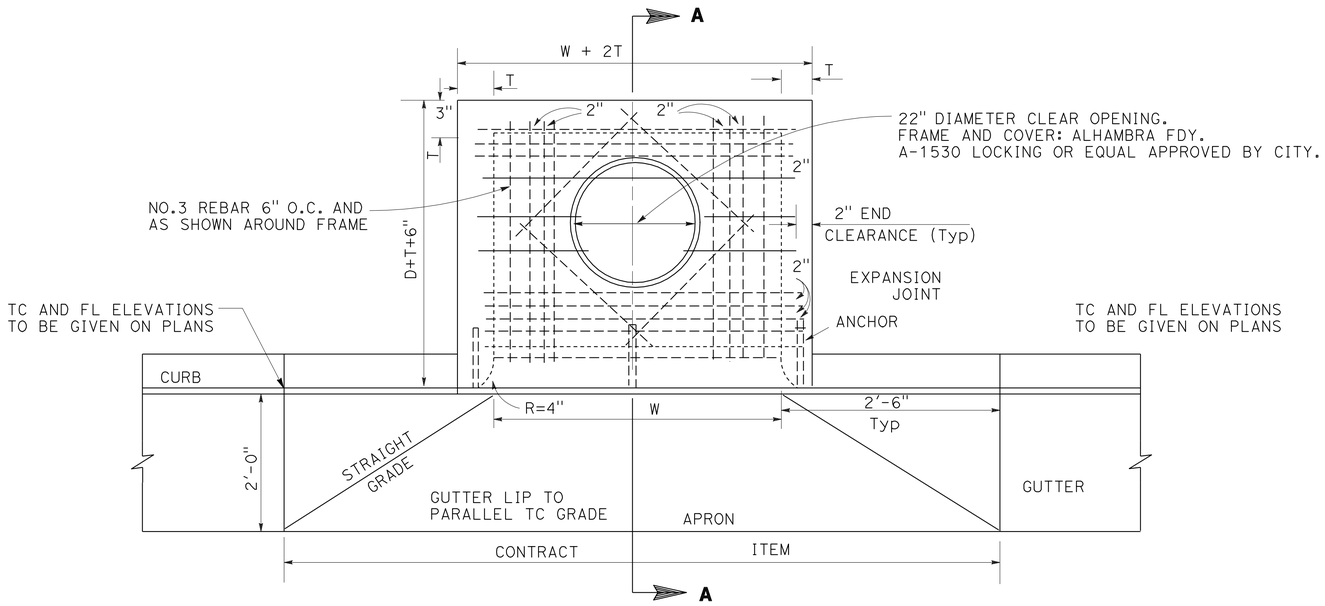

TOP VIEW

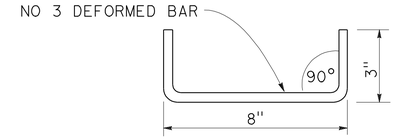

DOWEL DETAIL

TO BE USED WHEN TOP IS
POURED SEPARATE ONE AT EACH
CORNER

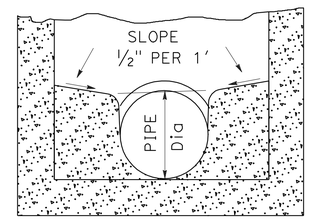

CHANNEL DETAIL

DRAINAGE SYSTEMS APPLICABLE TO THIS SHEET		
35a	59c	65c
76c	78c	78e
89c	92c	109b
109d	118c	

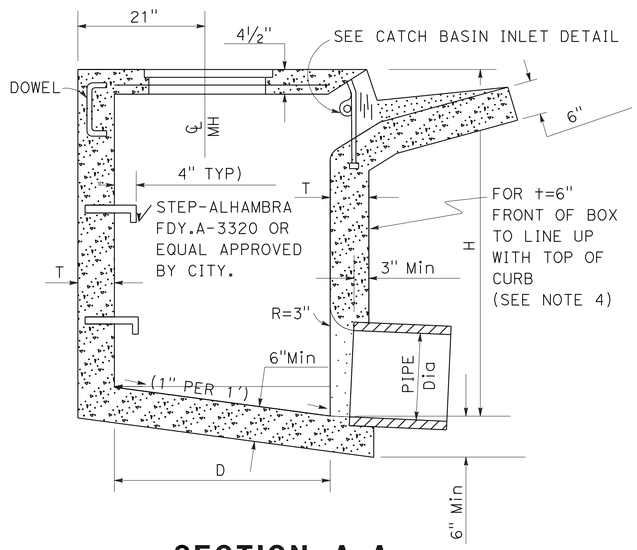

SECTION A-A

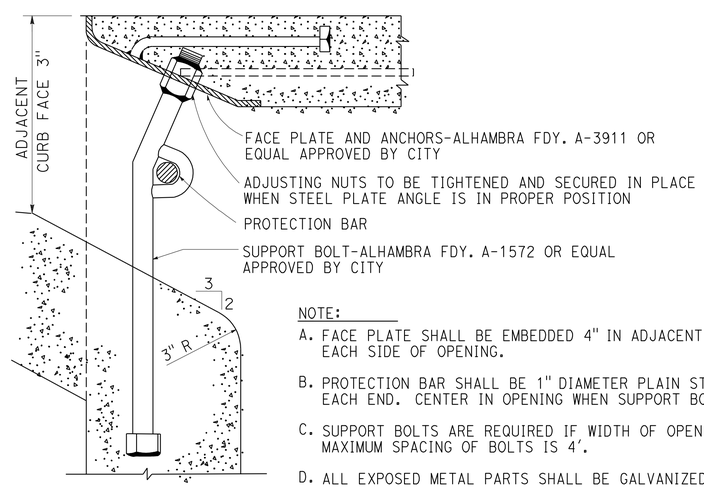

NOTE:

A. FACE PLATE SHALL BE EMBEDDED 4" IN ADJACENT CURB ON EACH SIDE OF OPENING.

B. PROTECTION BAR SHALL BE 1" DIAMETER PLAIN STEEL. EMBED 5" AT EACH END. CENTER IN OPENING WHEN SUPPORT BOLTS ARE NOT USED.

C. SUPPORT BOLTS ARE REQUIRED IF WIDTH OF OPENING EXCEEDS 5'. MAXIMUM SPACING OF BOLTS IS 4'.

D. ALL EXPOSED METAL PARTS SHALL BE GALVANIZED.

CATCH BASIN INLET
DRAINAGE INLET CITY OF RIVERSIDE-TYPE 405

NOTES

1. CONCRETE SHALL BE MINOR CONCRETE.
2. CONNECTOR PIPE SHALL BE HORIZONTALLY CENTERED ON THE WALL OF THE CATCH BASIN WHICH FACES THE CONNECTOR PIPE.
3. CURVATURE OF THE LIP AND SIDEWALLS AT THE OPENING SHALL BE FORMED BY CURVED FORM AND SHALL NOT BE MADE BY PLASTERING.
4. DIMENSIONS:
   W SHALL BE AS SPECIFIED ON THE PLAN OR 4' MIN.
   H SHALL BE AS SPECIFIED ON THE PLAN.
   D= 3' UNLESS OTHERWISE SPECIFIED ON THE PLAN.
   T=6" IF H IS 4' OR LESS.
   T= 8" IF H IS BETWEEN 4' AND 8'.
   T=10" IF H IS 8' OR MORE.
   THICKNESS OF THE WALL UNDER THE OPENING SHALL BE T + 2" WHEN W EXCEEDS 7'-0".
   T>6", WIDENING OF WALL SHALL BE ON STREET SIDE.
5. CHANNEL SHALL BE CONSTRUCTED IN CATCH BASINS HAVING INLET PIPES WHERE H MINUS SHELF HEIGHT IS LESS THAN 2½' THE CHANNEL MAY BE OMITTED.
6. STEP SPACING:
   IF H IS 3.5' OR LESS, NO STEPS ARE REQUIRED.
   IF H IS MORE THAN 3.5' AND NOT MORE THAN 4', INSTALL 1 STEP 12" ABOVE THE FLOOR.
   IF H IS MORE THAN 4', INSTALL STEPS 12" APART WITH THE TOP STEP 20" TO 24" BELOW THE TOP SURFACE OF THE BASIN.
   WHEN THE BASIN HAS A CHANNEL USE H MINUS SHELF HEIGHT TO DETERMINE STEP SPACING.
7. PIPES SHALL BE TRIMMED TO THE FINAL SHAPE AND LENGTH BEFORE CONCRETE IS POURED.
8. SURFACE OF ALL EXPOSED CONCRETE IN BASIN SHALL CONFORM IN SLOPE, GRADE COLOR, FINISH AND SCORING TO EXISTING OR PROPOSED CURB AND WALK ADJACENT TO THE BASIN AND SHALL BE FREE FROM PROTRUDING WIRES AND NAILS. FLOOR OF CHANNEL SHALL BE GIVEN A STEEL-TROWELED FINISH.
9. TOP OF BASIN SHALL SLOPE 2% TOWARDS CURB EXCEPT WHEN OTHERWISE SHOWN ON THE PLAN OR TO FIT EXISTING SIDEWALK. TOP SHALL BE POURED MONOLITHIC WITH SIDEWALK IF CURB SIDEWALK IS USED.
10. THE INLET IS PER MODIFIED CITY OF RIVERSIDE CATCH BASIN, STANDARD DRAWING NO. 405.

DRAINAGE DETAILS

NO SCALE

DD-1

THIS PLAN ACCURATE FOR DRAINAGE WORK ONLY.

STATE OF CALIFORNIA - DEPARTMENT OF TRANSPORTATION
Caltrans® DESIGN

FUNCTIONAL SUPERVISOR: MARK PERTILE
CALCULATED-DESIGNED BY: MOHAMMAD ABDRABOH
CHECKED BY: ALAN R. BISI
REVISED BY
DATE REVISED

LAST REVISION 03-29-11 | DATE PLOTTED => 29-APR-2011 | TIME PLOTTED => 17:58

DELETE FROM PLANS

Dist	COUNTY	ROUTE	POST MILES TOTAL PROJECT	SHEET No.	TOTAL SHEETS
08	Riv	91	15.6/21.6	275	2028

REGISTERED CIVIL ENGINEER 3-29-10 DATE

4-25-11
PLANS APPROVAL DATE

REGISTERED PROFESSIONAL ENGINEER ALAN R. BISI No. C62808 Exp. 6-30-12 CIVIL STATE OF CALIFORNIA

THE STATE OF CALIFORNIA OR ITS OFFICERS OR AGENTS SHALL NOT BE RESPONSIBLE FOR THE ACCURACY OR COMPLETENESS OF SCANNED COPIES OF THIS PLAN SHEET.

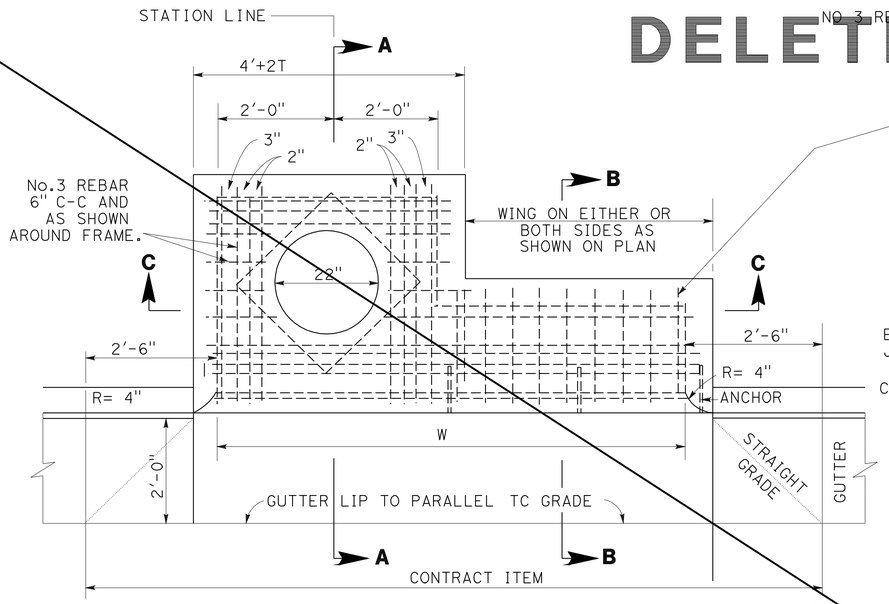

PLAN VIEW

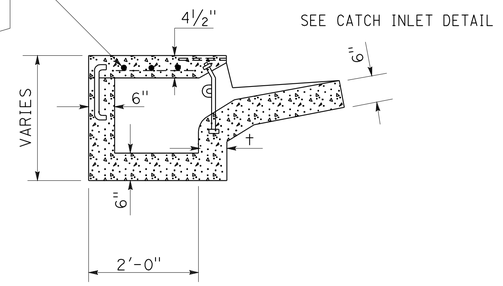

SECTION B-B

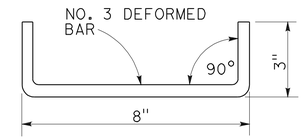

DOWEL DETAIL

TO BE USED WHEN TOP IS POURED SEPARATE ONE AT EACH CORNER.

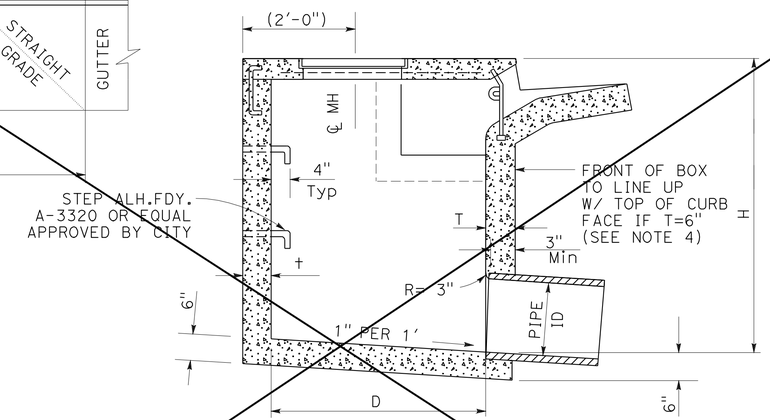

SECTION A-A

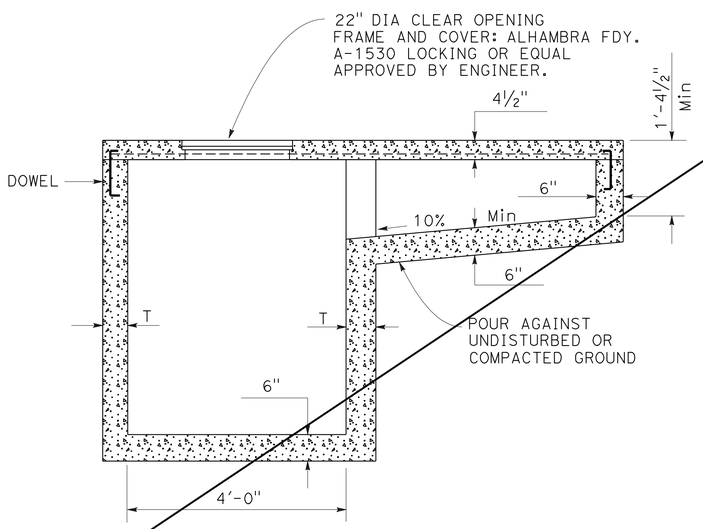

SECTION C-C

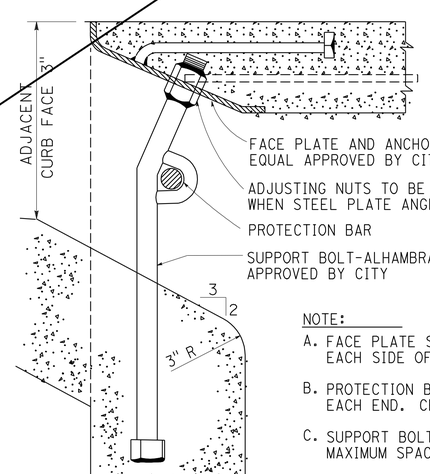

NOTE:

A. FACE PLATE SHALL BE EMBEDDED 4" IN ADJACENT CURB ON EACH SIDE OF OPENING.

B. PROTECTION BAR SHALL BE 1" DIAMETER PLAIN STEEL. EMBED 5" AT EACH END. CENTER IN OPENING WHEN SUPPORT BOLTS ARE NOT USED.

C. SUPPORT BOLTS ARE REQUIRED IF WIDTH OF OPENING EXCEEDS 5'. MAXIMUM SPACING OF BOLTS IS 4'.

D. ALL EXPOSED METAL PARTS SHALL BE GALVANIZED.

CATCH BASIN INLET

NOTES

1. CONCRETE SHALL BE MINOR CONCRETE.
2. CONNECTOR PIPE SHALL BE HORIZONTALLY CENTERED ON THE WALL OF THE DEEP PORTION OF THE CATCH BASIN WHICH FACES THE CONNECTOR PIPE.
3. CURVATURE OF THE LIP AND SIDEWALLS AT THE OPENING SHALL BE FORMED BY CURVED FORMS AND SHALL NOT BE MADE BY PLASTERING.
4. DIMENSIONS:
   W SHALL BE AS SPECIFIED ON THE PLAN OR 8' MIN.
   H SHALL BE AS SPECIFIED ON THE PLAN.
   D=3' UNLESS OTHERWISE SPECIFIED ON THE PLAN.
   t=6" IF H IS 4' OR LESS.
   t=8" IF H IS BETWEEN 4' AND 8'.
   t=10" IF H IS 8' OR MORE.
   t>6", WIDENING OF WALL SHALL BE ON STREET SIDE.
5. CHANNEL SHALL BE CONSTRUCTED IN CATCH BASINS HAVING INLET PIPES. WHERE H MINUS SHELF HEIGHT IS LESS THAN 2½' THE CHANNEL MAY BE OMITTED. SEE DRAINAGE DETAIL No. 1 FOR CHANNEL DETAIL.
6. STEP SPACING:
   IF H IS 3.5' OR LESS, NO STEPS ARE REQUIRED.
   IF H IS MORE THAN 3.5' AND NOT MORE THAN 4', INSTALL ONE STEP 12" ABOVE THE FLOOR. IF H IS MORE THAN 4', INSTALL STEPS 12" APART WITH THE TOP STEP 20" TO 24" BELOW THE TOP SURFACE OF THE BASIN. WHEN THE BASIN HAS A CHANNEL USE H MINUS SHELF HEIGHT TO DETERMINE STEP SPACING.
7. PIPES SHALL BE TRIMMED TO THE FINAL SHAPE AND LENGTH BEFORE CONCRETE IS POURED.
8. SURFACE OF ALL EXPOSED CONCRETE IN BASIN SHALL CONFORM IN SLOPE, GRADE, COLOR, FINISH AND SCORING TO EXISTING OR PROPOSED CURB AND WALK ADJACENT TO THE BASIN AND SHALL BE FREE FROM PROTRUDING WIRES AND NAILS. FLOOR OF CHANNEL SHALL BE GIVEN A STEEL-TROWELED FINISH.
9. TOP OF BASIN SHALL SLOPE 2% TOWARD CURB EXCEPT WHEN OTHERWISE SHOWN ON THE PLAN OR TO FIT EXISTING SIDEWALK. TOP SHALL BE POURED MONOLITHIC WITH SIDEWALK IF CURB SIDEWALK IS USED.
10. THE INLET IS PER MODIFIED CITY OF RIVERSIDE CATCH BASIN, STANDARD DRAWING NO. 407.

DRAINAGE INLET-CITY OF RIVERSIDE TYPE 407

THIS PLAN ACCURATE FOR DRAINAGE WORK ONLY.

DRAINAGE DETAILS

NO SCALE

DD-2

STATE OF CALIFORNIA - DEPARTMENT OF TRANSPORTATION
Caltrans® DESIGN

FUNCTIONAL SUPERVISOR: MARK PERTILE
CALCULATED-DESIGNED BY: MOHAMMAD ABDRABOH
CHECKED BY: ALAN R. BISI
REVISED BY
DATE REVISED

LAST REVISION 03-29-11
DATE PLOTTED => 29-APR-2011
TIME PLOTTED => 17:58

Dist	COUNTY	ROUTE	POST MILES TOTAL PROJECT	SHEET No.	TOTAL SHEETS
08	Riv	91	15.6/21.6	276	2028

REGISTERED CIVIL ENGINEER 3-29-10 DATE

4-25-11
PLANS APPROVAL DATE

REGISTERED PROFESSIONAL ENGINEER ALAN R. BISI No. C62808 Exp. 6-30-12 CIVIL STATE OF CALIFORNIA

THE STATE OF CALIFORNIA OR ITS OFFICERS OR AGENTS SHALL NOT BE RESPONSIBLE FOR THE ACCURACY OR COMPLETENESS OF SCANNED COPIES OF THIS PLAN SHEET.

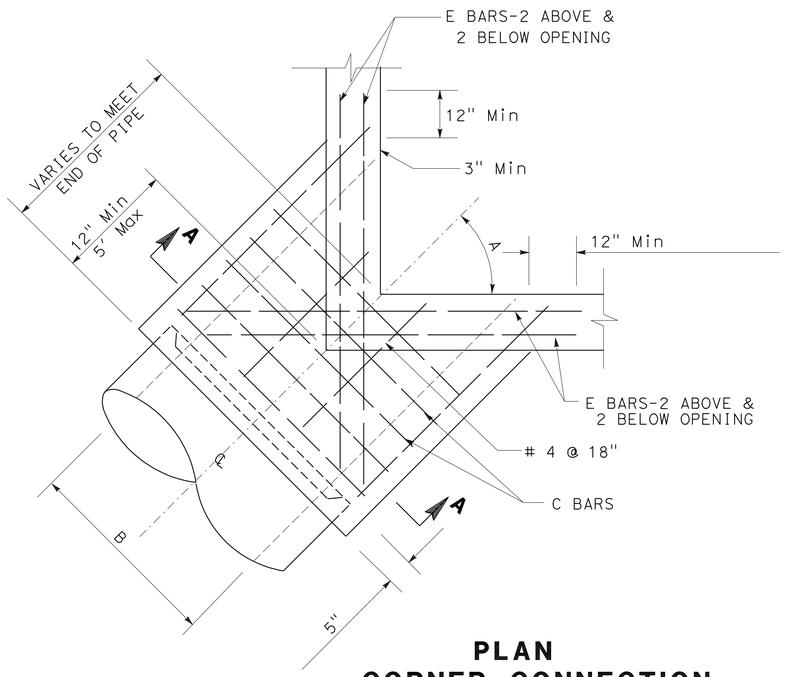

PLAN
CORNER CONNECTION

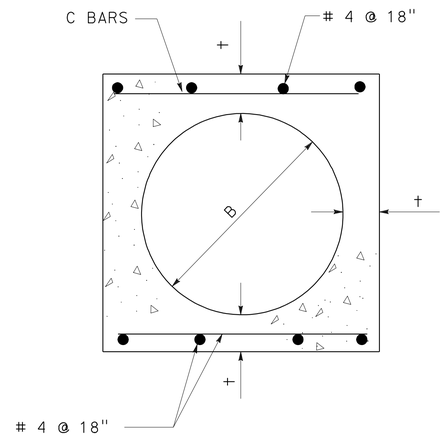

SECTION A-A

STRUCTURAL DATA

B	t	C BARS	D&E BARS	B	t	C BARS	D&E BARS
(12")	(4")	#4 @ 6"	# 5	(42")	(7½")	#5 @ 6"	# 6
(15")	(4¼")			(45")	(7¾")		
(18")	(4½")			(48")	(8")		
(21")	(5")			(51")	(8½")		
(24")	(5¼")			(54")	(9")		
(27")	(5½")			(57")	(9¼")		
(30")	(6")			(60")	(9½")		
(33")	(6¼")			(63")	(10")		
(36")	(6½")			(66")	(10¼")		
(39")	(7")			(69")	(10¾")		
				(72")	(11")		

NOTES

1. REINFORCING STEEL SHALL BE 1½" CLEAR FROM FACE OF CONCRETE UNLESS OTHERWISE SHOWN.
2. REINFORCING STEEL FOR INSIDE FACE OF CATCH BASIN SHALL BE CUT AT CENTER OF OPENING AND BENT INTO WALLS OF MONOLITHIC CATCH BASIN CONNECTION. REINFORCING STEEL FOR OUTSIDE FACE OF CATCH BASIN SHALL BE CUT 2" CLEAR OF OPENING.
3. CONNECTION SHALL BE PLACED MONOLITHIC WITH CATCH BASIN. THE ROUNDED EDGE OF OUTLET SHALL BE CONSTRUCTED BY PLACING CONCRETE WITH THE SAME CLASS OF CONCRETE AS THE CATCH BASIN AGAINST A CURVED FORM WITH A RADIUS OF 3".
4. CONNECTIONS SHALL BE CONSTRUCTED WHEN:
   (A) PIPES INLET OR OUTLET THROUGH CORNER OF CATCH BASIN
   (B) ANGLE A FOR PIPES THROUGH 30" IN DIAMETER IS LESS THAN 70 DEGREES OR GREATER THAN 110 DEGREES.

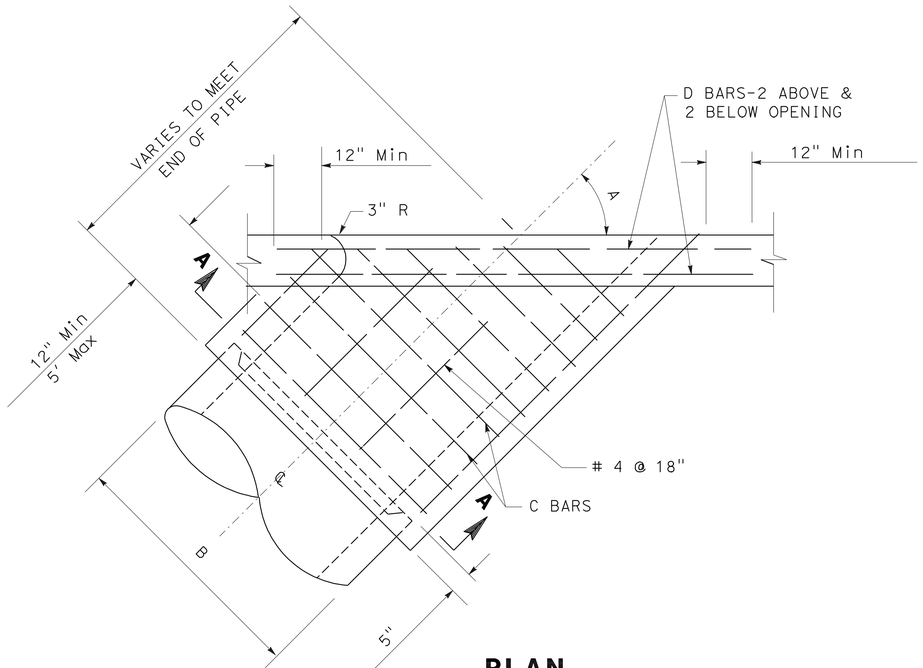

PLAN
SIDE CONNECTION

MONOLITHIC CATCH BASIN CONNECTION

THIS PLAN ACCURATE FOR DRAINAGE WORK ONLY.

DRAINAGE DETAILS

NO SCALE

DD-3

STATE OF CALIFORNIA - DEPARTMENT OF TRANSPORTATION
Caltrans® DESIGN

FUNCTIONAL SUPERVISOR: MARK PERTILE
CALCULATED-DESIGNED BY: MOHAMMAD ABDRABOH
CHECKED BY: ALAN R. BISI
REVISED BY / DATE REVISED

LAST REVISION 03-29-11
DATE PLOTTED => 29-APR-2011
TIME PLOTTED => 17:58

Dist	COUNTY	ROUTE	POST MILES TOTAL PROJECT	SHEET No.	TOTAL SHEETS
08	Riv	91	15.6/21.6	277	2028

REGISTERED CIVIL ENGINEER — DATE 12-1-10

4-25-11
PLANS APPROVAL DATE

REGISTERED PROFESSIONAL ENGINEER — ALAN R. BISI — No. C62808 — Exp. 6-30-12 — CIVIL — STATE OF CALIFORNIA

THE STATE OF CALIFORNIA OR ITS OFFICERS OR AGENTS SHALL NOT BE RESPONSIBLE FOR THE ACCURACY OR COMPLETENESS OF SCANNED COPIES OF THIS PLAN SHEET.

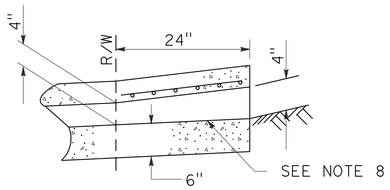

SECTION INLET TYPE 2

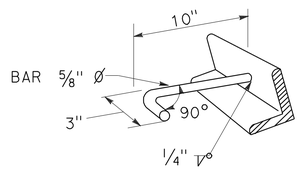

DETAIL OF ANCHOR (J-BAR)

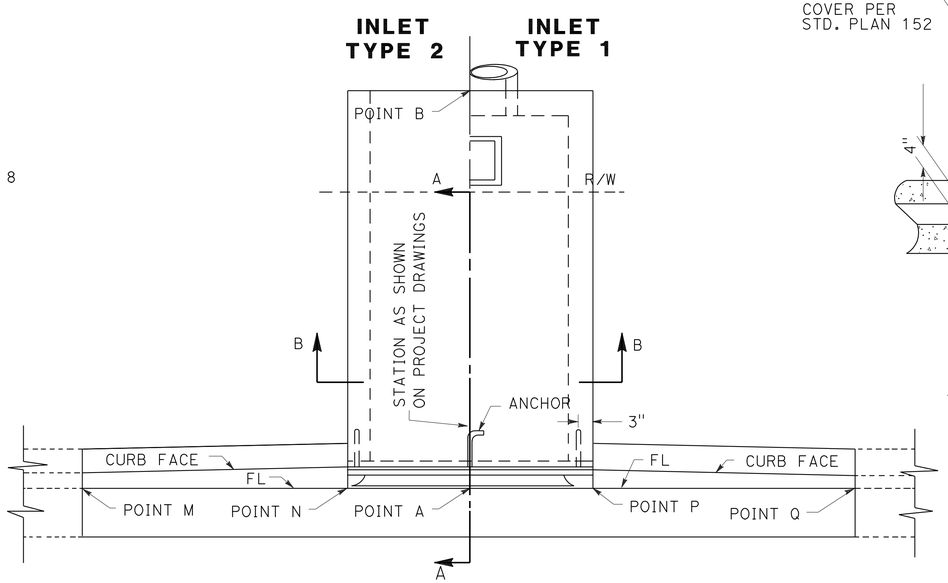

PLAN

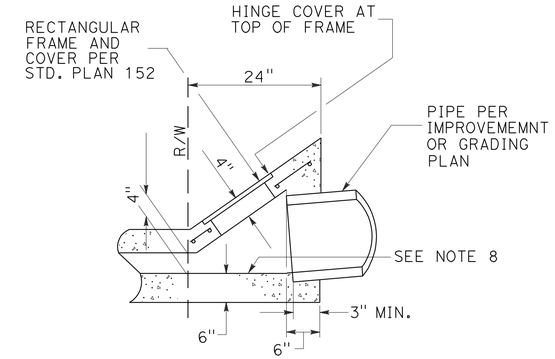

SECTION INLET TYPE 1

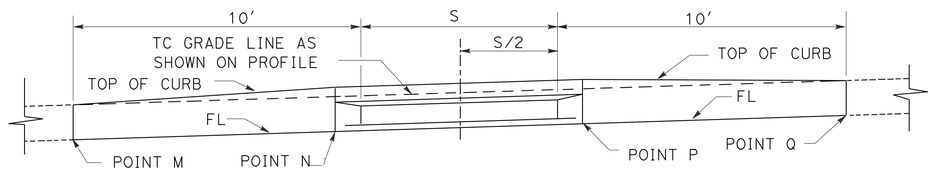

PROFILE

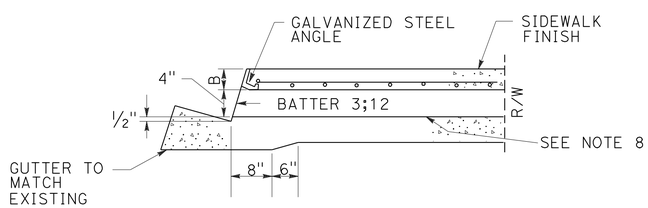

SECTION A-A

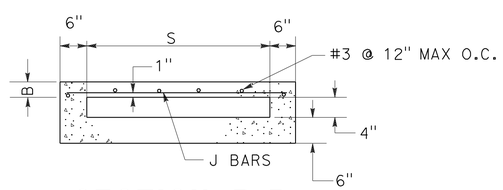

SECTION B-B

S	J BAR SPACING
12"	7"
18"	7"
24"	7"
30"	7"
36"	7"
42"	6"
48"	5"
54"	6-1/2"
60"	5"
66"	4"
72"	3-1/2"

NOTES:

FOR S=30" AND LESS, USE 2 ANCHORS. OTHERWISE, USE 3 ANCHORS.

FOR S=48" AND LESS, B=3"

USE 2-1/2"x2"x3/8" GALVANIZED STEEL ANGLE.

OTHERWISE, B=4". USE 3-1/2"x3"x1/2" GALVANIZED STEEL ANGLE. J BARS ARE #3

NOTES:

1. FLOOR OF BOX SHALL BE TROWLED SMOOTH.
2. IF THE TOE OF SLOPE IS ALLOWED WITHIN THE R/W, INLET TYPE 1 BEGINS AT THE TOE RATHER THAN AT THE R/W LINE.
3. FOR OPEN DITCH (TYPE 2), THE 24" EXTENSION BEYOND THE R/W LINE IS NOT REQUIRED WHEN BACK OF WALK IS 24" OR MORE FROM THE R/W LINE; HOWEVER, THE PIPE SHALL EXTEND TO THE R/W LINE IN ANY EVENT.
4. TOP OF INLET STRUCTURE (TYPE 1 & 2) SHALL BE FLUSH WITH ADJACENT SURFACE WHERE PRACTICAL.
5. A HEADED STEEL STUD 5/8" x 6-3/8" WITH A 1" HEAD ATTACHED BY A FULL PENETRATION BUTT WELD MAY BE USED AS AN ALTERNATE ANCHOR.
6. NORMAL CURB FACE AT THE POINT M AND Q. CURB FACE IS B + 5" AT POINT N AND P.
7. THE 3" LEG OF THE 5/8" DIA. ANCHORS SHALL BE PARALLEL TO THE TOP OF SIDEWALK.
8. SLOPE = 2.0% MIN UNLESS OTHERWISE SHOWN ON PROJECT PLANS
9. THE PARKWAY DRAIN IS PER AMERICAN PUBLIC WORK ASSOCIATION (APWA), STANDARD PLAN 151-1

DS #	ELEV A	ELEV B	ELEV N	ELEV P	S (FT)
36	860.15	859.95	860.16	860.14	3.0
126	876.70	876.73	876.73	876.66	4.0
135	861.14	861.24	861.15	861.12	3.0

PARKWAY DRAIN

THIS PLAN ACCURATE FOR DRAINAGE WORK ONLY.

DRAINAGE DETAILS

NO SCALE

DD-4

STATE OF CALIFORNIA - DEPARTMENT OF TRANSPORTATION — DESIGN

FUNCTIONAL SUPERVISOR: MARK PERTILE

CALCULATED-DESIGNED BY: MOHAMMAD ABDRABOH — REVISED BY: ALAN R. BISI

CHECKED BY — DATE REVISED

LAST REVISION 12-01-10 | DATE PLOTTED => 29-APR-2011 | TIME PLOTTED => 17:58

Dist	COUNTY	ROUTE	POST MILES TOTAL PROJECT	SHEET No.	TOTAL SHEETS
08	Riv	91	15.6/21.6	278	2028

REGISTERED CIVIL ENGINEER 12-1-10 DATE

4-25-11
PLANS APPROVAL DATE

REGISTERED PROFESSIONAL ENGINEER ALAN R. BISI No. C62808 Exp. 6-30-12 CIVIL STATE OF CALIFORNIA

THE STATE OF CALIFORNIA OR ITS OFFICERS OR AGENTS SHALL NOT BE RESPONSIBLE FOR THE ACCURACY OR COMPLETENESS OF SCANNED COPIES OF THIS PLAN SHEET.

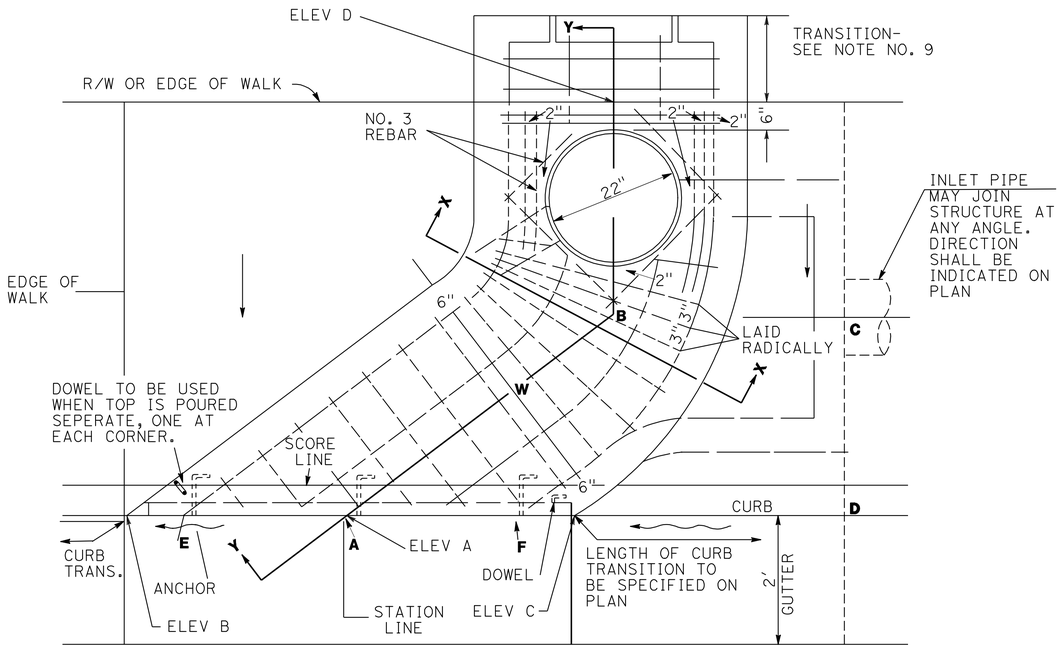

TOP VIEW

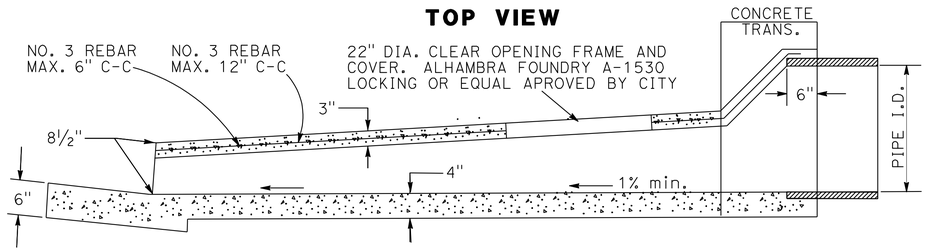

SECTION Y-Y

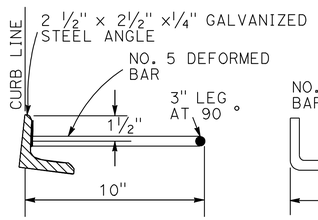

ANCHOR DETAIL

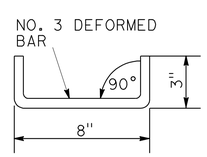

DOWEL DETAIL

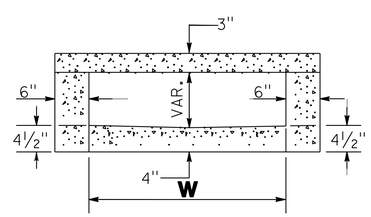

SECTION X-X

NOTES:

1. CONCRETE SHALL BE MINOR CONCRETE MINOR STRUCTURE. WHEN STRUCTURE IS TO BE CONSTRUCTED WITHIN THE LIMITS OF A PROPOSED SIDEWALK OR IS CONTIGUOUS TO SUCH SIDEWALK, THE TOP OF THE STRUCTURE SHALL BE POURED MONOLITHIC WITH THE SIDEWALK, USING THE SAME CLASS OF CONCRETE AS IN THE SIDEWALK.

2. DIMENSIONS SHALL BE AS FOLLOWS UNLESS OTHERWISE SPECIFIED ON THE PLAN:
   A-B=5′
   C_1-D_1=3′
   E-F=5′
   W=3′

3. FLOOR OF STRUCTURE SHALL BE GIVEN A STEEL-TROWELED FINISH AND CONSTRUCTED ON A STRAIGHT GRADE FROM BACK OF STRUCTURE TO GUTTER FLOW-LINE AT POINT A. THE V-SECTION SPECIFIED FOR INVERT SHALL EXTEND FROM PIPE OUTLET TO A POINT 3′ FROM THE GUTTER, FROM WHICH POINT THE INVERT SHALL BE WARPED TO JOIN THE GUTTER FLOW-LINE AT THE STRUCTURE.

4. REINFORCING STEEL BARS SHALL BE 1" FROM THE BOTTOM OF THE SLAB.

5. SIDEWALK AND CURB APPURTENANT TO THE STRUCTURE SHALL BE INCLUDED IN THE BID.

6. SURFACE OF ALL EXPOSED CONCRETE SHALL CONFORM TO EXISTING OR PROPOSED CURB AND WALK ADJACENT TO THE STRUCTURE.

7. CORRUGATED METAL FORMS SHALL NOT BE USED FOR SUPPORTING THE TOP SLAB.

8. TOP OF STRUCTURE SHALL SLOPE 2% TOWARD CURB EXCEPT WHEN OTHERWISE SHOWN ON PLAN OR TO FIT EXISTING SIDEWALK.

9. TRANSITION FROM PIPE TO STRUCTURE, IF REQUIRED, TO BE IN BACK OF SIDEWALK. DIMENSIONS OF TRANSITION SHALL BE SPECIFIED ON THE PLAN.

DS #	ELEV A	ELEV B	ELEV C	ELEV D	W (ft)
133	844.16	844.15	844.17	844.90	6.00
134	857.90	857.89	857.91	858.10	6.00

CITY OF RIVERSIDE CURB OUTLET

THIS PLAN ACCURATE FOR DRAINAGE WORK ONLY.

DRAINAGE DETAILS

NO SCALE

DD-5

STATE OF CALIFORNIA - DEPARTMENT OF TRANSPORTATION
Caltrans® DESIGN
FUNCTIONAL SUPERVISOR MARK PERTILE
CALCULATED-DESIGNED BY MOHAMMAD ABDRABOH
CHECKED BY ALAN R. BISI
REVISED BY
DATE REVISED

LAST REVISION 12-01-10
DATE PLOTTED => 29-APR-2011
TIME PLOTTED => 17:59

Dist	COUNTY	ROUTE	POST MILES TOTAL PROJECT	SHEET No.	TOTAL SHEETS
08	Riv	91	15.6/21.6	279	2028

REGISTERED CIVIL ENGINEER 3-29-10 DATE

4-25-11
PLANS APPROVAL DATE

REGISTERED PROFESSIONAL ENGINEER ALAN R. BISI No. C62808 Exp. 6-30-12 CIVIL STATE OF CALIFORNIA

THE STATE OF CALIFORNIA OR ITS OFFICERS OR AGENTS SHALL NOT BE RESPONSIBLE FOR THE ACCURACY OR COMPLETENESS OF SCANNED COPIES OF THIS PLAN SHEET.

NOTES: FOR GD-1

1. "H" IS THE DIFFERENCE IN ELEVATION BETWEEN THE OUTLET PIPE FLOW LINE AND THE FLOW LINE OF THE GRATES.
2. STEPS - NONE REQUIRED WHEN "H" IS 2'-6" OR LESS. WHERE "H" IS 2'-6" OR MORE, INSTALL STEPS WITH LOWEST RUNG 1'-0" ABOVE THE FLOOR AND HIGHEST RUNG NOT MORE THAN 6" BELOW THE TOP OF THE INLET. THE DISTANCE BETWEEN STEPS SHALL NOT EXCEED 1'-0" AND SHALL BE UNIFORM THROUGHOUT THE LENGTH OF THE WALL. PLACE STEPS IN THE WALL WITHOUT AN OPENING.
3. PIPE CAN BE PLACED IN WALL SHOWN AND/OR IN OPPOSITE WALL.
4. REINFORCING STEEL IN WALLS SHALL BE #5 @ 12" O.C. EACH WAY AND PLACED 1-1/2" CLEAR TO INSIDE OF BOX. FOR INLETS w/ H>18', HORIZONTAL STEEL SHALL BE #5 @ 10" O.C.
5. BAR MAY BE ROTATED AS NECESSARY TO CLEAR OPENING. WHERE "L" IS 6" OR LESS, BAR MAY BE OMITTED.
6. REFERENCE STANDARD PLAN D74B AND D77A FOR DETAILS NOT SHOWN.

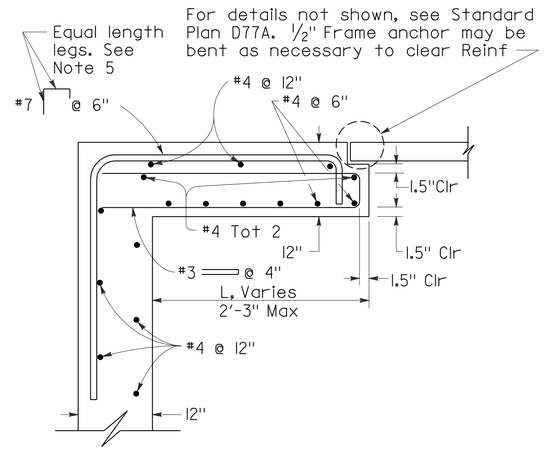

SECTION C-C

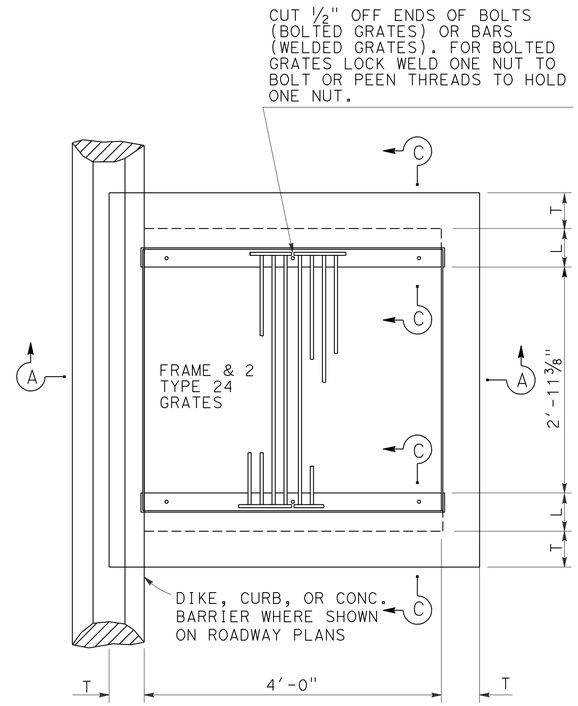

PLAN

GD-1 INLET

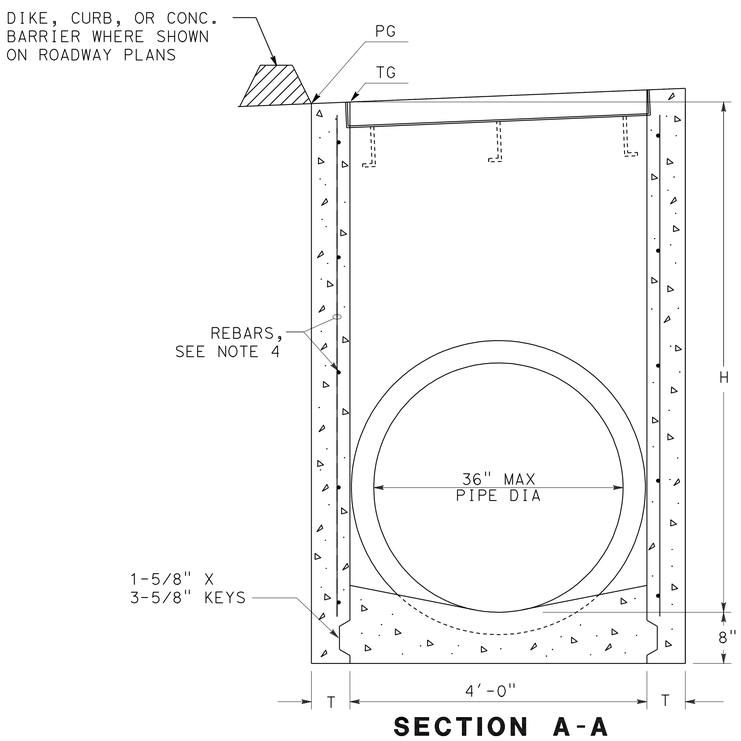

SECTION A-A

(FOR PIPE DIAMETERS 36" OR LESS)

MISCELLANEOUS IRON & STEEL

INLET TYPE	No. OF GRATES	GRATE TYPE	WEIGHT (LB)
GD-1	2	24-12	634
	2	24-12X*	473
	2	24 - 10C*	391
	2	24 - 10S*	456
	2	24 - 13*	374

* - DENOTES BICYCLE-PROOF GRATE

H	T
8" OR LESS	6"
8'-1" TO 18'	8"
18'-1" TO 30'	10"

DRAINAGE SYSTEMS APPLICABLE TO THIS SHEET		
38a	54e	81c
81e	81g	93d
98e	103c	

GD-1 INLET DETAILS

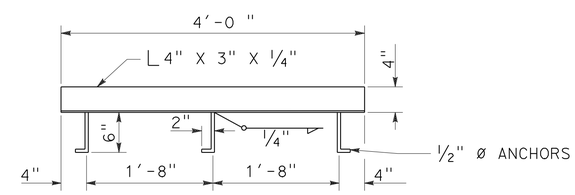

FRAME ANCHOR PLACEMENT

THIS PLAN ACCURATE FOR DRAINAGE WORK ONLY.

DRAINAGE DETAILS

NO SCALE

DD-6

STATE OF CALIFORNIA - DEPARTMENT OF TRANSPORTATION
Caltrans
DESIGN
FUNCTIONAL SUPERVISOR: MARK PERTILE
CALCULATED-DESIGNED BY: MOHAMMAD ABDRABOH
CHECKED BY: ALAN R. BISI
REVISED BY
DATE REVISED

LAST REVISION 03-29-11
DATE PLOTTED => 29-APR-2011
TIME PLOTTED => 17:59

Dist	COUNTY	ROUTE	POST MILES TOTAL PROJECT	SHEET No.	TOTAL SHEETS
08	Riv	91	15.6/21.6	280	2028

REGISTERED CIVIL ENGINEER 3-29-10 DATE

4-25-11
PLANS APPROVAL DATE

REGISTERED PROFESSIONAL ENGINEER ALAN R. BISI No. C62808 Exp. 6-30-12 CIVIL STATE OF CALIFORNIA

THE STATE OF CALIFORNIA OR ITS OFFICERS OR AGENTS SHALL NOT BE RESPONSIBLE FOR THE ACCURACY OR COMPLETENESS OF SCANNED COPIES OF THIS PLAN SHEET.

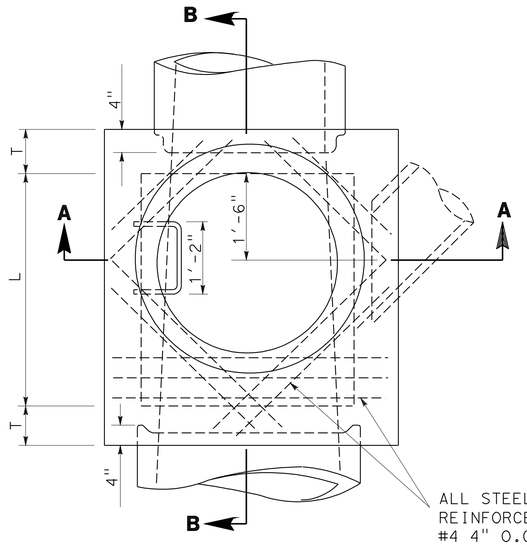

PLAN
(SHAFT NOT SHOWN)

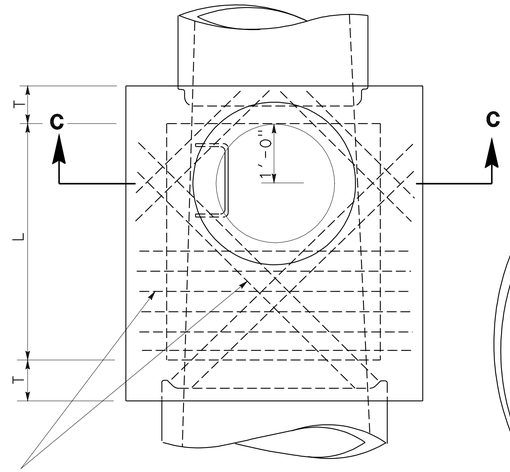

DETAIL N
PLAN
(SHAFT NOT SHOWN)
SEE NOTE M

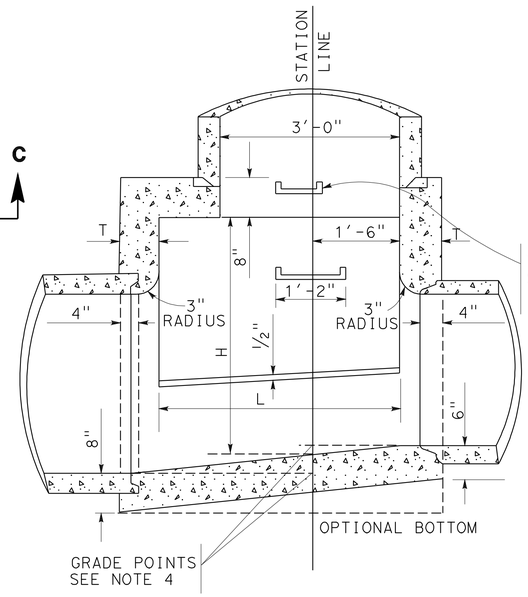

3/4" ROUND GALVANIZED
STEEL STEPS 17 O.C.
(ALHAMBRA FDY. A-3320 OR EQUAL APPROVED BY ENGINEER)

SECTION B-B

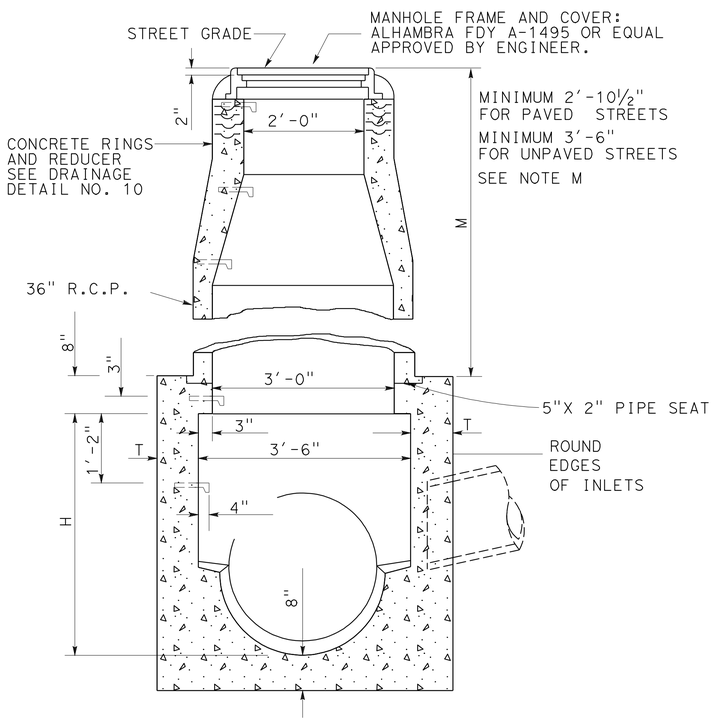

SECTION A-A

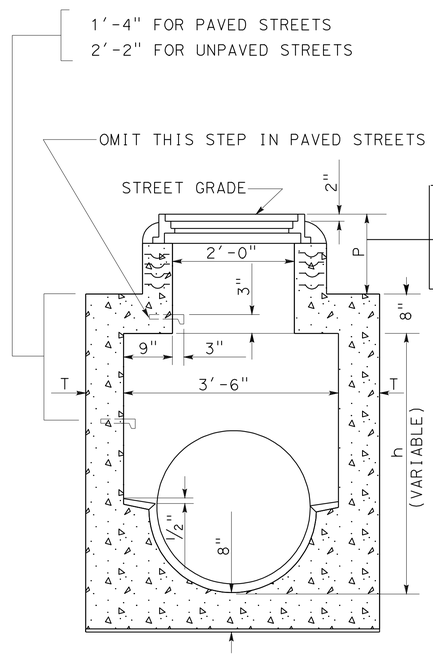

	Max	Min
FOR PAVED STREETS	11"	8 1/2"
FOR UNPAVED STREETS	16"	15"

(SEE NOTE P)

SECTION C-C

DRAINAGE SYSTEMS APPLICABLE TO THIS SHEET		
108e	108g	108i

NOTES:

H-HEIGHT H (IN SEC.A-A AND SEC.B-B) SHALL BE NOT LESS THAN 4'-0" BUT MAY BE INCREASED AT OPTION OF CONTRACTOR, PROVIDED THAT THE VALUE OF M SHALL BE NOT LESS THAN THE MINIMUM SPECIFIED AND THAT THE REDUCER SHALL BE USED. FOR h (IN SEC. C-C) SEE NOTE P

L-LENGTH L SHALL BE 4'-0" UNLESS OTHERWISE SHOWN ON IMPROVEMENT PLAN. L MAY BE INCREASED OR LOCATION OF MANHOLE SHIFTED TO MEET PIPE ENDS, AT THE OPTION OF CONTRACTOR, EXCEPT THAT ANY CHANGE IN LOCATION OF MANHOLE MUST BE APPROVED BY THE ENGINEER.

M-SHAFT SHALL BE CONSTRUCTED AS PER SEC. C-C AND DETAIL N WHEN DEPTH M FROM STREET GRADE TO TOP OF BOX IS LESS THAN 2'-10 1/2" FOR PAVED STREETS OR 3'-6" FOR UNPAVED STREETS.

P-DEPTH P MAY BE REDUCED TO AN ABSOLUTE LIMIT OF 6" WHEN LARGER VALUES OF P WOULD REDUCE h (IN SEC. C-C) TO 3'-6" OR LESS.

T-T SHALL BE 8" FOR VALUES OF H UP TO AND INCLUDING 8 FEET.
T-SHALL BE 10" FOR VALUES OF H OVER 8 FEET

1. CONCRETE SHALL BE MINOR CONCRETE.
2. STEPS SHALL BE 3/4" ROUND , GALVANIZED STEEL AND ANCHORED NOT LESS THAN 6" IN THE WALLS OF STRUCTURE UNLESS OTHERWISE SHOWN, STEPS SHALL BE SPACED 1'-5" ON CENTERS. THE LOWEST STEP SHALL BE NOT MORE THAN 2 FEET ABOVE THE LEDGE AT SIDE OF MANHOLE FLOOR. (ALHAMBRA FDY. A-3320 OR EQUAL APPROVED BY THE RESIDENT ENGINEER).
3. REINFORCING STEEL SHALL BE NO.4 DEFORMED, STRAIGHT BARS 1 1/2" CLEAR FROM FACE OF CONCRETE.
4. STATIONS OF MANHOLE SHOWN ON IMPROVEMENT PLAN APPLY AT CENTER LINE OF SHAFT . ELEVATIONS ARE SHOWN AT SHAFT CENTER AND REFER TO THE PROLONGED INVERT GRADE LINE. SEE NOTE L FOR SHIFTING LOCATION.
5. FLOOR OF MANHOLE SHALL BE STEEL-TROWELED.
6. RINGS, REDUCER, AND PIPE FOR ACCESS SHAFT SHALL BE SEATED IN CEMENT MORTAR AND NEATLY POINTED OR WIPED INSIDE SHAFT.
7. COVER SHALL HAVE LETTER D IN CENTER.
8. THE JUNCTION STRUCTURE IS PER MODIFIED CITY OF RIVERSIDE EZ MANHOLE, STANDARD DRAWING NO. 431.

MANHOLE-CITY OF RIVERSIDE TYPE EZ

DRAINAGE DETAILS
NO SCALE
DD-7

THIS PLAN ACCURATE FOR DRAINAGE WORK ONLY.

STATE OF CALIFORNIA - DEPARTMENT OF TRANSPORTATION
Caltrans® DESIGN

FUNCTIONAL SUPERVISOR: MARK PERTILE
CALCULATED-DESIGNED BY: MOHAMMAD ABDRABOH
CHECKED BY: ALAN R. BISI
REVISED BY
DATE REVISED

LAST REVISION 03-29-11
DATE PLOTTED => 29-APR-2011
TIME PLOTTED => 17:59

Dist	COUNTY	ROUTE	POST MILES TOTAL PROJECT	SHEET No.	TOTAL SHEETS
08	Riv	91	15.6/21.6	281	2028

REGISTERED CIVIL ENGINEER 3-29-10 DATE

4-25-11
PLANS APPROVAL DATE

REGISTERED PROFESSIONAL ENGINEER ALAN R. BISI No. C62808 Exp. 6-30-12 CIVIL STATE OF CALIFORNIA

THE STATE OF CALIFORNIA OR ITS OFFICERS OR AGENTS SHALL NOT BE RESPONSIBLE FOR THE ACCURACY OR COMPLETENESS OF SCANNED COPIES OF THIS PLAN SHEET.

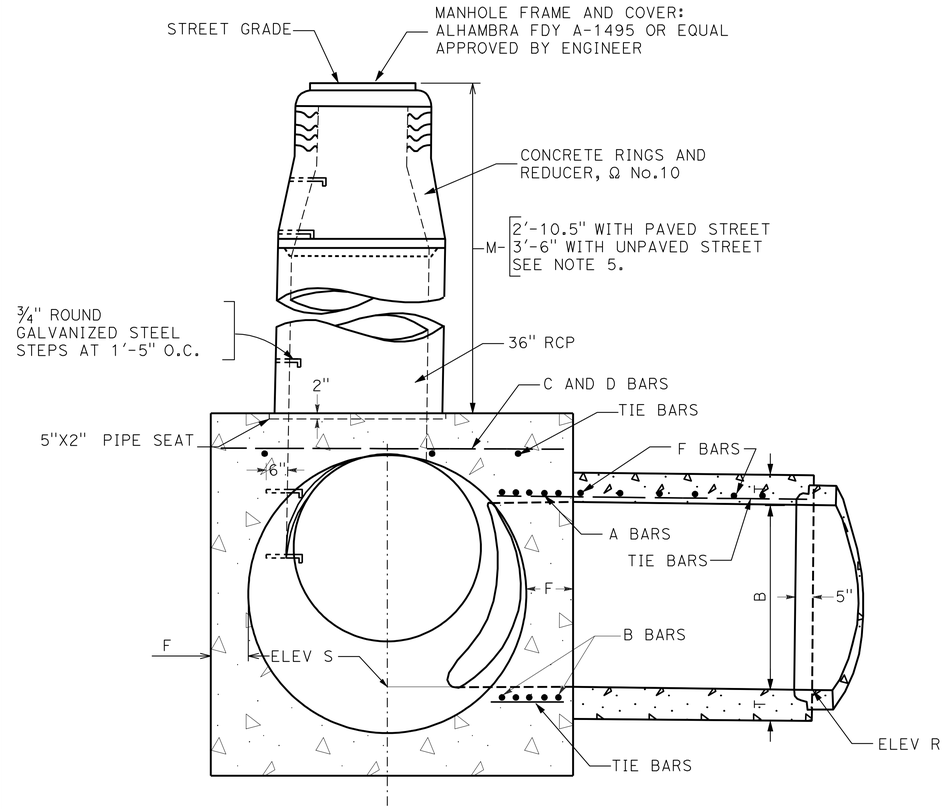

SECTION N-M-P-O
PROJECT ON P-P-O

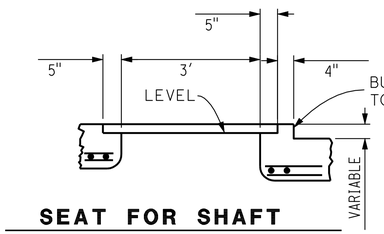

SEAT FOR SHAFT
WHEN TOP IS NOT LEVEL

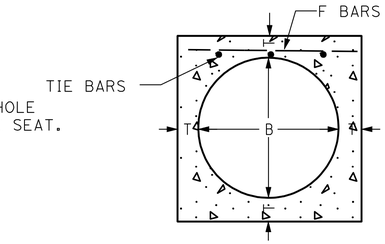

SECTION G-G

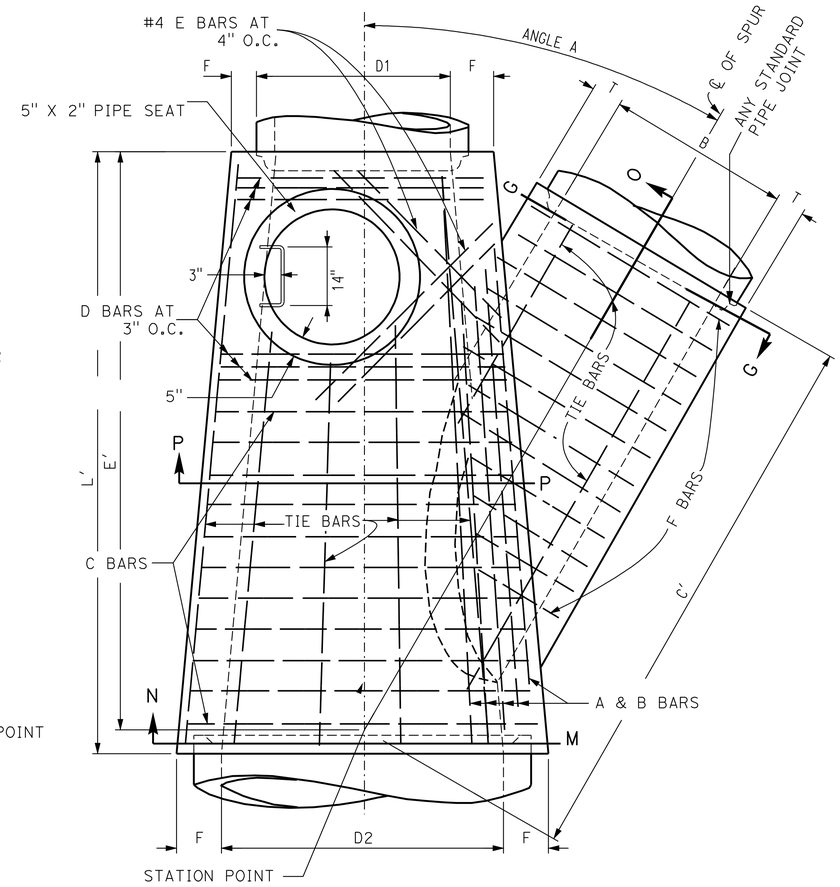

PLAN
(SHAFT NOT SHOWN)

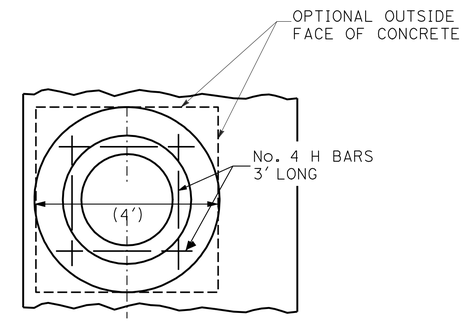

PLAN
(RINGS AND COVER NOT SHOWN)

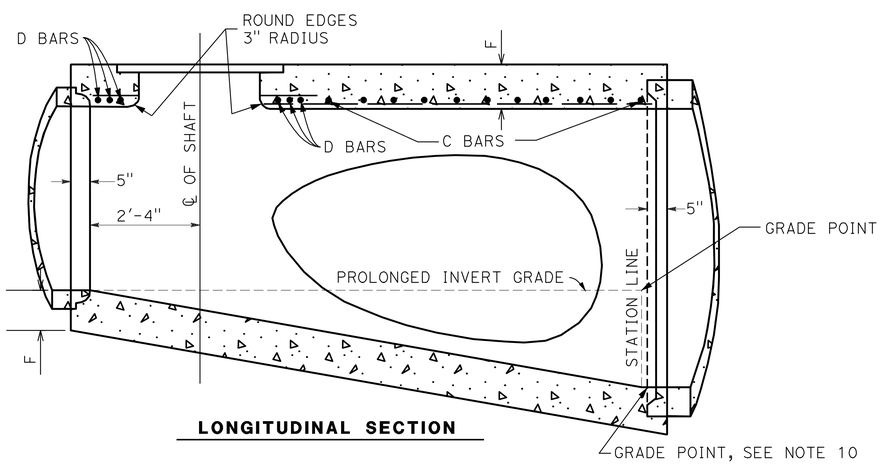

LONGITUDINAL SECTION

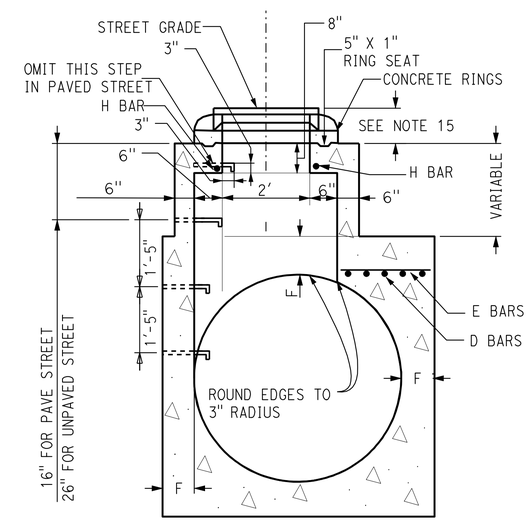

DETAIL "M"
(SEE NOTE 5)

DRAINAGE SYSTEMS APPLICABLE TO THIS SHEET		
115a	115h	

MANHOLE - CITY OF RIVERSIDE TYPE JM

(SHEET 1 OF 2)

THIS PLAN ACCURATE FOR DRAINAGE WORK ONLY.

DRAINAGE DETAILS

NO SCALE

DD-8

STATE OF CALIFORNIA - DEPARTMENT OF TRANSPORTATION
Caltrans DESIGN
FUNCTIONAL SUPERVISOR: MARK PERTILE
CALCULATED-DESIGNED BY: MOHAMMAD ABDRABOH
CHECKED BY: ALAN R. BISI
REVISED BY
DATE REVISED

LAST REVISION 03-29-11
DATE PLOTTED => 29-APR-2011
TIME PLOTTED => 17:35

Dist	COUNTY	ROUTE	POST MILES TOTAL PROJECT	SHEET No.	TOTAL SHEETS
08	Riv	91	15.6/21.6	282	2028

REGISTERED CIVIL ENGINEER 12-1-10 DATE

4-25-11
PLANS APPROVAL DATE

REGISTERED PROFESSIONAL ENGINEER ALAN R. BISI No. C62808 Exp. 6-30-12 CIVIL STATE OF CALIFORNIA

THE STATE OF CALIFORNIA OR ITS OFFICERS OR AGENTS SHALL NOT BE RESPONSIBLE FOR THE ACCURACY OR COMPLETENESS OF SCANNED COPIES OF THIS PLAN SHEET.

TABLE OF BARS SIZES

D_2 OR B	A & B	D OR F
12" 39"	#5 @ 3"	#4 @ 6"
42" 84"	#6 @ 3"	#5 @ 6"
90" 144"	#7 @ 3"	#6 @ 6"

TABLE OF VALUES FOR F AND T

D2	F	B	T
27"	5¼	12"	4"
30"	6"	15"	4¼"
33"	6½"	18"	4½"
36"	6½"	21"	5"
39"	7"	24"	5¼"
42"	7½"	27"	5½"
45"	7¾"	30"	6"
48"	8"	33"	6¼"
51"	8½"	36"	6½"
54"	9"	39"	7"
57"	9¼"	42"	7½"
60"	9½"	45"	7¾"
63"	10"	48"	8"
66"	10¼"	51"	8½"
69"	10¾"	54"	9"
72"	11"	57"	9¼"
78"	11¾"	60"	9½"
84"	12½"	63"	10"
90"	13¼"	66"	10¼"
96"	14"	69"	10¾"
102"	15½"	72"	11"
108"	16"	78"	11¾"
114"	16½"	84"	12½"
120"	17"	90"	13¼"
126"	17"	96"	14"
132"	17½"	102"	15½"
138"	17½"	108"	16"
144"	18"	114"	16½"
		120"	17"
		126"	17"
		132"	17½"
		138"	17½"
		144"	18"

STORM DRAIN MAIN							
D1 OR D2	ANGLE VALUE	30	40	50	60	70	80
18	C	2.8	2.3	2.0	1.8	1.7	1.6
	E	2.4	1.8	1.4	1.1	0.9	0.7
36	C	4.6	3.7	3.2	2.9	2.7	2.6
	E	4.0	2.9	2.2	1.7	1.2	0.9
48	C	5.8	4.6	4.0	3.6	3.3	3.2
	E	5.1	3.7	2.7	2.0	1.5	1.0
48	C	7.1	5.6	4.8	4.3	4.0	3.8
	E	6.2	4.4	3.3	2.4	1.7	1.1

STORM DRAIN LATERAL							
	ANGLE VALUE	30	40	50	60	70	80
12	C	1.9	1.5	1.2	1.0	0.8	0.6
	E	2.2	1.8	1.6	1.5	1.4	1.3
18	C	2.4	1.8	1.4	1.1	0.9	0.7
	E	2.8	2.3	2.0	1.8	1.7	1.6
24	C	3.0	2.2	1.7	1.3	1.0	0.8
	E	3.4	2.7	2.4	2.2	2.0	2.0
30	C	3.5	2.6	2.0	1.5	1.1	0.8
	E	4.0	3.2	2.8	2.5	2.4	2.3
36	C	4.0	2.9	2.2	1.7	1.2	0.9
	E	4.6	3.7	3.2	2.9	2.7	2.6
42	C	4.6	3.3	2.5	1.9	1.4	0.9
	E	5.3	4.2	3.6	3.2	3.0	2.9
48	C	5.1	3.7	2.7	2.0	1.5	1.0
	E	5.8	4.6	4.0	3.6	3.3	3.2

EXAMPLE:
GIVEN:
D_2= 60"
B = 36"
A = 50°
FIND: C′, E′, & L′
SOLUTION:
1. ENTER STORM DRAIN LATERAL TABLE WITH GIVEN D & A.
C_M= 4.8 FT. E_M= 3.3 FT.
2. ENTER STORM DRAIN LATERAL TABLE WITH GIVEN B & A.
C_L= 2.2 FT. E_L= 3.2 FT.
3. C′ = C_M+ C_L= 4.8 FT. + 2.2 FT. = 7.0 FT.
4. E′ = E_M+ E_L= 3.3 FT. + 3.2 FT. = 6.5 FT.
5. L′ = E′ + 1 FT. = 6.5 FT. + 1 FT. = 7.5 FT.

NOTES

1. VALUES FOR A, B, C′, D1, D2, E′, L′, ELEVATION R, AND ELEVATION S ARE SHOWN ON THE PROJECT DRAWINGS (SEE TABLE)
2. IF LATERALS ENTER ON BOTH SIDES OF MANHOLE, ACCESS SHAFT SHALL BE LOCATED ON THE SIDE RECEIVING THE SMALLER LATERAL. LATERALS SHALL BE DESIGNATED ON THE PROJECT DRAWING AS RIGHT OR LEFT, FACING IN THE DIRECTION OF STATIONING.
3. CENTER OF MANHOLE SHAFT SHALL BE LOCATED OVER CENTER LINE OF STORM DRAIN WHEN DIAMETER D1 IS 48" OR LESS, IN WHICH CASE PLACE 4 E BARS SYMMETRICALLY AROUND SHAFT AT 45° WITH CENTER LINE.
4. LENGTH OF MANHOLE MAY BE INCREASED AT OPTION OF CONTRACTOR TO MEET PIPE ENDS, BUT ANY CHANGE IN LOCATION OF SPUR MUST BE APPROVED BY THE ENGINEER.
5. WHEN DEPTH OF MANHOLE FROM STREET GRADE TO TOP OF BOX IS LESS THAN 2′-10½" FOR PAVED STREETS OR 3′-6" FOR UNPAVED STREETS, CONSTRUCT MONOLITHIC SHAFT AS PER DETAIL M. THE CONTRACTOR SHALL HAVE THE OPTION OF CONSTRUCTING SHAFT AS PER DETAIL M FOR ANY DEPTH OF MANHOLE. WHEN DIAMETER D1 IS 48" OR LESS, CENTER OF SHAFT SHALL BE LOCATED AS PER NOTE 3.
6. REINFORCEMENT STEEL SHALL BE ROUND, DEFORMED, STRAIGHT BARS, 1½" CLEAR FROM FACE OF CONCRETE UNLESS SHOWN OTHERWISE. TIE BARS SHALL BE NO. #3 AND SPACING 18" ON CENTERS OR CLOSER. REINFORCEMENT STEEL SHALL CONFORM TO THE REQUIREMENT OF CALTRANS STANDARD SPECIFICATIONS, SECTION 52.
7. CONCRETE SHALL BE STRUCTURAL CONCRETE, BOX CULVERT.
8. STEPS SHALL BE ¾" ROUND GALVANIZED STEEL AND ANCHOR NOT LESS THAN 6" IN THE WALLS OF STRUCTURE. UNLESS OTHERWISE SHOWN THE SPACING SHALL BE 1′-5" ON CENTERS. THE LOWEST STEP SHALL BE NOT MORE THAN 2′ ABOVE THE INVERT.
9. RINGS, REDUCER, AND PIPE FOR ACCESS SHAFT SHALL BE SEATED IN CEMENT MOTAR AND NEATLY POINTED OR WIPED INSIDE SHAFT.
10. STATIONS OF MANHOLES SHOWN ON PROJECT PLAN APPLY AT INTERSECTION OF CENTER LINES OF MAIN LINE AND SPUR. ELEVATIONS SHOWN AT STATIONS REFER TO PROLONGED INVERT GRADE LINES.
11. FLOOR OF MANHOLE SHALL BE STEEL TROWELED TO SPRING LINE.
12. BODY OF MANHOLE, INCLUDING SPUR, SHALL BE POURED IN ONE CONTINUOUS OPERATION, EXCEPT THAT THE CONTRACTOR SHALL HAVE THE OPTION OF PLACING AT THE SPRING LINE A CONSTRUCTION JOINT WITH LONGITUDINAL KEYWAY.
13. ELEVATION "S" APPLIES AT CENTER OF MAIN LINE ON PROLONGATION OF INVERT OF SPUR.
14. COVER SHALL HAVE LETTER D IN CENTER.
15. DETAIL M:
DEPTH OF MANHOLE SHALL BE 11" MAXIMUM AND 8½" MINIMUM FROM STREET GRADE TO TOP OF RING SEAT FOR PAVED STREETS, AND 16" MAXIMUM AND 15" MINIMUM FOR UNPAVED STREETS.
16. THE MANHOLE PIPE TO PIPE IS PER CITY OF RIVERSIDE JM MANHOLE, STANDARD DRAWING NO. 432.

MANHOLE - CITY OF RIVERSIDE TYPE JM
(SHEET 2 OF 2)

DRAINAGE DETAILS
NO SCALE
DD-9

THIS PLAN ACCURATE FOR DRAINAGE WORK ONLY.

STATE OF CALIFORNIA - DEPARTMENT OF TRANSPORTATION
Caltrans® DESIGN
FUNCTIONAL SUPERVISOR MARK PERTILE
CALCULATED-DESIGNED BY MOHAMMAD ABDRABOH
CHECKED BY ALAN R. BISI
REVISED BY
DATE REVISED

LAST REVISION 12-01-10
DATE PLOTTED => 11-JUL-2011
TIME PLOTTED => 13:48

Dist	COUNTY	ROUTE	POST MILES TOTAL PROJECT	SHEET No.	TOTAL SHEETS
08	Riv	91	15.6/21.6	283	2028

REGISTERED CIVIL ENGINEER 3-29-10 DATE

4-25-11
PLANS APPROVAL DATE

REGISTERED PROFESSIONAL ENGINEER ALAN R. BISI No. C62808 Exp. 6-30-12 CIVIL STATE OF CALIFORNIA

THE STATE OF CALIFORNIA OR ITS OFFICERS OR AGENTS SHALL NOT BE RESPONSIBLE FOR THE ACCURACY OR COMPLETENESS OF SCANNED COPIES OF THIS PLAN SHEET.

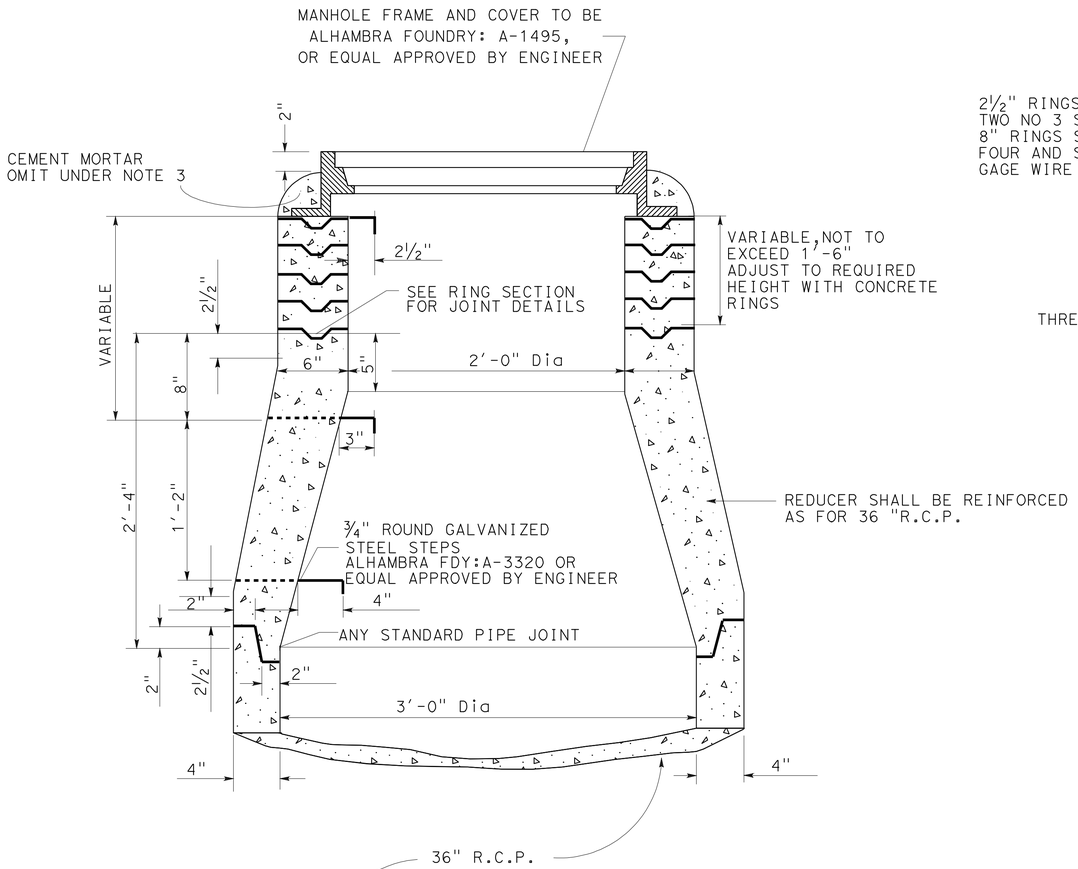

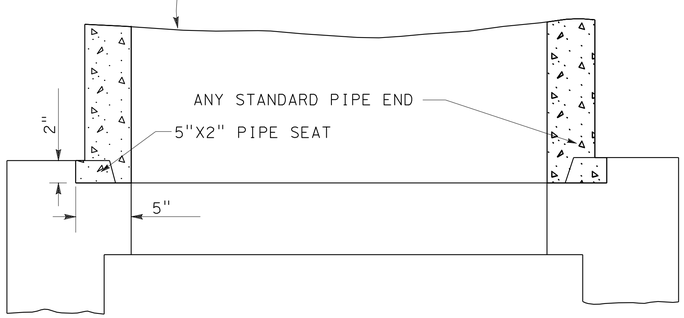

VERTICAL SECTION OF MANHOLE SHAFT

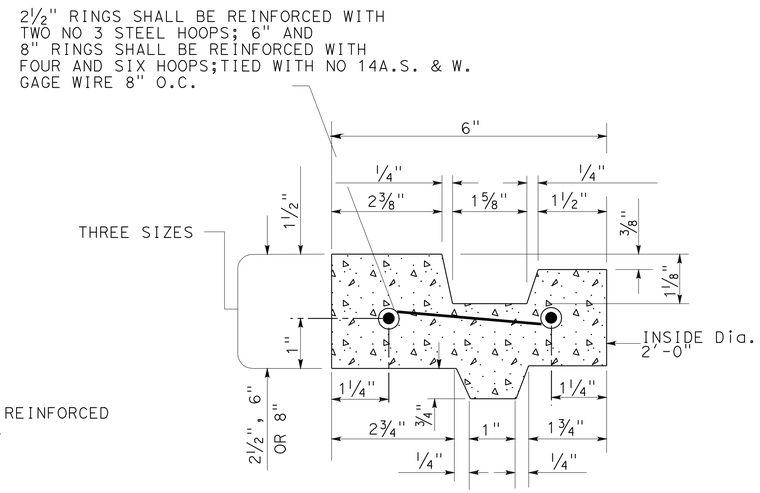

CROSS SECTION OF CONCRETE RING

DRAINAGE SYSTEMS APPLICABLE TO THIS SHEET		
109e	109g	109i
57e	115a	115m

NOTES

1. CONCRETE FOR POURED UNITS SHALL BE MINOR CONCRETE
2. JOINTS SHALL BE FILLED WITH CEMENT MORTAR AND NEATLY POINTED OR WIPED ON INSIDE OF SHAFT
3. COLLAR OF CEMENT MORTAR AROUND COVER FRAME SHALL BE OMITTED IN ROCK AND OIL STREETS AND IN PAVED STREETS
4. CONCRETE RINGS SHALL BE OF THE DIMENSIONS SHOWN AND REINFORCED AS SHOWN HEREON
5. STEPS SHALL BE ¾" ROUND GALVANIZED STEEL. TOP STEP SHALL BE PLACED DIRECTLY BENEATH THE MANHOLE COVER FROM WITH LEGS EXTENDING INTO WALL OF SHAFT ON RADIAL LINES. WIDTH OF ALL STEPS SHALL BE 1'-2" BETWEEN LEG CENTERS EXCEPT WHERE SHOWN OTHERWISE. SPACING OF STEPS SHALL BE 1'-5" BETWEEN CENTERS
6. LENGTH OF SECTIONS OF 36" RCP FOR MANHOLE SHAFT MAY BE 1'-0", 2'-0", 3'-0", OR 4'-0" AT THE OPTION OF THE CONTRACTOR
7. COVER SHALL HAVE LETTER D IN CENTER
8. THE CONCRETE RINGS,REDUCER, & PIPE FOR MANHOLE SHAFT IS PER CITY OF RIVERSIDE STANDARD DRAWING No. 451

CITY OF RIVERSIDE CONCRETE RINGS, REDUCER AND PIPE FOR MANHOLE SHAFT

THIS PLAN ACCURATE FOR DRAINAGE WORK ONLY.

DRAINAGE DETAILS

NO SCALE

DD-10

STATE OF CALIFORNIA - DEPARTMENT OF TRANSPORTATION
Caltrans® DESIGN

FUNCTIONAL SUPERVISOR: MARK PERTILE
CALCULATED-DESIGNED BY: MOHAMMAD ABDRABOH
CHECKED BY: ALAN R. BISI
REVISED BY
DATE REVISED

LAST REVISION 03-29-11 | DATE PLOTTED => 29-APR-2011 | TIME PLOTTED => 17:36

Dist	COUNTY	ROUTE	POST MILES TOTAL PROJECT	SHEET No.	TOTAL SHEETS
08	Riv	91	15.6/21.6	284	2028

REGISTERED CIVIL ENGINEER 3-29-10 DATE

4-25-11
PLANS APPROVAL DATE

REGISTERED PROFESSIONAL ENGINEER ALAN R. BISI No. C62808 Exp. 6-30-12 CIVIL STATE OF CALIFORNIA

THE STATE OF CALIFORNIA OR ITS OFFICERS OR AGENTS SHALL NOT BE RESPONSIBLE FOR THE ACCURACY OR COMPLETENESS OF SCANNED COPIES OF THIS PLAN SHEET.

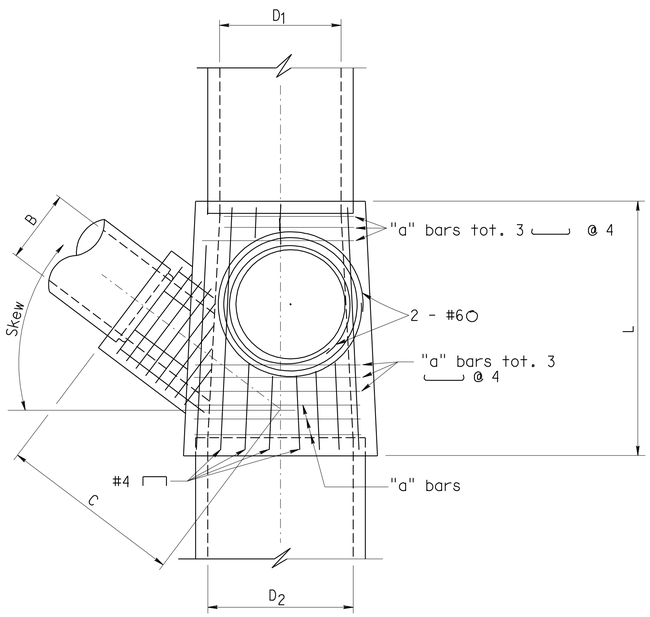

PLAN

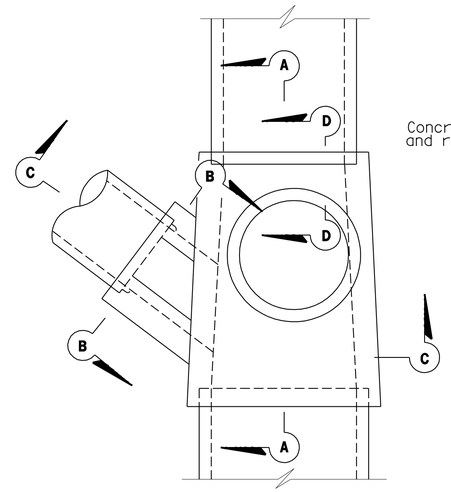

PLAN

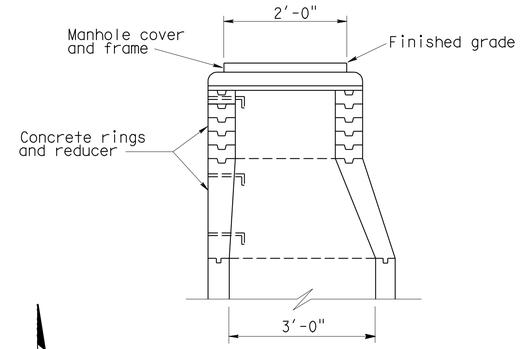

TYPE MH
UPPER STRUCTURE

DRAINAGE SYSTEMS APPLICABLE TO THIS SHEET		
54a	55e	98a
115f	116a	117a
137a		

Span	"a" bars	Top and Bottom slab thickness (ts,bs)*
3.5'	#4 @ 4"	8"
4.0'	#4 @ 4"	8"
4.5'	#5 @ 5"	8"
5.0'	#5 @ 4.5"	8"
5.5'	#6 @ 5.5"	8"
6.0'	#6 @ 5.5"	9"
6.5'	#6 @ 4.5"	9"
7.0'	#6 @ 4"	9.5"

* When fill over junction structure is 2'-0" or less, ts shall be increased by 2".

DESIGN NOTES

1. Designed in conformance with Bridge Design Specifications (1983 AASHTO Specifications with revisions by Caltrans).
2. Live load: HS20-44 truck. Earth pressures: 140 PCF vertical, 100 PCF horizontal.
3. Unit stresses: f'c = 3600 PSI; fy = 60,000 PSI.
4. Maximum fill height = 20'.

GENERAL NOTES

1. Plans shall designate: inlet and outlet pipe diameters, upper structure or manhole (if required), lateral pipe diameter and skew (if required), C,H, and Hb. Manhole or lateral may be omitted.
2. Upper structure, when required, may be any designated inlet type as shown on Standard Plan D72, D73, D74, D75 or this sheet.
3. Risers shall be positioned to either side of the structure as shown.
4. Each riser shall have a ladder. For details see Standard Plan D93.
5. Thickness of deck shall vary as necessary to provide a level manhole seat.
6. Reinforcing steel shall be placed 2" clear, except as shown.
7. Maximum skew of lateral pipe B is 45°.
8. Lateral may be placed in either side wall.
9. Where D1 and/or D2 are less than 3.5', clear distance between side walls shall be 3.5'. End walls shall be 6" thick with #4 @ 12" placed both ways.
10. Side walls shall be flush with the inside of the inlet and outlet pipes when pipe diameters are 3.5' or more.
11. L is 5'-0" minimum.
12. When C is not specified, bring the lateral directly into the wall of the structure.
13. When C is specified, contractor may, at his option, bring the lateral directly into the wall for use as an inside form. A collar conforming with the wall thickness and reinforcement as shown in section B-B shall be poured around the pipe.
14. When lateral is extended directly into the wall, it shall be mitered as necessary to be flush with wall.
15. "b" bars shall extend a minimum of 8" on either side of the opening.
16. Adjacent to each side of the opening, place additional reinforcement equivalent to half the interrupted main reinforcement.

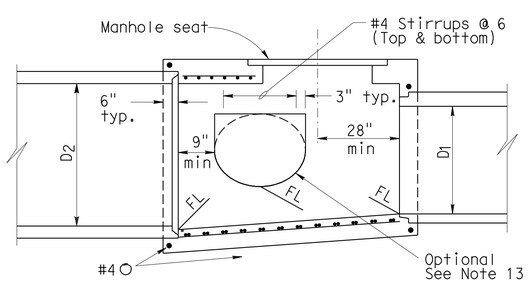

SECTION A-A

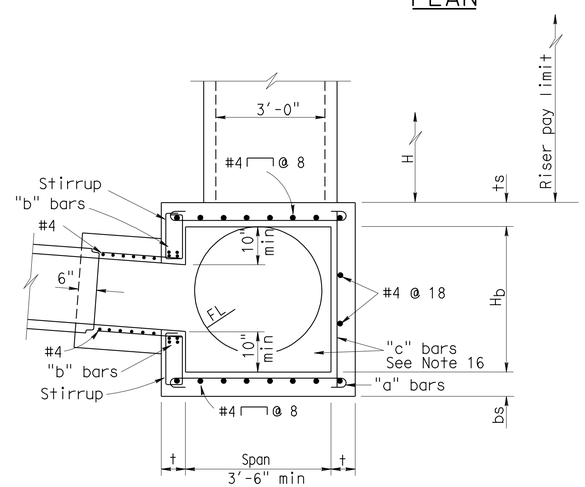

SECTION C-C

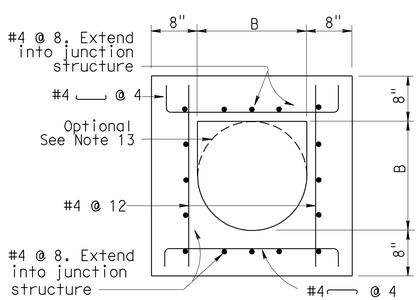

SECTION B-B

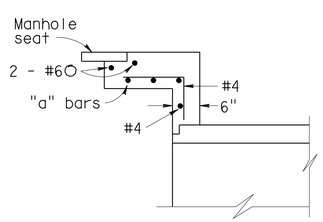

SECTION D-D

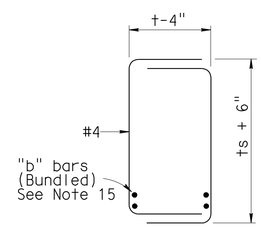

STIRRUPS

H_b	"c" bars	Sidewall thickness (t)
5.5'	#4 @ 4"	8"
6.5'	#5 @ 4"	8.5"
7.0'	#5 @ 4"	9"
8.0'	#6 @ 4"	9.5"

B	"b" bars Top & bottom
2.5'	#5 tot. 4
3.0'	#5 tot. 4
3.5'	#5 tot. 4
4.0'	#5 tot. 4
4.5'	#5 tot. 4
5.0'	#6 tot. 4

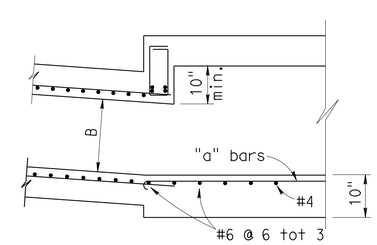

SECTION C-C (OPTIONAL)

Maximum fill height = 8.0'
For reinforcement and details not shown, see Section C-C

JUNCTION STRUCTURE

THIS PLAN ACCURATE FOR DRAINAGE WORK ONLY.

DRAINAGE DETAILS

NO SCALE

DD-11

REVISED BY | DATE REVISED
MOHAMMAD ABDRABOH | ALAN R. BISI
CALCULATED-DESIGNED BY | CHECKED BY
FUNCTIONAL SUPERVISOR | MARK PERTILE
STATE OF CALIFORNIA - DEPARTMENT OF TRANSPORTATION
Caltrans
DESIGN

LAST REVISION 03-29-11 | DATE PLOTTED => 02-MAY-2011 | TIME PLOTTED => 09:14

Dist	COUNTY	ROUTE	POST MILES TOTAL PROJECT	SHEET No.	TOTAL SHEETS
08	Riv	91	15.6/21.6	285	2028

REGISTERED CIVIL ENGINEER 3-29-10 DATE

4-25-11
PLANS APPROVAL DATE

REGISTERED PROFESSIONAL ENGINEER
ALAN R. BISI
No. C62808
Exp. 6-30-12
CIVIL
STATE OF CALIFORNIA

THE STATE OF CALIFORNIA OR ITS OFFICERS OR AGENTS SHALL NOT BE RESPONSIBLE FOR THE ACCURACY OR COMPLETENESS OF SCANNED COPIES OF THIS PLAN SHEET.

INTENTIONALLY LEFT BLANK

DRAINAGE DETAILS
NO SCALE

DD-12

STATE OF CALIFORNIA - DEPARTMENT OF TRANSPORTATION
Caltrans® DESIGN

FUNCTIONAL SUPERVISOR: MARK PERTILE

CALCULATED-DESIGNED BY: MOHAMMAD ABDRABOH
CHECKED BY: ALAN R. BISI

REVISED BY
DATE REVISED

LAST REVISION 03-29-10
DATE PLOTTED => 31-AUG-2011
TIME PLOTTED => 09:23

Dist	COUNTY	ROUTE	POST MILES TOTAL PROJECT	SHEET No.	TOTAL SHEETS
08	Riv	91	15.6/21.6	286	2028

3-29-10
REGISTERED CIVIL ENGINEER DATE

4-25-11
PLANS APPROVAL DATE

REGISTERED PROFESSIONAL ENGINEER
ALAN R. BISI
No. C62808
Exp. 6-30-12
CIVIL
STATE OF CALIFORNIA

THE STATE OF CALIFORNIA OR ITS OFFICERS OR AGENTS SHALL NOT BE RESPONSIBLE FOR THE ACCURACY OR COMPLETENESS OF SCANNED COPIES OF THIS PLAN SHEET.

INTENTIONALLY LEFT BLANK

DRAINAGE DETAILS
NO SCALE
DD-13

THIS PLAN ACCURATE FOR DRAINAGE WORK ONLY.

STATE OF CALIFORNIA - DEPARTMENT OF TRANSPORTATION
Caltrans
DESIGN

FUNCTIONAL SUPERVISOR: MARK PERTILE
CALCULATED-DESIGNED BY: MOHAMMAD ABDRABOH
CHECKED BY: ALAN R. BISI
REVISED BY
DATE REVISED

LAST REVISION 03-29-10
DATE PLOTTED => 31-AUG-2011
TIME PLOTTED => 09:23

Dist	COUNTY	ROUTE	POST MILES TOTAL PROJECT	SHEET No.	TOTAL SHEETS
08	Riv	91	15.6/21.6	287	2028

REGISTERED CIVIL ENGINEER 3-29-10 DATE

4-25-11
PLANS APPROVAL DATE

REGISTERED PROFESSIONAL ENGINEER ALAN R. BISI No. C62808 Exp. 6-30-12 CIVIL STATE OF CALIFORNIA

THE STATE OF CALIFORNIA OR ITS OFFICERS OR AGENTS SHALL NOT BE RESPONSIBLE FOR THE ACCURACY OR COMPLETENESS OF SCANNED COPIES OF THIS PLAN SHEET.

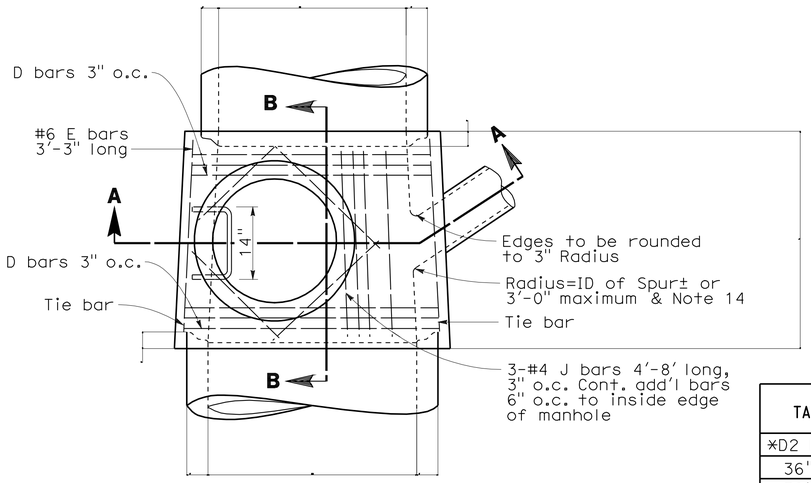

PLAN
(Shaft not shown)

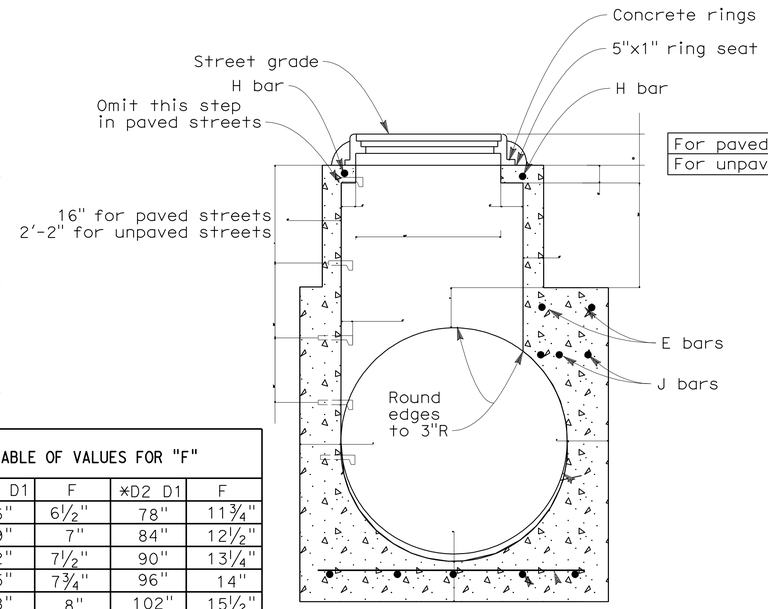

	Max	Min
For paved streets	11"	8½"
For unpaved streets	16"	15"

DETAIL M
(See note 3)

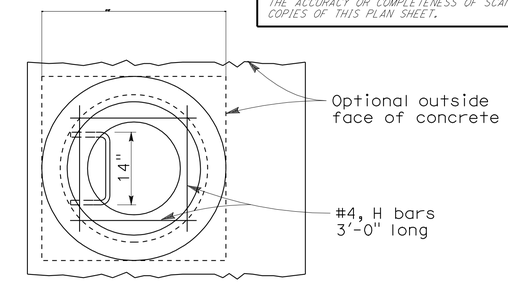

PLAN
(Rings & cover not shown)

TABLE OF VALUES FOR "F"			
*D2 D1	F	*D2 D1	F
36"	6½"	78"	11¾"
39"	7"	84"	12½"
42"	7½"	90"	13¼"
45"	7¾"	96"	14"
48"	8"	102"	15½"
51"	8½"	108"	16"
54"	9"	114"	16½"
57"	9¼"	120"	17"
60"	9½"	126"	17"
63"	10"	132"	17½"
66"	10½"	138"	17½"
69"	10¾"	144"	18"
72"	11"		

* USE D2 OR D1, WHICH IS GREATER

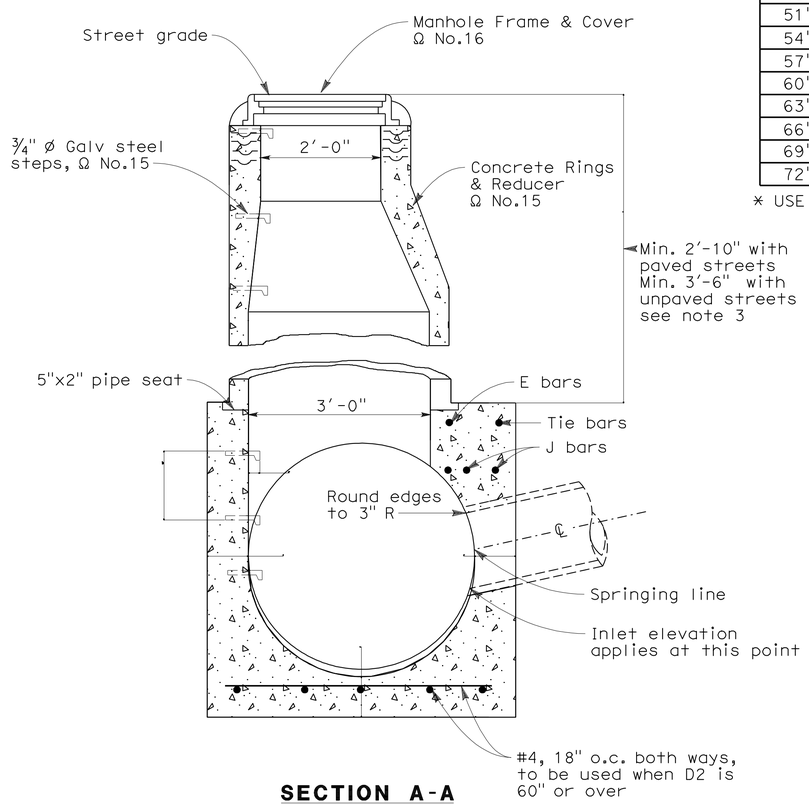

SECTION A-A

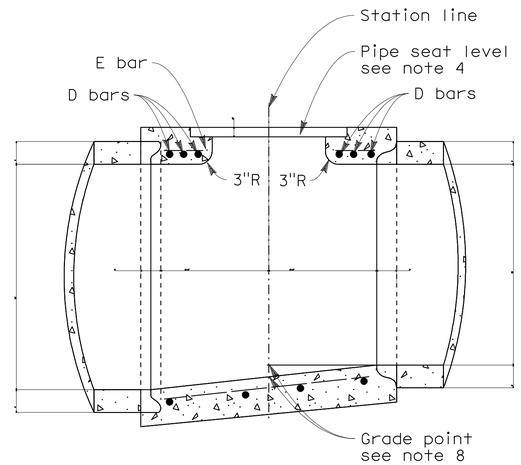

SECTION B-B

NOTES:

1. Table of values for "F" are on this plan.
2. CENTER OF MANHOLE SHAFT shall be located over center line of storm drain when diameter D1 is 48" or less in which case place E bars symmetrically around shaft at 45 with centerline and omit J bars.
3. DETAIL M When depth of manhole from street grade to top of box is less than 2'-10½" for paved street or 3'-6" for unpaved street, contruct monolithic shaft as per Detail M. Shaft for any depth of manhole may be constructed as per Detail M. When diameter D1 is 48" or less, center of shaft may be located per note 2.
4. THICKNESS OF DECK shall vary when necessary to provide level pipe seat, but shall not be less than tabular values for F shown on table.
5. REINFORCING STEEL to be round, deformed bars, 1½" clear from inside face of concrete unless shown otherwise.
6. STEPS shall be¾" round, galvanized steel and anchored not less than 4" (inches) in the walls of structure unless otherwise shown. The spacing shall be 16". The lowest step shall not be more than 2'-0" above the invert. See Ω No.15
7. RINGS, REDUCER AND PIPE for access shaft shall be seated in mortor and neatly painted or wiped inside the shaft.
8. STATIONS of manhole is shown on plan apply at center of shaft. Elevations shown at stations refer to prolonged invert grade lines.
9. FLOOR of manhole shall be steel-troweled to springing line.
10. BODY of manhole shall be poured in one continuous operation, except that a construction joint with a longitudinal key way may be placed at the springing line.
11. LENGTH L AND EMBEDMENT P shall have the following values unless otherwise shown on plan:
    for D2 = 96" or less, L =5'-6", P=5"
    D2 over 96", L=6'-0", P=8"
    L may be increased or location of manhole shifted to meet pipe ends when L greater than that shown above is specified, D bars shall be continued 6" o.c.
12. D BARS shall be #4 for D2=39" or less. #5 for D2 is 42" to 84" inclusive and #6 for D2 is 90" or over. Tie bars shall be #3 bars.
13. Concrete shall be Structural Concrete, Box Culvert.
14. Centerline of inlet pipe to intersect inside face of cone at springing line unless otherwise shown.

RIVERSIDE COUNTY FLOOD CONTROL MANHOLE
MANHOLE No. 2

THIS PLAN ACCURATE FOR DRAINAGE WORK ONLY.

DRAINAGE DETAILS
NO SCALE
DD-14

STATE OF CALIFORNIA - DEPARTMENT OF TRANSPORTATION
Caltrans® DESIGN
FUNCTIONAL SUPERVISOR MARK PERTILE
CALCULATED-DESIGNED BY MOHAMMAD ABDRABOH
CHECKED BY ALAN R. BISI
REVISED BY
DATE REVISED

LAST REVISION 03-29-11
DATE PLOTTED => 11-JUL-2011
TIME PLOTTED => 13:48

Dist	COUNTY	ROUTE	POST MILES TOTAL PROJECT	SHEET No.	TOTAL SHEETS
08	Riv	91	15.6/21.6	288	2028

REGISTERED CIVIL ENGINEER 3-29-10 DATE

4-25-11
PLANS APPROVAL DATE

REGISTERED PROFESSIONAL ENGINEER ALAN R. BISI No. C62808 Exp. 6-30-12 CIVIL STATE OF CALIFORNIA

THE STATE OF CALIFORNIA OR ITS OFFICERS OR AGENTS SHALL NOT BE RESPONSIBLE FOR THE ACCURACY OR COMPLETENESS OF SCANNED COPIES OF THIS PLAN SHEET.

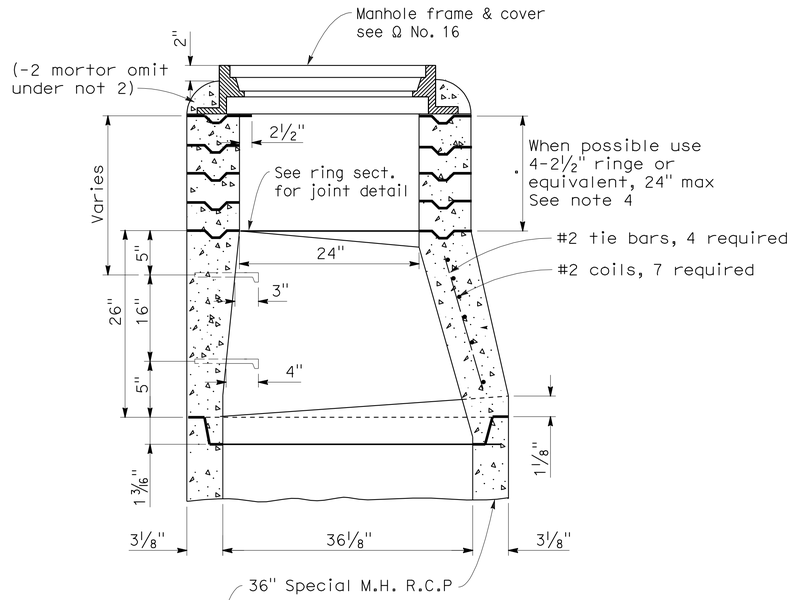

VERTICAL SECTION OF PLAIN CONCRTE ECCENTRIC MANHOLE SHAFT

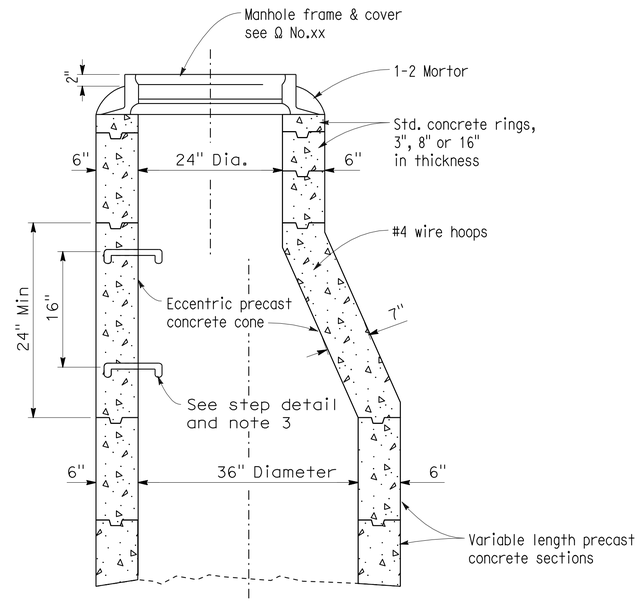

VERTICAL SECTION OF PLAIN CONCRTE ECCENTRIC MANHOLE SHAFT

▲ = When steel forms are used eliminate hook & use upset end.

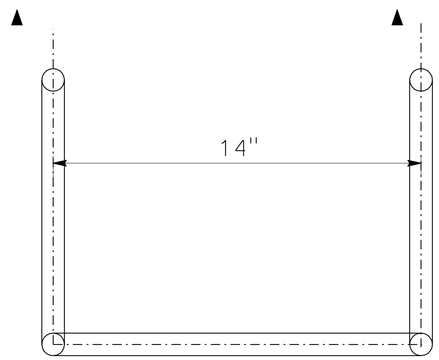

PLAN VIEW

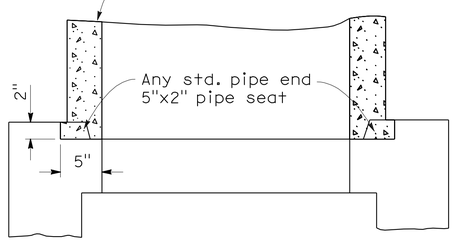

VERTICAL SECTION OF REINFORCED ECCENTRIC MANHOLE SHAFT

2½" RINGS SHALL BE REINFORCED WITH TWO #3 STEEL HOOPS; 6" AND 8" RINGS SHALL BE REINFORCED WITH FOUR AND SIX HOOPS;TIED WITH No.14A.S. & W. GAGE WIRE 8" O.C.

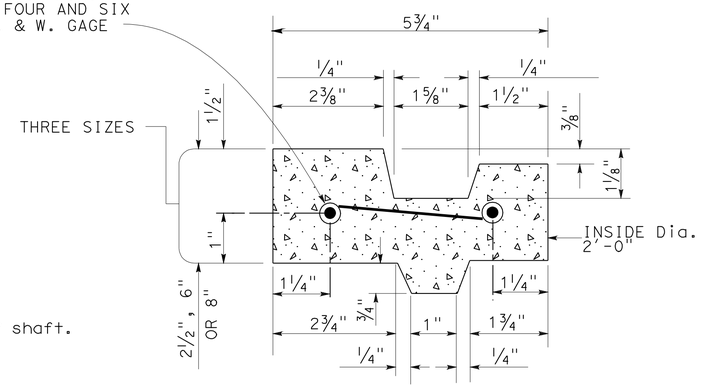

CROSS SECTION OF CONCRETE RING

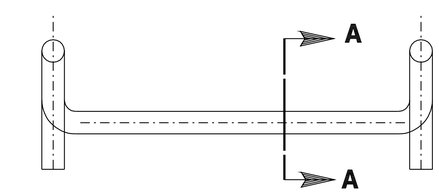

FRONT ELEVATION

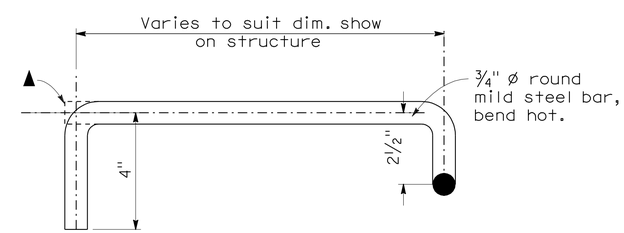

SECTION A-A

MANHOLD SHAFT NOTES:

1. ALL JOINTS shall be filled with 1-2 mortor and neatly painted or wiped off inside of shaft.
2. COLLAR of 1-2 mortar around cover frame shall be omitted in rock and oil streets and in paved streets.
3. STEPS shall be ¾" round galvanized steel. Top step shall be placed directly beneath the manhole cover frame.
   Width of all steps shall be 14" between leg centers. Except where shown otherwise, spacing of steps in shaft shall be 16 inches on center.
4. ECCENTRIC MANHOLE shaft, reducer, and rings may be plain concrete. for unreinforced sections, the minimum thickness shall be 6 inches. The concrete used shall be Structural Concrete, Box Culvert.

RIVERSIDE COUNTY FLOOD CONTROL MANHOLE SHAFT FOR CAST PIPE

DROP STEP DETAIL

DRAINAGE DETAILS

NO SCALE

DD-15

THIS PLAN ACCURATE FOR DRAINAGE WORK ONLY.

STATE OF CALIFORNIA - DEPARTMENT OF TRANSPORTATION
DESIGN
FUNCTIONAL SUPERVISOR: MARK PERTILE
CALCULATED-DESIGNED BY: MOHAMMAD ABDRABOH
CHECKED BY: ALAN R. BISI
REVISED BY
DATE REVISED

LAST REVISION 03-29-11
DATE PLOTTED => 11-JUL-2011
TIME PLOTTED => 13:53

Dist	COUNTY	ROUTE	POST MILES TOTAL PROJECT	SHEET No.	TOTAL SHEETS
08	Riv	91	15.6/21.6	289	2028

REGISTERED CIVIL ENGINEER 3-29-10 DATE

4-25-11
PLANS APPROVAL DATE

REGISTERED PROFESSIONAL ENGINEER ALAN R. BISI No. C62808 Exp. 6-30-12 CIVIL STATE OF CALIFORNIA

THE STATE OF CALIFORNIA OR ITS OFFICERS OR AGENTS SHALL NOT BE RESPONSIBLE FOR THE ACCURACY OR COMPLETENESS OF SCANNED COPIES OF THIS PLAN SHEET.

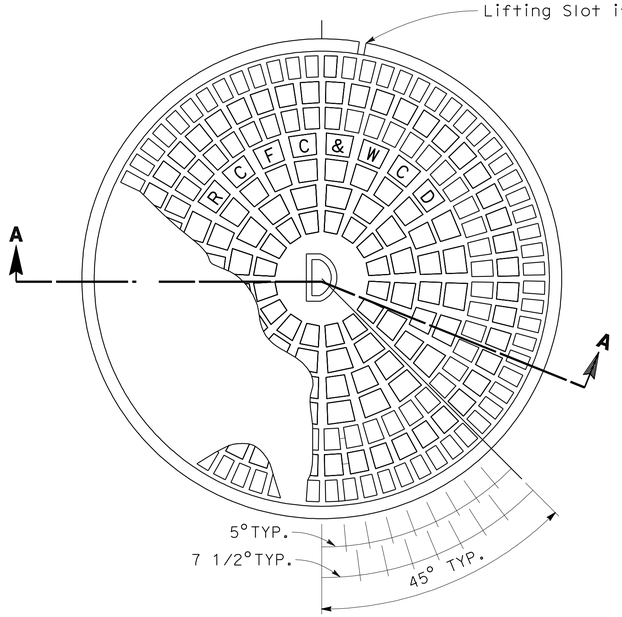

COVER FOR 24" CLEAR OPENING FRAME

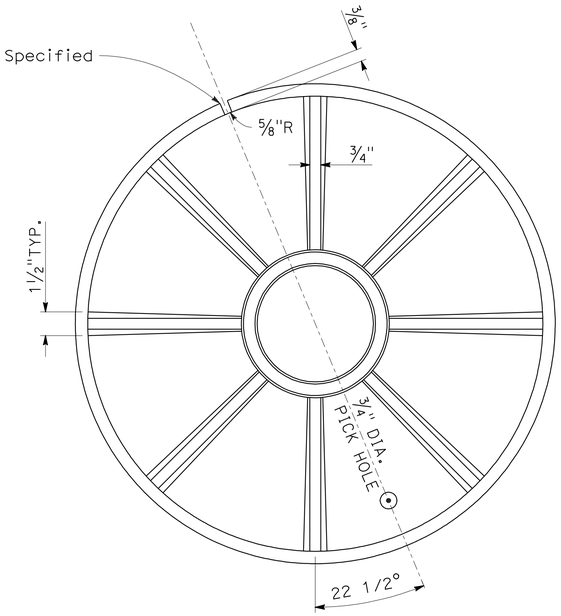

BOTTOM PLAN OF COVER

NOTES:

1. THE CAST IRON USED SHALL CONFORM WITH ASTM A-48 CLASS 35B.
2. THE FRAME AND COVER SHALL BE COATED WITH ASPHALTUM OR BITUMINOUS PAINT AFTER TESTING AND INSPECTION.
3. COVERS SHALL BE CAST WITH THE LETTERS "D" AND "RCFC&WCD". THE LETTER "D" SHALL BE APPROXIMATELY 2 1/2 INCHES HIGH WITH 1/2-INCH WIDTH AND PLACED IN THE CENTER OF THE COVER. ALL LETTERS SHALL BE FLUSH WITH THE FINISHED SURFACE OF COVER.
4. FOUNDRY IDENTIFYING MARK, HEAT AND DATE SHALL BE CAST ON THE BOTTOM OF THE COVER AND ON THE INSIDE OF THE FRAME.
5. IMPORTED COVERS AND FRAMES SHALL HAVE THE COUNTRY OF ORIGIN MARKING IN COMPLIANCE WITH FEDERAL REGULATIONS.
6. WEIGHT OF FRAME SHALL BE 265 POUNDS. WEIGHT OF COVER SHALL BE 175 POUNDS. ACTUAL WEIGHTS SHALL BE WITHIN A RANGE OF 95% TO 110%.
7. THE MANHOLE FRAME AND COVER SHALL BE INSPECTED BY THE ENGINEER PRIOR TO SHIPMENT TO THE JOB SITE. ACCEPTANCE WILL BE INDICATED BY THE AGENCY'S MARK.
8. THE PROOF-LOAD FOR TEST METHOD B OF THE STANDARD SPECIFICATIONS IS 40,700 POUNDS.
9. COVERS FOR MANHOLES LOCATED IN EASEMENTS, ALLEYS, PARKWAYS AND ALL OTHER PLACES EXCEPT PAVED STREETS SHALL BE PROVIDED WITH SOCKET SET SCREW LOCKING DEVICES. DRILL AND TAP TWO HOLES TO A DEPTH OF ONE INCH AT 90 DEGREES TO PICK HOLE AND INSTALL 3/4-INCH X 3/4-INCH STAINLESS STEEL SOCKET SET SCREWS WITH 3/8-INCH RECESSED HEX HEAD. ALL THREADS SHALL BE N.C.

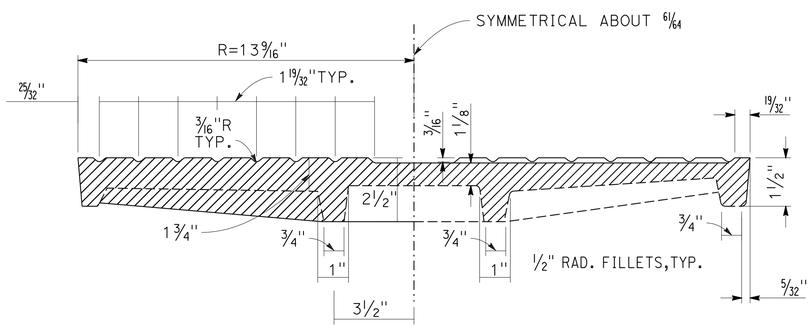

SECTION A-A

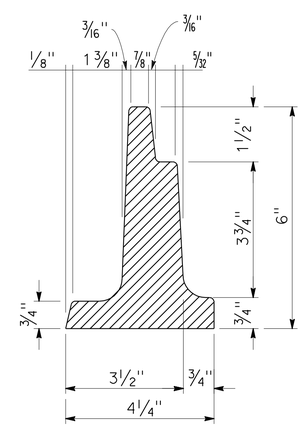

DETAIL OF FRAME

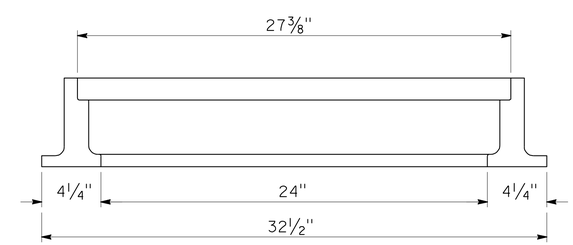

SECTION THRU FRAME

DRAINAGE SYSTEMS APPLICABLE TO THIS SHEET		
51c	51e	

RIVERSIDE COUNTY FLOOD CONTROL MANHOLE
24-INCH MANHOLE FRAME AND COVER

THIS PLAN ACCURATE FOR DRAINAGE WORK ONLY.

DRAINAGE DETAILS
NO SCALE

DD-16

STATE OF CALIFORNIA - DEPARTMENT OF TRANSPORTATION
Caltrans® DESIGN

FUNCTIONAL SUPERVISOR: MARK PERTILE
CALCULATED-DESIGNED BY: MOHAMMAD ABDRABOH
CHECKED BY: ALAN R. BISI
REVISED BY
DATE REVISED

LAST REVISION 03-29-11
DATE PLOTTED => 29-APR-2011
TIME PLOTTED => 17:36

Dist	COUNTY	ROUTE	POST MILES TOTAL PROJECT	SHEET No.	TOTAL SHEETS
08	Riv	91	15.6/21.6	290	2028

REGISTERED CIVIL ENGINEER 3-29-10 DATE

4-25-11
PLANS APPROVAL DATE

REGISTERED PROFESSIONAL ENGINEER ALAN R. BISI No. C62808 Exp. 6-30-12 CIVIL STATE OF CALIFORNIA

THE STATE OF CALIFORNIA OR ITS OFFICERS OR AGENTS SHALL NOT BE RESPONSIBLE FOR THE ACCURACY OR COMPLETENESS OF SCANNED COPIES OF THIS PLAN SHEET.

DRAINAGE SYSTEMS APPLICABLE TO THIS SHEET		
31a	34a	67a
67e	71a	

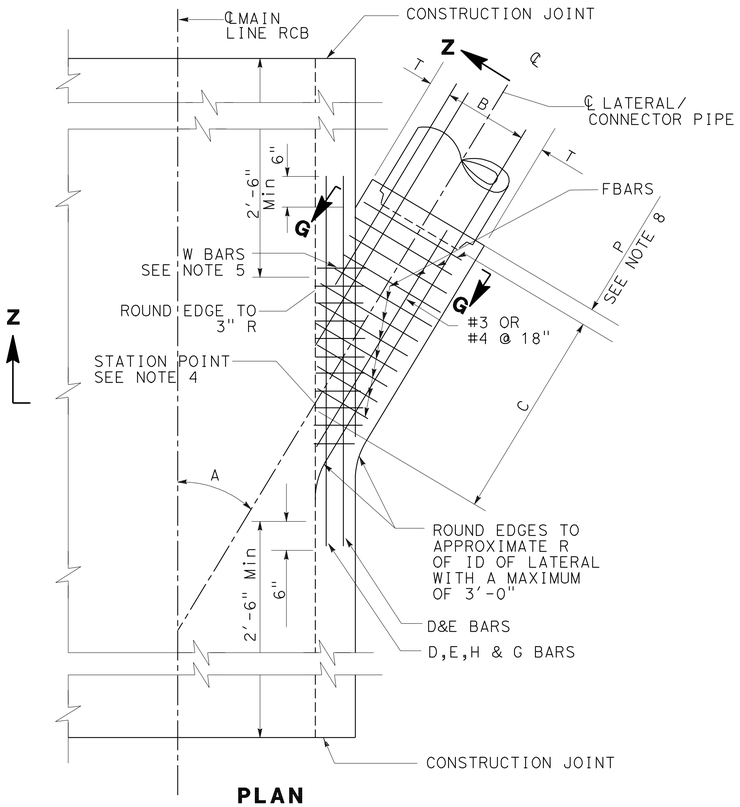

PLAN

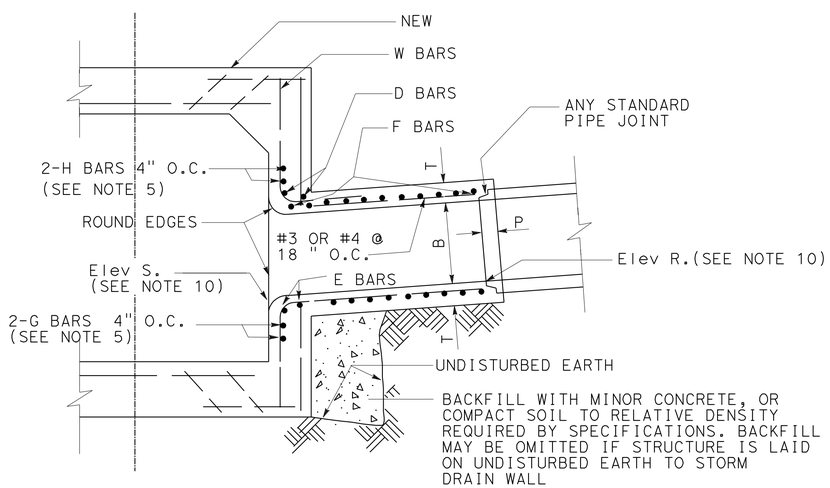

SECTION Z-Z

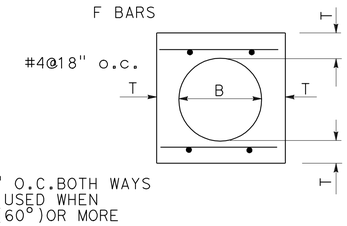

SECTION G-G

B	T	D.E.H.&G BARS	F BARS
12"	5"	#5	#4 @ 6" O.C.
15"	5"		
18"	5"		
21"	5"		
24"	5¼"		
27"	5½"		
30"	6"		
33"	6¼"		
36"	6½"		
39"	7"		
42"	7½"		
45"	7¾"		
48"	8"	#6	#5 @ 6"
51"	8½"		
54"	9"		
57"	9¼"		
60"	9½"		
63"	10"		
66"	10¼"		
69"	10¾"		
72"	11"		
78"	11¾"		
84"	12½"		
90"	13¼"	#7	#5 @ 6" O.C.
96"	14"		
102"	15½"		
108"	16"		
114"	16½"		
120"	17"		
126"	17"		
132"	17½"		

NOTES:

1. CALTRANS STANDARD DETAIL D82 MAY BE SUBSTITUTED FOR THIS STRUCTURE IF ANGLE "A" IS 45° OR GREATER.
2. CONCRETE SHALL BE OF SAME CLASS AS BOX CULVERT.
3. VALUES FOR A, B AND C SHALL BE SHOWN ON THE PROJECT DRAWINGS. ELEVATION R AND ELEVATION S SHALL BE SHOWN WHEN REQUIRED PER NOTE 10.
4. STATIONS SPECIFIED ON THE PROJECT DRAWINGS APPLY AT THE INTER-SECTION OF CENTER LINES OF MAIN LINE AND LATERALS. EXCEPT THAT STATIONS FOR CATCH BASIN CONNECTOR PIPES APPLY AT INSIDE WALL OF STRUCTURE
5. REINFORCING STEEL SHALL CONFORM TO THE REQUIREMENT OF CALTRANS STANDARD SPECIFICATIONS, SECTION 52, AND SHALL TERMINATE 1½" CLEAR OF CONCRETE SURFACE UNLESS OTHERWISE SHOWN.
   a. W BARS ARE OF SIZE AND SPACING SPECIFIED FOR WALL STEEL ON PROJECT DRAWINGS,AND SHALL BE CUT IN CENTER OF OPENING AND BENT INTO TOP AND BOTTOM OF JUNCTION STRUCTURE.
   b. OMIT H BARS WHEN SOFFIT OF SPUR IS 12" OR LESS BELOW SOFFIT OF MAIN LINE, AND OMIT G BARS WHEN INVERT OF SPUR IS 12" OR LESS ABOVE FLOOR OF MAIN LINE
6. JUNCTION STRUCTURE SHALL BE POURED MONOLITHICALLY WITH MAIN LINE, MANHOLE OR TRANSITION STRUCTURE
7. FLOOR OF STRUCTURE SHALL BE STEEL-TROWELED TO THE SPRING LINE
8. WHEN CONNECTING TO EXISTING RCB, BREAKOUT LIMITS AND DETAILS SHALL BE SHOWN ON THE DRAINAGE DETAIL No. 11
9. EMBEDMENT, P, SHALL BE 5" FOR B=96" OR LESS. 8" FOR B GREATER THAN 96".
10. IF ELEVATION R AND ELEVATION S ARE NOT SHOWN ON THE PROJECT DRAWINGS THEN THE INLET OPENING SHALL FALL 6" BELOW THE SOFFIT OF THE MAIN LINE WITH THE INLET PIPE LAID ON A STRAIGHT GRADE FROM MAIN LINE TO CATCH BASIN OR TO GRADE BREAK IN INLET. LINE ELEVATION S SHALL BE SHOWN ON THE PROJECT DRAWINGS IF THE INLET OPENING FALLS MORE THAN 6" BELOW THE SOFFIT OF THE MAIN LINE WITH THE INLET PIPE LAID ON A STRAIGHT GRADE AS STATED ABOVE ELEVATION R SHALL BE SHOWN ON THE PROJECT DRAWINGS ONLY WHEN A STUB IS TO BE PROVIDED FOR A FUTURE CONNECTION.
11. LATERALS OR CONNECTOR PIPES 24" OR LESS IN DIAMETER SHALL BE NO MORE THAN 5' ABOVE THE INVERT. LATERALS OR CONNECTOR PIPES 27" OR LARGER IN DIAMETER SHALL BE NO MORE THAN 18" ABOVE THE INVERT, WITH THE EXEPTION THAT CATCH BASIN CONNECTOR PIPES LESS THAN 50' IN LENGTH SHALL NOT BE MORE THAN 5' ABOVE THE INVERT.
12. THE NEED FOR AN EDGE BEAM AND/OR ADDITIONAL REINFORCEMENT SHALL BE INVESTIGATED BY THE ENGINEER FOR ANY ONE OF THE FOLLOWING CONDITIONS:
   a. ANGLE A IS LESS THAN 30°
   b. TOP OF INLET PIPE IS LESS THAN 6" BELOW THE SOFFIT
   c. FLOW LINE OF INLET PIPE IS LESS THAN 7" ABOVE THE THE FLOOR OF THE RCB AT THE INSIDE FACE.
13. THE PIPE TO RCB JUNCTION STRUCTURE IS PER AMERICAN PUBLIC WORKS ASSOCIATION (APWA) STANDARD PLAN No. 333-1

JUNCTION STRUCTURE PIPE TO NEW RCB

THIS PLAN ACCURATE FOR DRAINAGE WORK ONLY.

DRAINAGE DETAILS

NO SCALE

DD-17

STATE OF CALIFORNIA - DEPARTMENT OF TRANSPORTATION
Caltrans DESIGN
FUNCTIONAL SUPERVISOR MARK PERTILE
CALCULATED-DESIGNED BY MOHAMMAD ABDRABOH
CHECKED BY ALAN R. BISI
REVISED BY
DATE REVISED

LAST REVISION 03-29-11
DATE PLOTTED => 29-APR-2011
TIME PLOTTED => 17:36

Dist	COUNTY	ROUTE	POST MILES TOTAL PROJECT	SHEET No.	TOTAL SHEETS
08	Riv	91	15.6/21.6	291	2028

REGISTERED CIVIL ENGINEER 3-29-10 DATE

4-25-11
PLANS APPROVAL DATE

REGISTERED PROFESSIONAL ENGINEER ALAN R. BISI No. C62808 Exp. 6-30-12 CIVIL STATE OF CALIFORNIA

THE STATE OF CALIFORNIA OR ITS OFFICERS OR AGENTS SHALL NOT BE RESPONSIBLE FOR THE ACCURACY OR COMPLETENESS OF SCANNED COPIES OF THIS PLAN SHEET.

NOTES:

1. VALUES FOR A, B AND C SHALL BE SHOWN ON THE PROJECT DRAWINGS. ELEVATION R AND ELEVATION S SHALL BE SHOWN WHEN REQUIRED PER NOTE 6.

2. STATIONS SPECIFIED ON THE PROJECT DRAWINGS APPLY AT THE INTERSECTION OF CENTER LINES OF MAIN LINE AND LATERALS. EXCEPT THAT STATIONS FOR CATCH BASIN CONNECTOR PIPES APPLY AT INSIDE WALL OF STRUCTURE.

3. REINFORCING STEEL SHALL CONFORM TO ASTM A 615M, GRADE 300. (ASTM A 615, GRADE 40), AND SHALL TERMINATE 1½" CLEAR OF CONCRETE SURFACE UNLESS OTHERWISE SHOWN.
   a. W BARS ARE OF SIZE AND SPACING SPECIFIED FOR WALL STEEL ON PROJECT DRAWINGS, AND SHALL BE CUT IN CENTER OF OPENING AND BENT INTO TOP AND BOTTOM OF JUNCTION STRUCTURE.
   b. OMIT H BARS WHEN SOFFIT OF SPUR IS 12" OR LESS BELOW SOFFIT OF MAIN LINE, AND OMIT G BARS WHEN INVERT OF SPUR IS 12" OR LESS ABOVE FLOOR OF MAIN LINE.

4. FLOOR OF STRUCTURE SHALL BE STEEL-TROWELED TO THE SPRING LINE.

5. EMBEDMENT, P, SHALL BE 5" FOR B = 96" OR LESS
   8" FOR B OVER 96".

6. IF ELEVATION R AND ELEVATION S ARE NOT SHOWN ON THE PROJECT DRAWINGS THEN THE INLET OPENING SHALL FALL 6" BELOW THE SOFFIT OF THE MAIN LINE WITH THE INLET PIPE LAID ON A STRAIGHT GRADE FROM MAIN LINE TO CATCH BASIN OR TO GRADE BREAK IN INLET LINE. ELEVATION S SHALL BE SHOWN ON THE PROJECT DRAWINGS IF THE INLET OPENING FALLS MORE THAN 6" BELOW THE SOFFIT OF THE MAIN LINE WITH THE INLET PIPE LAID ON A STRAIGHT GRADE AS STATED ABOVE. ELEVATION R SHALL BE SHOWN ON THE PROJECT DRAWINGS ONLY WHEN A STUB IS TO BE PROVIDED FOR A FUTURE CONNECTION.

7. LATERALS OR CONNECTOR PIPES 24" OR LESS IN DIAMETER SHALL BE NO MORE THAN 5' ABOVE THE INVERT. LATERALS OR CONNECTOR PIPES 27" OR LARGER IN DIAMETER SHALL BE NO MORE THAN 18" ABOVE THE INVERT, WITH THE EXCEPTION THAT CATCH BASIN CONNECTOR PIPES LESS THAN 50 FEET IN LENGTH SHALL NOT BE MORE THAN 5 FEET ABOVE INVERT.

8. THE NEED FOR AN EDGE BEAM AND/OR ADDITIONAL REINFORCEMENT SHALL BE INVESTIGATED BY THE ENGINEER FOR ANY ONE OF THE FOLLOWING CONDITIONS:
   a. ANGLE A IS LESS THAN °30
   b. TOP OF INLET PIPE IS LESS THAN 6" BELOW THE SOFFIT
   c. FLOW LINE OF INLET PIPE IS LESS THAN 7" ABOVE THE FLOOR OF THE RCB AT THE INSIDE FACE.

9. DIMENSIONS SHOWN ON THIS PLAN FOR ENGLISH UNIT.

11. MODIFIED JUNCTION STRUCTURE - PIPE TO RCB IS PER AMERICAN PUBLIC WORKS ASSOCIATION-SOUTHERN CALIFORNIA CHAPTER, STANDARD PLAN NO.333-1. THIS PLAN ACCURATE FOR DRAINAGE WORK ONLY.

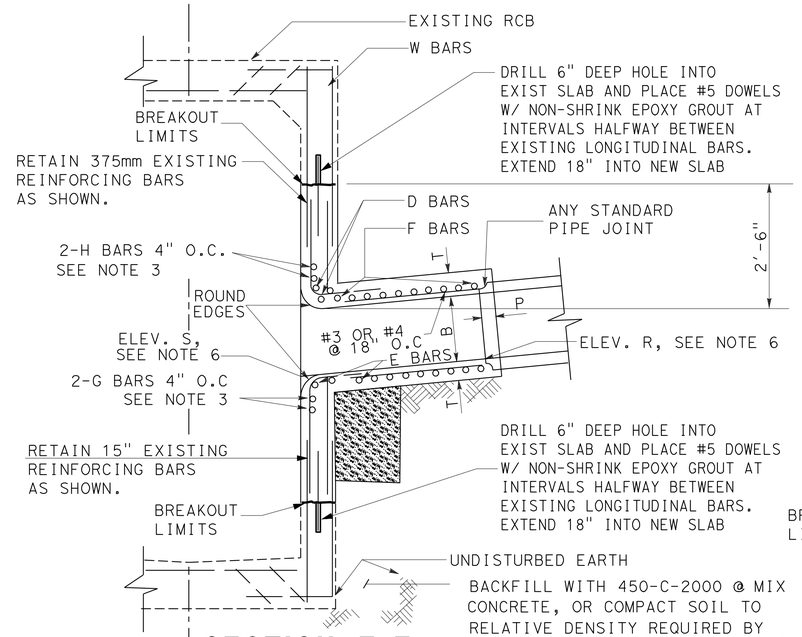

SECTION Z-Z

B	T	D,E,H & G BARS	F BARS
12"	5"	#5	#4 @ 6" OC
15"	5"		
18"	5"		
21"	5"		
24"	5¼"		
27"	5¼"		
30"	6"		
33"	6¼"		
36"	6½"		
39"	7"		
42"	7½"	#6	#5 @ 6" OC
45"	7¾"		
48"	8"		
51"	8½"		
54"	9"		
57"	9¼"		
60"	9½"		
63"	10"		
66"	10¼"		
69"	10¾"		
72"	11"		
78"	11¾"		
64"	12½"		
90"	13¼"	#7	#5 @ 6" OC
96"	14"		
102"	15½"		
108"	16"		
114"	16½"		

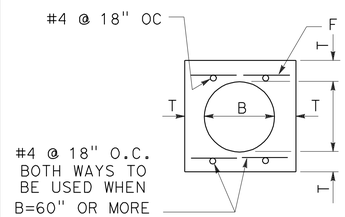

SECTION G-G

DRAINAGE SYSTEMS APPLICABLE TO THIS SHEET		
6a	110a	

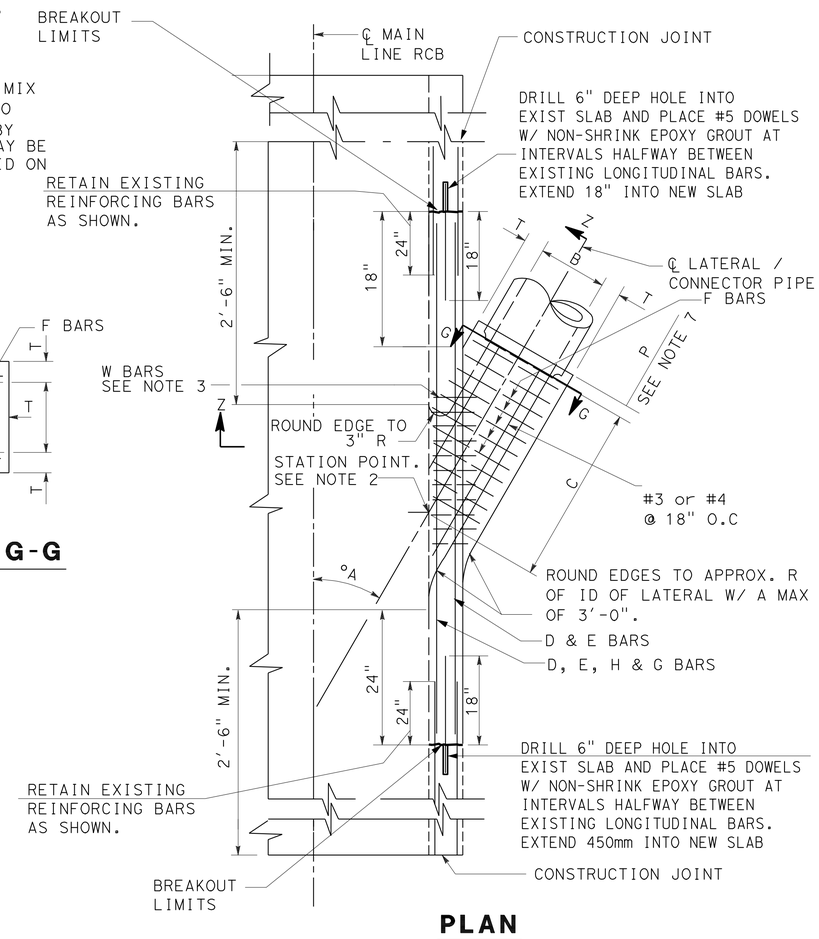

PLAN

MODIFIED JUNCTION STRUCTURE (PIPE TO EXISTING RCB)

THIS PLAN ACCURATE FOR DRAINAGE WORK ONLY.

DRAINAGE DETAILS

NO SCALE

DD-18

STATE OF CALIFORNIA - DEPARTMENT OF TRANSPORTATION
Caltrans DESIGN
FUNCTIONAL SUPERVISOR MARK PERTILE
CALCULATED-DESIGNED BY MOHAMMAD ABDRABOH
CHECKED BY ALAN R. BISI
REVISED BY
DATE REVISED

LAST REVISION 03-29-11
DATE PLOTTED => 29-APR-2011
TIME PLOTTED => 17:36

Dist	COUNTY	ROUTE	POST MILES TOTAL PROJECT	SHEET No.	TOTAL SHEETS
08	Riv	91	15.6/21.6	292	2028

REGISTERED CIVIL ENGINEER 3-29-10 DATE

4-25-11
PLANS APPROVAL DATE

REGISTERED PROFESSIONAL ENGINEER ALAN R. BISI No. C62808 Exp. 6-30-12 CIVIL STATE OF CALIFORNIA

THE STATE OF CALIFORNIA OR ITS OFFICERS OR AGENTS SHALL NOT BE RESPONSIBLE FOR THE ACCURACY OR COMPLETENESS OF SCANNED COPIES OF THIS PLAN SHEET.

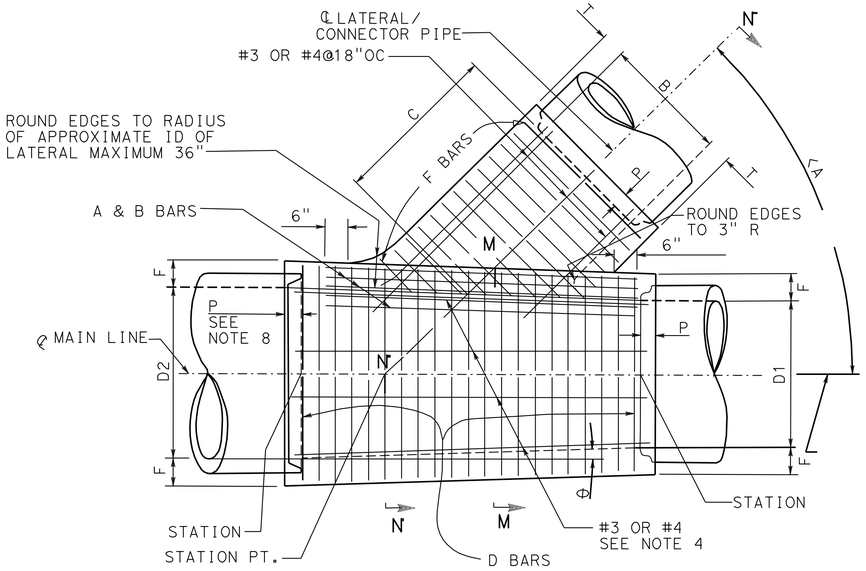

PLAN

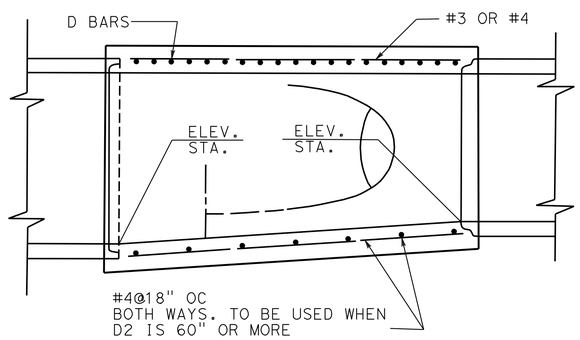

LONGITUDINAL SECTION

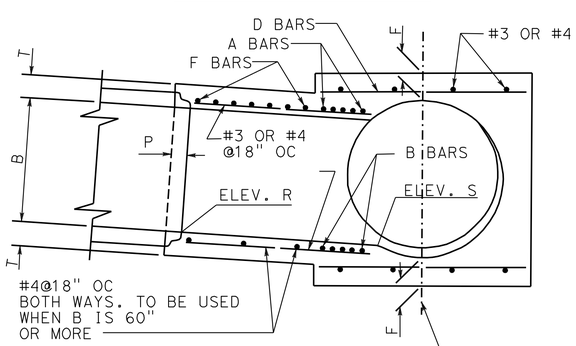

SECTION N-N-N
PROJECTED ON M-M-N

TABLE

FOR DIMENSIONS AND BAR SIZES

D2 OR B INCHES	F OR T INCHES	A OR B BARS	D OR F BARS	P (RCP)
12	4	#5 @ 3" OC	#4 @ 6" OC	5"
15	4¼			
18	4½			
21	5			
24	5¼			
27	5½			
30	6			
33	6¼			
36	6½			
39	7			
42	7½	#6 @ 3" OC	#5 @ 6" OC	
45	7¾			
48	8			
51	8½			
54	9			
57	9¼			
60	9½			
63	10			
66	10¼			
69	10¾			
72	11			
78	11¾			
84	12½			
90	13¼	#7 @ 3" OC	#6 @ 6" OC	
96	14			
102	15½			
108	16			
114	16½			
120	17			
126	17			
132	17½			8"
138	17½			
144	18			

NOTES

1. THE HORIZONTAL ANGLE OF CONVERGENCE OF DIVERGENCE, θ, SHALL NOT EXCEED 5° 45′.
2. VALUES FOR A, B, C, D1 AND D2 ARE SHOWN ON THE PROJECT DRAWINGS. ELEVATION R AND ELEVATION S ARE SHOWN WHEN REQUIRED BY NOTE 11.
3. FLOOR OF STRUCTURE SHALL BE STEEL TROWELED TO SPRING LINE.
4. REINFORCEMENT STEEL SHALL CONFORM TO CALTRANS STANDARD SPECIFICATIONS, SECTION 52, AND SHALL TERMINATE 1½" CLEAR OF CONCRETE SURFACES UNLESS OTHERWISE SHOWN. LONGITUDINAL BARS SHALL BE #3 OR #4 @ 18" OC OR LESS. FOR STRUCTURES WHERE COVER EXCEEDS 2.5", USE #4 @ 12" O.C. AND ADD VERTICAL REINFORRCEMENT TO SIDE WALLS, USE #8 @ 6" O.C,TYPICAL.
5. OPTIONAL CONSTRUCTION: IF JUNCTION STRUCTURE DETAIL 14 IS SPECIFIED ON THE IMPROVEMENT PLAN , THE CONTRACTOR SHALL HAVE THE OPTION OF CONSTRUCTING THIS JUNCTION STRUCTURE , IN WHICH CASE CONSTRUCTION DATA WILL BE FURNISHED BY THE RESIDENT ENGINEER.
6. ELEVATION S APPLIES AT INSIDE WALL OF STRUCTURE.
7. TRANSITION STRUCTURE SHALL BE POURED IN ONE CONTINUOUS OPERATION, EXCEPT THAT THE CONTRACTOR SHALL HAVE THE OPTION OF PLACING AT THE SPRING LINE A CONSTRUCTION JOINT LONGITUDINAL KEYWAY.
8. THE LENGTH OF THE STRUCTURE MAY BE INCREASED AT THE OPTION OF THE CONTRACTOR TO MEET RCP ENDS, USING D BARS. LONGITUDINAL AND BOTTOM REINFORCMENT IN EXTENDED PORTION OF SAME DIAMETER AND SPACING AS SPECIFIED IN THE TABLE, BUT ANY CHANGE IN THE LOCATION OF SPUR MUST BE APPROVED BY THE ENGINEER.
9. EMBEDMENT P SHALL BE AS SPECIFIED IN THE TABLE, UNLESS OTHERWISE SHOWN ON THE PROJECT DRAWINGS.
10. WHEN THERE IS NO SPUR REQUIRED, A & B BARS SHALL BE OMITTED.
11. WHEN ELEVATION R AND ELEVATION S ARE NOT SHOWN ON PROJECT DRAWINGS, INLET PIPE SHALL ENTER MAIN LINE RADIALLY. WHEN INLET PIPE ENTERS MAIN LINE OTHER THAN RADIALLY, ELEVATION S SHALL BE SHOWN ON PROJECT DRAWINGS, AND INLET PIPE SHALL BE LAID ON A STRAIGHT GRADE FROM ELEVATION S TO CATCH BASIN OR GRADE BREAK IN INLET LINE. ELEVATION R SHALL BE SHOWN ON PROJECT DRAWINGS ONLY WHEN STUB IS TO BE PROVIDED IN MAIN LINE FOR FUTURE CONSTRUCTION OF INLET PIPE.
12. THE MAXIMUM COVER ABOVE THIS STRUCTURE SHALL BE 25′.
13. CONCRETE SHALL BE STRUCTURAL CONCRETE, BOX CULVERT FOR STRUCTURES WHERE COVER EXCEEDS 25′. MINOR CONCRETE MAY BE USED FOR STRUCTURES WITH LESS THAN 25′ COVER.
14. THIS PIPE TO PIPE JUNCTION STRUCTURE IS PER AMERICAN PUBLIC WORKS ASSOCIATION (APWA), STANDARD PLAN No. 340-1

TRANSITION STRUCTURE PIPE TO PIPE

THIS PLAN ACCURATE FOR DRAINAGE WORK ONLY.

DRAINAGE DETAILS

NO SCALE

DD-19

STATE OF CALIFORNIA - DEPARTMENT OF TRANSPORTATION
Caltrans® DESIGN
FUNCTIONAL SUPERVISOR MARK PERTILE
CALCULATED-DESIGNED BY MOHAMMAD ABDRABOH
CHECKED BY ALAN R. BISI
REVISED BY
DATE REVISED

LAST REVISION 03-29-11
DATE PLOTTED => 11-JUL-2011
TIME PLOTTED => 13:48

Dist	COUNTY	ROUTE	POST MILES TOTAL PROJECT	SHEET No.	TOTAL SHEETS
08	Riv	91	15.6/21.6	293	2028

REGISTERED CIVIL ENGINEER 3-29-10 DATE

4-25-11
PLANS APPROVAL DATE

REGISTERED PROFESSIONAL ENGINEER ALAN R. BISI No. C62808 Exp. 6-30-12 CIVIL STATE OF CALIFORNIA

THE STATE OF CALIFORNIA OR ITS OFFICERS OR AGENTS SHALL NOT BE RESPONSIBLE FOR THE ACCURACY OR COMPLETENESS OF SCANNED COPIES OF THIS PLAN SHEET.

DRAINAGE SYSTEMS APPLICABLE TO THIS SHEET		
35c	59a	65a

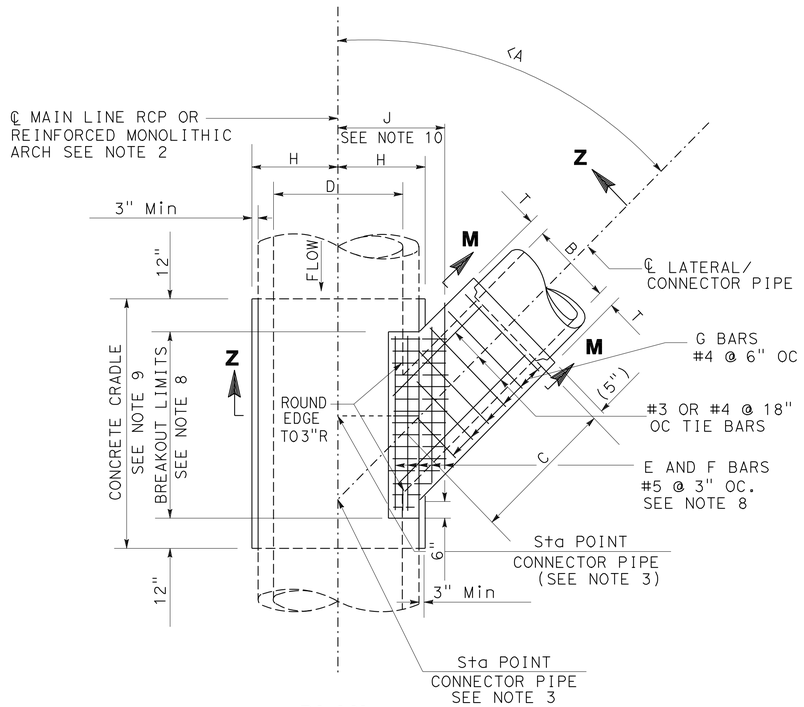

PLAN

TABLE OF VALUES FOR T	
B	**T**
12"	5"
15"	5"
18"	5"
21"	5"
24"	5½"
27"	5½"
30"	6"
33"	6½"
36"	6½"
39"	7"

NOTES

1. THIS JUNCTION STRUCTURE SHALL BE USED WHEN THE OUTSIDE DIAMETER OF THE LATERAL IS GREATER THAN ½ THE INSIDE DIAMETER D OF THE MAIN LINE: OR WHEN THE INSIDE DIAMETER B OF THE LATERAL IS GREATER THAN 24". B SHALL NOT EXCEED.75 D OR 39".
2. IF THE MAIN LINE IS A REINFORCED MONOLITHIC ARCH STORM DRAIN, D SHALL REFER TO THE CLEAR SPAN OF THE ARCH. REINFORCING STEEL SHALL BE CUT AND BENT INTO THE JUNCTION STRUCTURE IN THE SAME MANNER AS FOR A PIPE. A CONCRETE CRADLE IS NOT REQUIRED FOR A REINFORCED MONOLITHIC ARCH.
3. STATIONS SHOWN ON THE PROJECT DRAWINGS FOR LATERALS APPLY AT THE INTERSECTION OF CENTER LINES OF MAIN LINE AND LATERAL. STATIONS SHOWN ON THE PROJECT DRAWINGS FOR CATCH BASIN CONNECTOR PIPES APPLY AT THE INTERSECTION OF THE INSIDE WALL OF THE MAIN LINE WITH THE CONNECTOR PIPE CENTER LINE.
4. VALUES FOR A,B,C AND D SHALL BE SHOWN ON THE PROJECT DRAWINGS. ELEVATION R AND ELEVATION S SHALL BE SHOWN ONLY WHEN REQUIRED PER NOTE 5.
5. a. ELEVATIONS R AND S NEED NOT BE SHOWN ON THE PROJECT DRAWINGS IF THE INLET PIPE IS TO ENTER THE MAIN LINE RADIALLY.
   b. ELEVATION R SHALL BE SHOWN ON THE PROJECT DRAWINGS ONLY IF A STUB IS TO BE PROVIDED IN THE MAIN LINE FOR FUTURE CONNECTION OF AN INLET PIPE.
   c. ELEVATION S SHALL BE SHOWN ON THE PROJECT DRAWINGS IF AN INLET PIPE IS TO ENTER THE MAIN LINE OTHER THAN RADIALLY. INLET PIPE SHALL BE LAID ON A STRAIGHT GRADE FROM ELEVATION S TO THE CATCH BASIN OR GRADE BREAK IN LINE.
6. THE INLET PIPE SHALL ENTER THE MAIN LINE RADIALLY UNLESS OTHERWISE INDICATED. THE INLET PIPE MAY ENTER THE MAIN LINE OTHER THAN RADIALLY IF ANGLE A IS GREATER THAN 45°, B IS LESS THAN OR EQUAL TO 24" AND THE OUTSIDE DIAMETER OF THE INLET PIPE IS LESS THAN 0.5D: OTHERWISE, DETAIL 16 SHALL BE USED.
7. NO MORE THAN ONE OPENING SHALL BE MADE IN ANY ONE SECTION OF PIPE.
8. THE OPENING FOR THE BREAKOUT SHALL BE RECTANGULAR AND CUT NORMAL TO THE PIPE SURFACE WITHOUT DAMAGING THE REINFORCING STEEL. THE TRANSVERSE REINFORCEMENT OF THE MAIN LINE SHALL BE CUT AT THE CENTER OF THE OPENING AND BENT INTO THE TOP AND BOTTOM SLABS OF THE SPUR.
9. THE MAIN LINE SHALL BE REINFORCED WITH A CONCRETE CRADLE AND ENCASEMENT (AS APPLICABLE). A CONCRETE ENCASEMENT IS REQUIRED IF A JOINT IN THE MAIN LINE FALLS WITHIN THE LIMITS OF THE CRADLE. THE CONCRETE ENCASEMENT SHALL EXTEND 12" ABOVE THE TOP OF THE MAIN LINE AND TO THE LIMITS OF THE CRADLE.
   IF CONNECTING TO AN EXISTING STORM DRAIN, PORTION OF CRADLE OPPOSITE INLET MAY BE OMITTED.
10. REINFORCING STEEL SHALL CONFORM TO THE REQUIREMENTS OF CALTRANS STANDARD SPECIFICATIONS, SECTION 52, AND BE PLACED 1½" CLEAR FROM CONCRETE SURFACES. UNLESS OTHERWISE SHOWN, F BARS SHALL BE CARRIED TO A POINT NOT LESS THAN J DISTANCE FROM THE CENTERLINE WITH J=7D/12 + 6".
11. FLOOR OF THE SPUR SHALL BE STEEL-TROWELED TO THE SPRING LINE OF THE SPUR.
12. THE PIPE TO PIPE JUNCTION STRUCTURE IS PER AMERICAN PUBLIC WORKS ASSOCIATION STANDARD PLAN No. 331-2

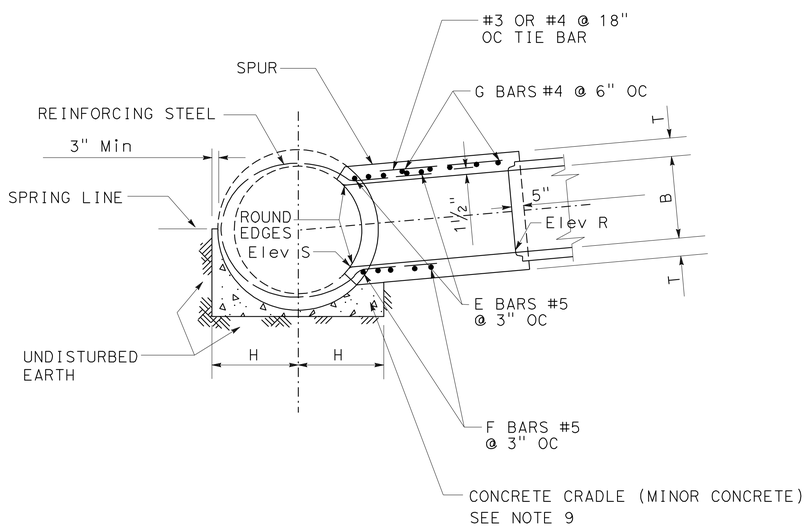

SECTION Z-Z

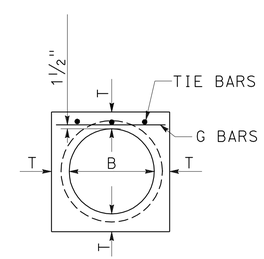

SECTION M-M

JUNCTION STRUCTURE PIPE TO PIPE

THIS PLAN ACCURATE FOR DRAINAGE WORK ONLY.

DRAINAGE DETAILS

NO SCALE

DD-20

STATE OF CALIFORNIA - DEPARTMENT OF TRANSPORTATION
Caltrans® DESIGN
FUNCTIONAL SUPERVISOR MARK PERTILE
CALCULATED-DESIGNED BY MOHAMMAD ABDRABOH
CHECKED BY ALAN R. BISI
REVISED BY
DATE REVISED

LAST REVISION 03-29-11
DATE PLOTTED => 29-APR-2011
TIME PLOTTED => 17:37

Dist	COUNTY	ROUTE	POST MILES TOTAL PROJECT	SHEET No.	TOTAL SHEETS
08	Riv	91	15.6/21.6	294	2028

REGISTERED CIVIL ENGINEER 3-29-10 DATE

4-25-11
PLANS APPROVAL DATE

REGISTERED PROFESSIONAL ENGINEER ALAN R. BISI No. C62808 Exp. 6-30-12 CIVIL STATE OF CALIFORNIA

THE STATE OF CALIFORNIA OR ITS OFFICERS OR AGENTS SHALL NOT BE RESPONSIBLE FOR THE ACCURACY OR COMPLETENESS OF SCANNED COPIES OF THIS PLAN SHEET.

DRAINAGE SYSTEMS APPLICABLE TO THIS SHEET		
53a	108a	

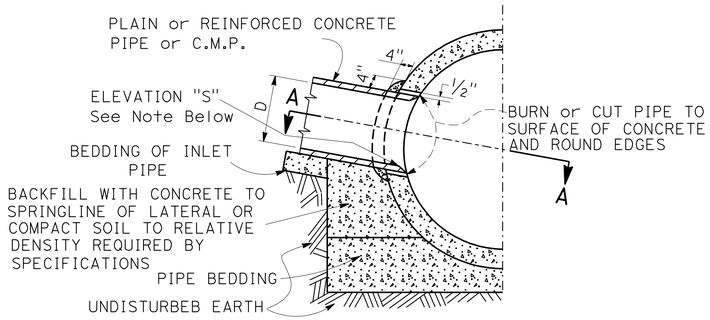

SECTION B-B

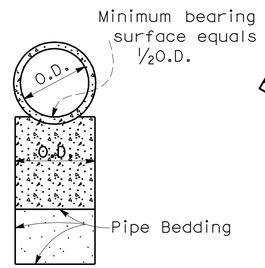

SECTION C-C

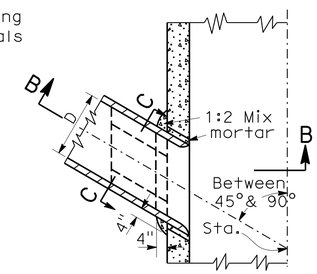

SECTION A-A

CASE-1-SIDE INLET

NOTES CASES 1 & 2

1. D shall be 24" or less, and in no case shall the outside diameter of the inlet pipe exceed one-half the inside diameter of the main line. If angle is 45° or less , use Case 1. If angle is greater than 45°, use Case 2.
2. ℄ of inlet shall be an radius of main storm drain except when elevation "S" is shown on project drawing PROFILE.
3. The minimum opening into the existing storm drain shall be the outside diameter of the connecting pipe plus 1 inch.
4. All corrugated metal pipe and fittings shall be galvanized.
5. Sta. at FL & center of pipe, shown on project dwg. PROFILE.

NOTES CASES -3- SADDLE CONNECTION

1. Connections to pipes 21" or less in diameter without junction structures or precast Y branches shall be made with saddles.
2. Trim or cut saddle to fit snugly over the outside of the main pipe and so it's axis will be on the line and grade of the connecting pipe.
3. The opening into the pipe shall be cut and trimmed to fit the saddle so that no part will project within the bore of the the saddle pipe.
4. The connecting pipe shall be supported as shown in Case 1 and 2.

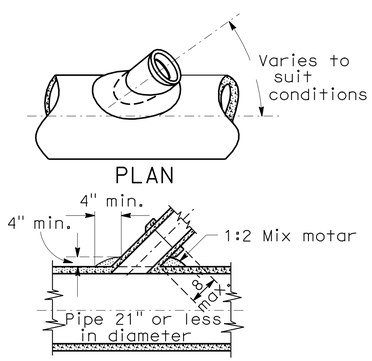

CASE-3- SADDLE CONNECTION

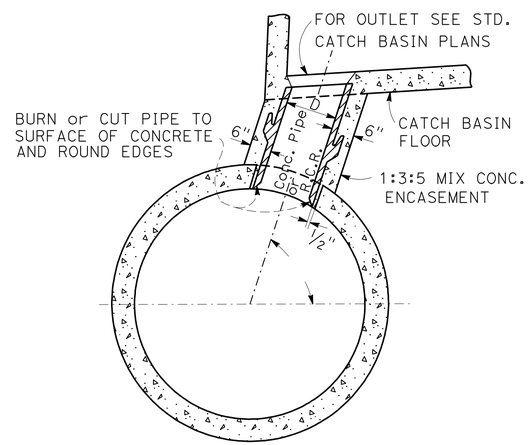

CASE-2

CATCH BASIN ABOVE STORM DRAIN

NOTE

ALL CONNECTOR PIPE (within the angles specified for Case 2) shall be encased when laid within the main line excavated trench, or when laid on fill which has not been densified.

SADDLE CONNECTION DETAIL

DRAINAGE DETAILS

NO SCALE

D-21

THIS PLAN ACCURATE FOR DRAINAGE WORK ONLY.

STATE OF CALIFORNIA - DEPARTMENT OF TRANSPORTATION
Caltrans DESIGN

FUNCTIONAL SUPERVISOR: MARK PERTILE
CALCULATED-DESIGNED BY: MOHAMMAD ABDRABOH
CHECKED BY: ALAN R. BISI
REVISED BY
DATE REVISED

LAST REVISION 03-29-11 | DATE PLOTTED => 29-APR-2011 | TIME PLOTTED => 17:37

Dist	COUNTY	ROUTE	POST MILES TOTAL PROJECT	SHEET No.	TOTAL SHEETS
08	Riv	91	15.6/21.6	295	2028

REGISTERED CIVIL ENGINEER 3-29-10 DATE

4-25-11
PLANS APPROVAL DATE

REGISTERED PROFESSIONAL ENGINEER ALAN R. BISI No. C62808 Exp. 6-30-12 CIVIL STATE OF CALIFORNIA

THE STATE OF CALIFORNIA OR ITS OFFICERS OR AGENTS SHALL NOT BE RESPONSIBLE FOR THE ACCURACY OR COMPLETENESS OF SCANNED COPIES OF THIS PLAN SHEET.

DRAINAGE SYSTEMS APPLICABLE TO THIS SHEET		
79a	101a	102i
103a		

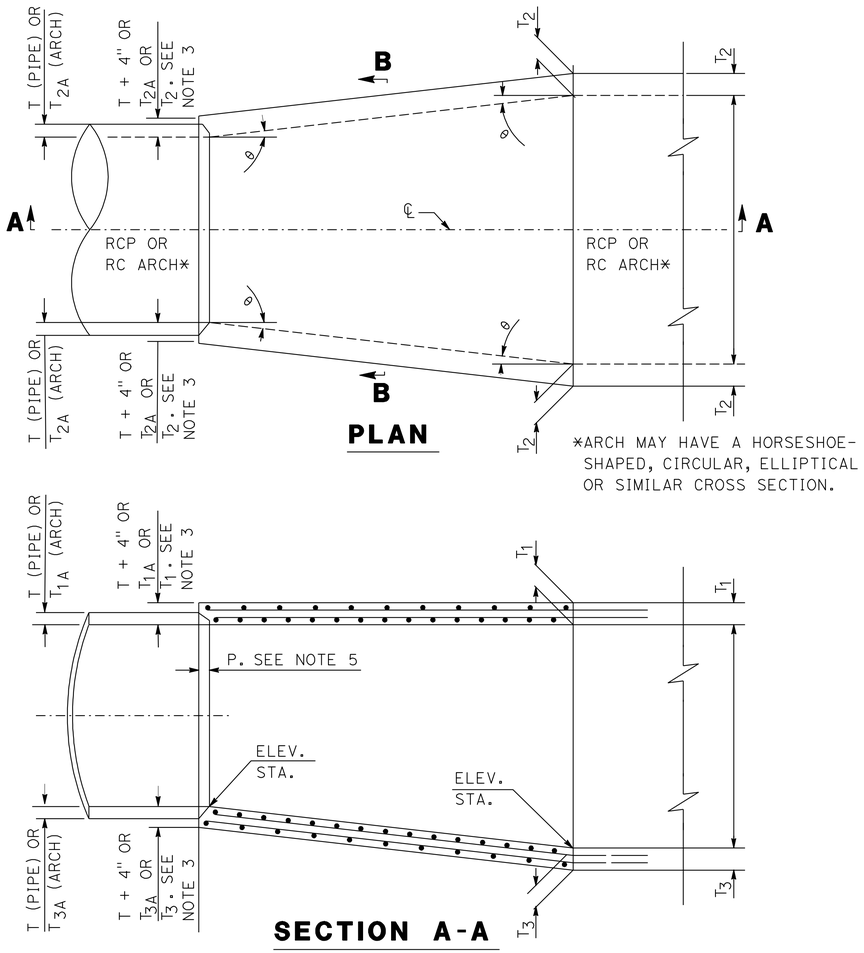

*ARCH MAY HAVE A HORSESHOE-SHAPED, CIRCULAR, ELLIPTICAL OR SIMILAR CROSS SECTION.

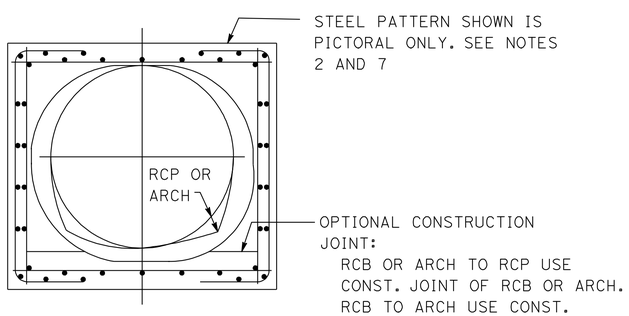

NOTES:

1. THE HORIZONTAL ANGLE OF DIVERGENCE OR CONVERGENCE, θ, SHALL NOT EXCEED 5°45′.
2. REINFORCING STEEL BAR SIZES, SPACING, PATTERN AND COVER OVER THE STEEL SHALL BE AS FOLLOWS:
   RCB TO RCP AND RCB TO ARCH - THAT OF RCB SECTION.
   ARCH TO RCP - THAT OF ARCH SECTION.
   ARCH TO ARCH - THAT OF ARCH SECTION HAVING THE THICKER WALLS. THE BAR LENGTHS SHALL VARY UNIFFORMILY THROUGHOUT THE TRANSITION.
3. THE CONCRETE THICKNESS SHALL BE AS FOLLOWS:
   RCB TO RCP AND ARCH TO RCP - THAT OF ARCH OF RCB SECTION UNLESS THE WALL THICKNESS OF THE RCP PLUS 4" GREATER, IN WHICH CASE THE CONCRETE THICKNESS SHALL VARY UNIFORMLY FROM THAT OF THE ARCH OR RCB SECTION TO THAT OF THE RCP WALL PLUS 4".
4. THE INTERIOR SURFACE SHALL BE SMOOTH AND VARY UNIFORMLY BETWEEN THE TWO ADJOINING SECTIONS.
5. AT RCP JUNCTURE, EMBEDMENT P SHALL BE 5" FOR PIPE SIZE OF 96" OR LESS, AND 8" FOR PIPE SIZES OVER 96".
6. f'_c = 28 MPa (4000 PSI) AT 28 DAYS AND THE CONCRETE SHALL BE THE SAME MIX AS THE ADJACENT RCB.
7. ALL STEEL, EXCEPT LONGITUDINAL STEEL SHALL BE GRADE 60 BILLET STEEL CONFORMING TO ASTM A 615 AND SHALL TERMINATE 1½" CLEAR OF CONCRETE SURFACE UNLESS OTHERWISE SHOWN.
8. KEYED CONSTRUCTION JOINTS OF THE SAME DIMENSIONS AS THOSE OF THE RCB OR ARCH SECTION MAY BE CARRIED THROUGH THE TRANSITION STRUCTURE AT THE CONTRACTOR'S OPTION. SEE SECTION B-B.
9. THE TRANSITION STRUCTURE SHALL BE CONSTRUCTED IN ACCORDANCE WITH THE STRUCTURAL NOTES APPLYING TO RCB OR ARCH STRUCTURES SHOWN ON THE PROJECT DRAWINGS.

TRANSITION STRUCTURE RCB TO PIPE

THIS PLAN ACCURATE FOR DRAINAGE WORK ONLY.

DRAINAGE DETAILS

NO SCALE

D-22

STATE OF CALIFORNIA - DEPARTMENT OF TRANSPORTATION
Caltrans DESIGN

FUNCTIONAL SUPERVISOR: MARK PERTILE
CALCULATED-DESIGNED BY: MOHAMMAD ABDRABOH
CHECKED BY: ALAN R. BISI
REVISED BY / DATE REVISED

LAST REVISION 03-29-11
DATE PLOTTED => 29-APR-2011
TIME PLOTTED => 17:37

Dist	COUNTY	ROUTE	POST MILES TOTAL PROJECT	SHEET No.	TOTAL SHEETS
08	Riv	91	15.6/21.6	296	2028

REGISTERED CIVIL ENGINEER 3-29-10 DATE

4-25-11
PLANS APPROVAL DATE

REGISTERED PROFESSIONAL ENGINEER ALAN R. BISI No. C62808 Exp. 6-30-12 CIVIL STATE OF CALIFORNIA

THE STATE OF CALIFORNIA OR ITS OFFICERS OR AGENTS SHALL NOT BE RESPONSIBLE FOR THE ACCURACY OR COMPLETENESS OF SCANNED COPIES OF THIS PLAN SHEET.

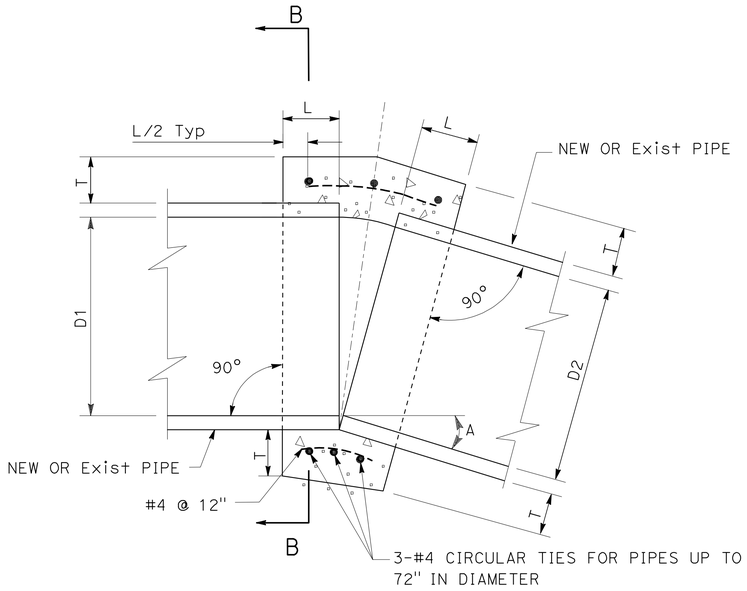

NOTES:

1. CONCRETE SHALL BE MINOR CONCRETE, MINOR STRUCTURE.
2. A CONCRETE COLLAR IS REQUIRED WHERE THE CHANGE IN GRADE EXCEEDS 10 PERCENT.
3. WHERE PIPES OF DIFFERENT DIAMETERS ARE JOINED WITH A CONCRETE COLLAR, 'L' AND 'T' SHALL BE THOSE OF THE LARGER PIPE.
4. FOR PIPE SIZE NOT LISTED USE NEXT SIZE LARGER SIZE.
5. OMIT REINFORCING ON PIPES 24" AND LESS IN DIAMETER AND ON ALL PIPES WHERE ANGLE 'A' IS LESS THAN 10°.
6. WHERE REINFORCING IS REQUIRED, THE DIAMETER OF THE CIRCULAR TIES SHALL BE D + (2 X WALL THICKNESS) + 8".
7. JOIN PIPES AT INVERTS WHERE THE SLOPE OF UPSTREAM PIPE IS LESS THAN THE SLOPE OF THE DOWNSTREAM PIPE, AND JOIN PIPES AT THE SOFFIT WITH A MITER JOINT WHERE THE SLOPE OF THE UPSTREAM PIPE IS GREATER THAN THE SLOPE OF THE DOWNSTREAM PIPE.

D	L	T
12	12	4
18	12	5
24	12	6
36	18	8
48	18	10
54	18	10
60	21	11
66	21	11
72	24	12

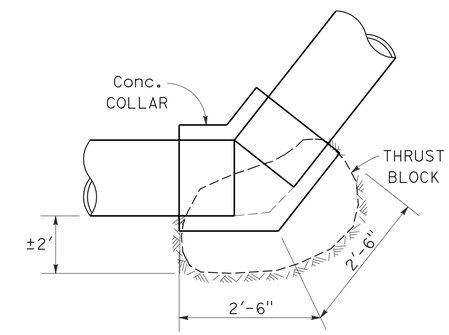

PIPE THRUST BLOCK

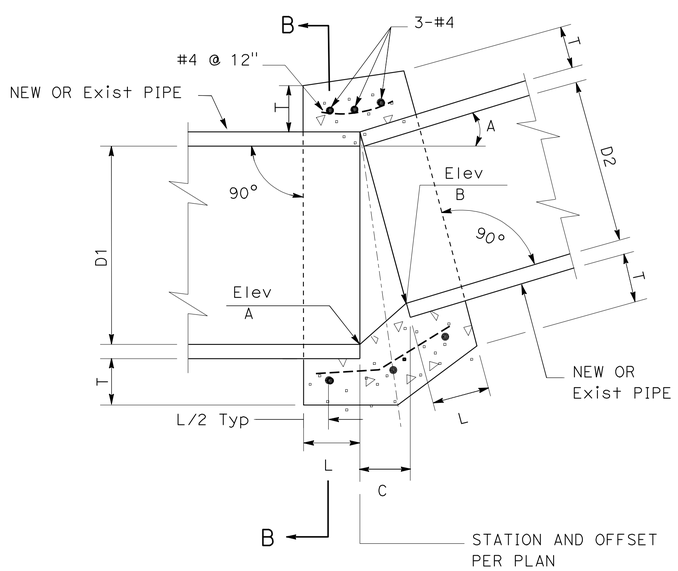

CONCRETE COLLAR (DIFFERENT PIPE DIAMETER)

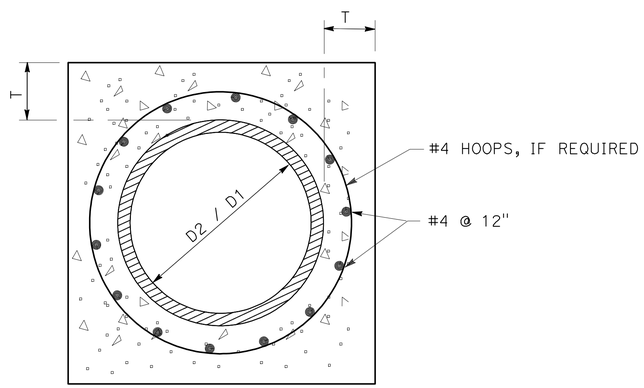

SECTION B-B

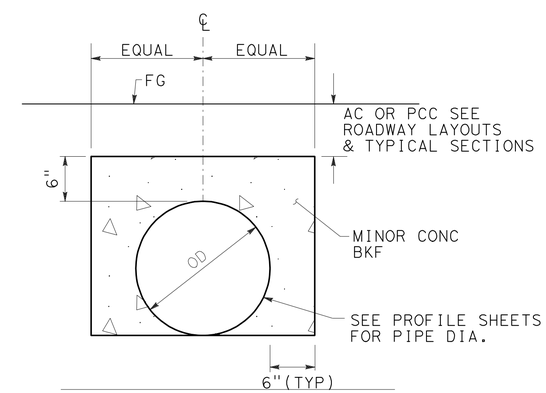

CONCRETE BACKFILL

DRAINAGE SYSTEMS APPLICABLE TO THIS SHEET						
3a	18e	20e	20f	25f	29a	43a
46p	47a	48a	50d	51a	51g	56a
56c	58a	60a	63a	64a	71c	76a
78a	81a	83a	87a	92a	94a	95a
96b	96i	97a	99a	104a	105a	105c
106a	107a	108c	115c	115d	119a	120a
122a	123e					

PIPE CONCRETE COLLAR

THIS PLAN ACCURATE FOR DRAINAGE WORK ONLY.

DRAINAGE DETAILS

NO SCALE

DD-23

STATE OF CALIFORNIA - DEPARTMENT OF TRANSPORTATION
Caltrans® DESIGN

FUNCTIONAL SUPERVISOR: MARK PERTILE
CALCULATED-DESIGNED BY: MOHAMMAD ABDRABOH
CHECKED BY: ALAN R. BISI
REVISED BY
DATE REVISED

LAST REVISION 03-29-11
DATE PLOTTED => 29-APR-2011
TIME PLOTTED => 17:37

Dist	COUNTY	ROUTE	POST MILES TOTAL PROJECT	SHEET No.	TOTAL SHEETS
08	Riv	91	15.6/21.6	297	2028

REGISTERED CIVIL ENGINEER 3-29-10 DATE

4-25-11
PLANS APPROVAL DATE

REGISTERED PROFESSIONAL ENGINEER ALAN R. BISI No. C62808 Exp. 6-30-12 CIVIL STATE OF CALIFORNIA

THE STATE OF CALIFORNIA OR ITS OFFICERS OR AGENTS SHALL NOT BE RESPONSIBLE FOR THE ACCURACY OR COMPLETENESS OF SCANNED COPIES OF THIS PLAN SHEET.

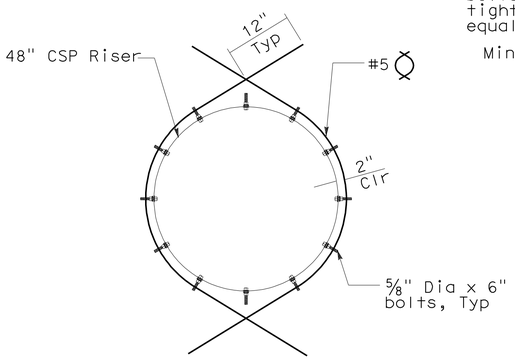

DETAIL 1

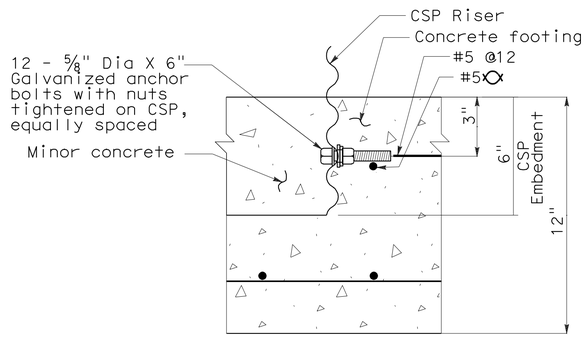

DETAIL 2

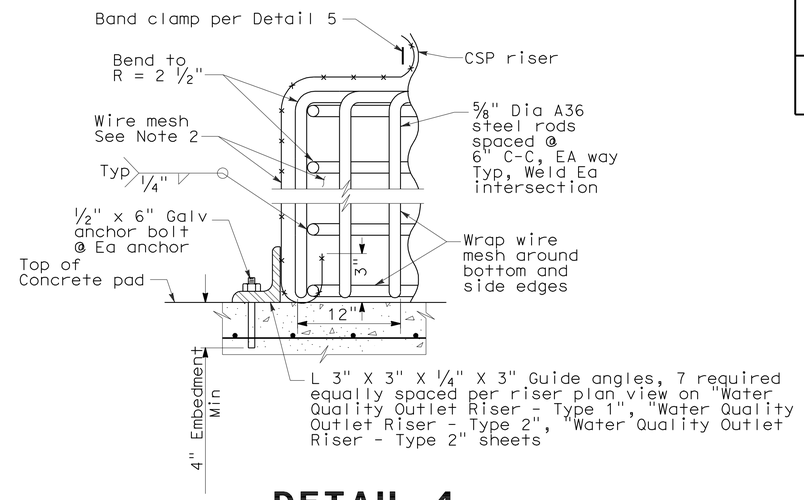

DETAIL 4
WIRE MESH SUPPORT FRAME

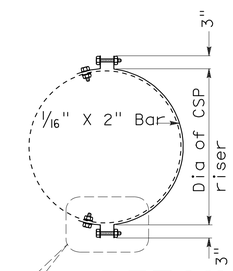

DETAIL 5
BAND CLAMP

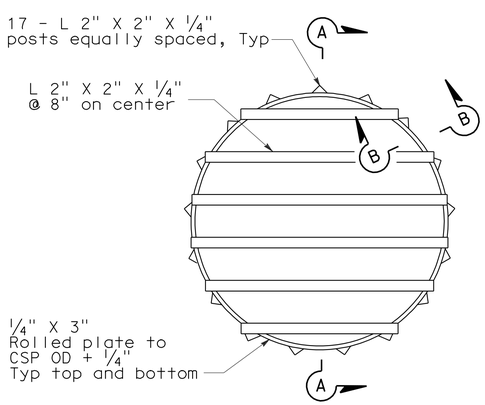

PLAN

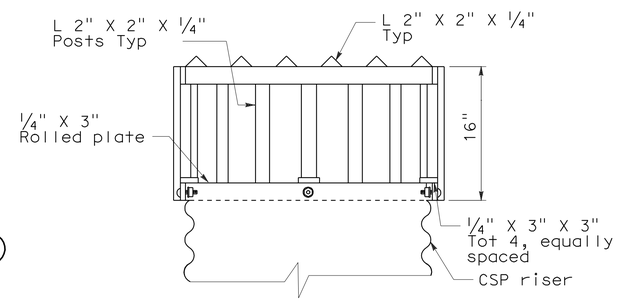

SECTION A-A

DETAIL 3
DEBRIS RACK CAGE

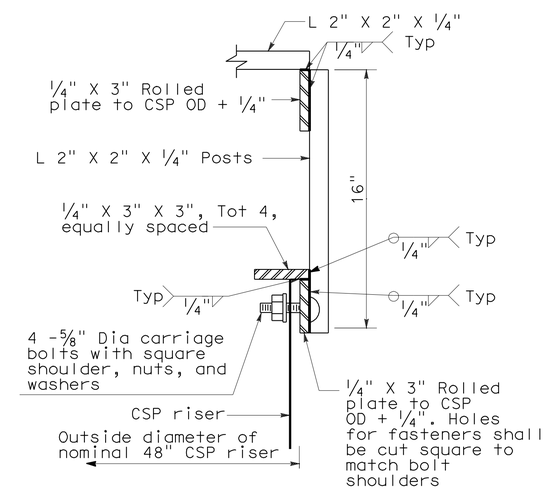

SECTION B-B

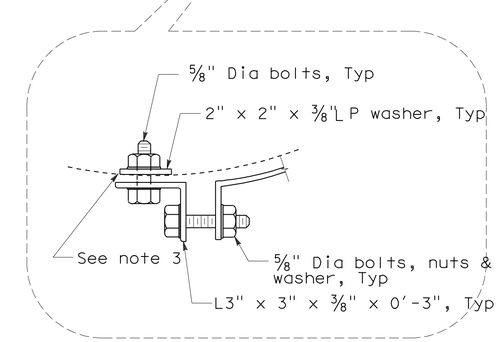

NOTES:

1. All hardware and fabrication materials shall be galvanized except as noted.
2. 1/4" X 1/4" (4 mesh per 1") 0.032" wire Dia, type 304 stainless steel.
3. Seal bolt holes and coat connection steel with asphalt mastic (ASTM A491). Trowel asphalt mastic a minimum of 1/2" thick on and around connection steel. Use mastic to fill corrugations behind washer plates.

WATER QUALITY OUTLET RISER
MISCELLANEOUS DETAILS

THIS PLAN ACCURATE FOR DRAINAGE WORK ONLY.

DRAINAGE DETAILS
NO SCALE
DD-24

STATE OF CALIFORNIA - DEPARTMENT OF TRANSPORTATION
Caltrans® DESIGN
FUNCTIONAL SUPERVISOR MARK PERTILE
CALCULATED-DESIGNED BY MOHAMMAD ABDRABOH
CHECKED BY ALAN R. BISI
REVISED BY
DATE REVISED

LAST REVISION 03-29-11
DATE PLOTTED => 29-APR-2011
TIME PLOTTED => 17:37

Dist	COUNTY	ROUTE	POST MILES TOTAL PROJECT	SHEET No.	TOTAL SHEETS
08	Riv	91	15.6/21.6	298	2028

REGISTERED CIVIL ENGINEER 3-29-10 DATE

4-25-11
PLANS APPROVAL DATE

REGISTERED PROFESSIONAL ENGINEER ALAN R. BISI No. C62808 Exp. 6-30-12 CIVIL STATE OF CALIFORNIA

THE STATE OF CALIFORNIA OR ITS OFFICERS OR AGENTS SHALL NOT BE RESPONSIBLE FOR THE ACCURACY OR COMPLETENESS OF SCANNED COPIES OF THIS PLAN SHEET.

RECTANGULAR AND TRAPEZOIDAL DITCH DIMENSIONS						
SYSTEM	UNIT	W (ft)	D (ft)	Z	B (ft)	REMARKS
7	a	4.0	1.0	1	2.0	SEE NOTE 1
9	a	14.0	1.5	4	2.0	Bioswale/Earthen-Check Dimention
9	b	6.0	1.0	2	2.0	Concrete---Check Dimension
11	b	6.0	1.0	2.0	2.0	
19	a	4.0	1.0	1	2.0	
43	d	7.0	2.0	1.5	1.0	
49	b	4.0	var	-	4.0	Rectangular
52	b	8.0	1.5	2	2.0	Concrete
55	h	5.0	1.5	1	2.0	
62	b	3.0	1.5	1	1.0	
69	a	7.0	1.0	3	1.0	Removed
80	b	3.0	1.0	1	1.0	
82	b	8.0	1.5	2	2.0	Concrete
111	e	13.0	1.5	4	1.0	Bioswale
125	a	8.0	1.0	2	4.0	

TRIANGULAR DITCH DIMENSIONS					
SYSTEM	UNIT	W(ft)	D(ft)	Z	REMARKS
18	a	2.0	1.0	1	N/A, AC
73	a	6.0	1.5	2	Concrete
110	d	3.0	0.75	2	Concrete

NOTE:

1. #4 LONGITUDINAL BARS MAY BE OMITTED FOR CHANNEL DEPTHS OF 12" AND LESS.
2. ALTERNATIVE LONGITUDINAL CUTOFF WALL MAY BE USED WHERE CONSTRAINED BY RIGHT-OF-WAY OR STRUCTURE WITH ENGINEER'S APPROVAL. CUTOFF WALL TRANSITIONS SHALL BE CONTIGUOUS AND GRADUAL WITH NO OPEN GAPS BETWEEN CONFIGURATIONS.
3. LONGITUDINAL CUTOFF WALL DEPTH, X, SHALL BE D/4 OR 8" MINIMUM, WHICHEVER IS GREATER.

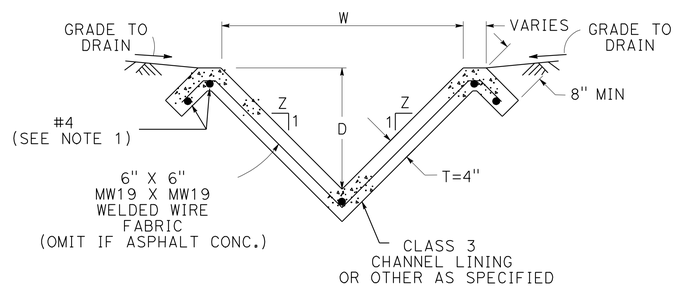

TRIANGULAR

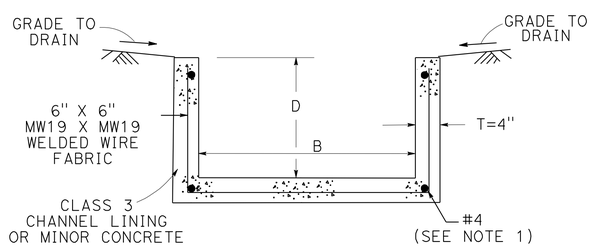

RECTANGULAR

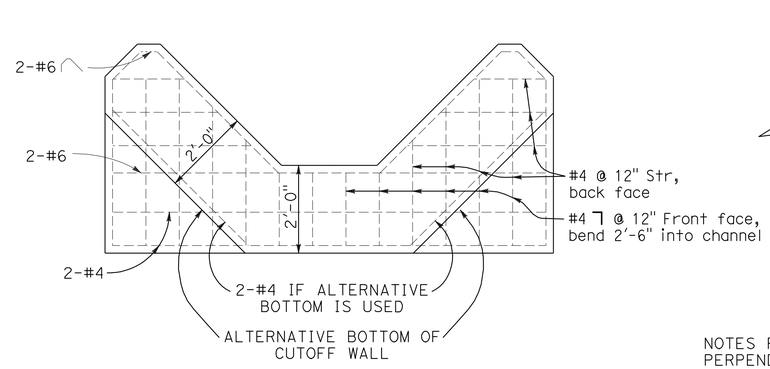

PERPENDICULAR CUTOFF WALL

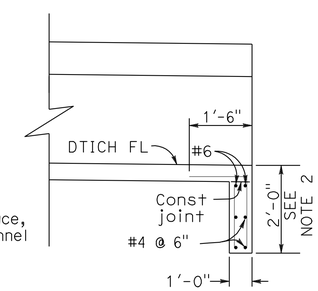

NOTES FOR PERPENDICULAR CUTOFF WALL:

1. TRAPEZOIDAL CROSS SECTION SHOWN, OTHER CROSS SECTIONS SIMILAR.
2. CUTOFF WALL LENGTH 2'-0" UNLESS OTHERWISE SPECIFIED ON PLAN.
3. CONCRETE FOR CUTOFF WALL SHALL BE OF SAME CLASS AS DITCH.

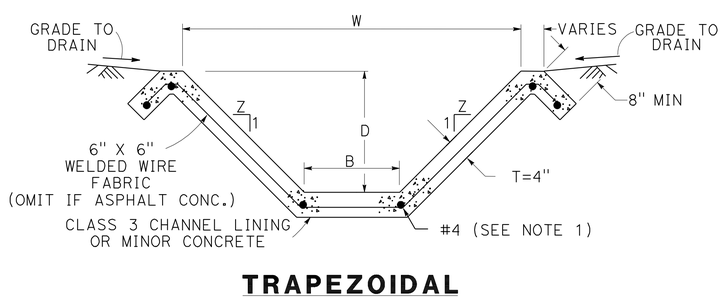

TRAPEZOIDAL

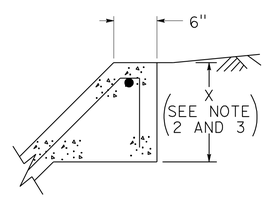

LONGITUDINAL CUTOFF WALL ALTERNATIVE

DITCH DRAINAGE DETAIL

DRAINAGE DETAILS

NO SCALE

DD-25

THIS PLAN ACCURATE FOR DRAINAGE WORK ONLY.

STATE OF CALIFORNIA - DEPARTMENT OF TRANSPORTATION
Caltrans® DESIGN
FUNCTIONAL SUPERVISOR MARK PERTILE
CALCULATED-DESIGNED BY MOHAMMAD ABDRABOH
CHECKED BY ALAN R. BISI
REVISED BY
DATE REVISED

LAST REVISION 03-29-11
DATE PLOTTED => 29-APR-2011
TIME PLOTTED => 17:37

Dist	COUNTY	ROUTE	POST MILES TOTAL PROJECT	SHEET No.	TOTAL SHEETS
08	Riv	91	15.6/21.6	299	2028

REGISTERED CIVIL ENGINEER 3-29-10 DATE

4-25-11
PLANS APPROVAL DATE

REGISTERED PROFESSIONAL ENGINEER ALAN R. BISI No. C62808 Exp. 6-30-12 CIVIL STATE OF CALIFORNIA

THE STATE OF CALIFORNIA OR ITS OFFICERS OR AGENTS SHALL NOT BE RESPONSIBLE FOR THE ACCURACY OR COMPLETENESS OF SCANNED COPIES OF THIS PLAN SHEET.

SPAN			2′
HEIGHT			1′
Maximum Earth Cover			10′
Conc	Roof	T_1	7"
	Walls	T_2	6"
	Invert	T_3	6"
Reinf	Spacing		7"
	"a"	Size Bar	#6
	"e"	Size Bar	#4
Quan-tities	Concrete	CF/LF	3.7
	Reinforcement	LB/LF	24

RCB NOTES:

1. Quantities are approximate and for design purposes only.
2. It is permissible to eliminate the 180° hooks on every other bar.
3. Provide paving notch when top is exposed and when pavement is portland cement concrete, and adjust quantities.
4. For design and details not shown, see Standard Plan D82.
5. For exposed top, provide #4 @ 12" each way.
6. Roof thickness of RCB may be increased to meet FS Elevation per direction of Engineer.

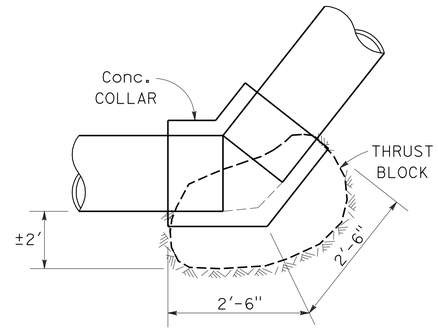

PIPE THRUST BLOCK

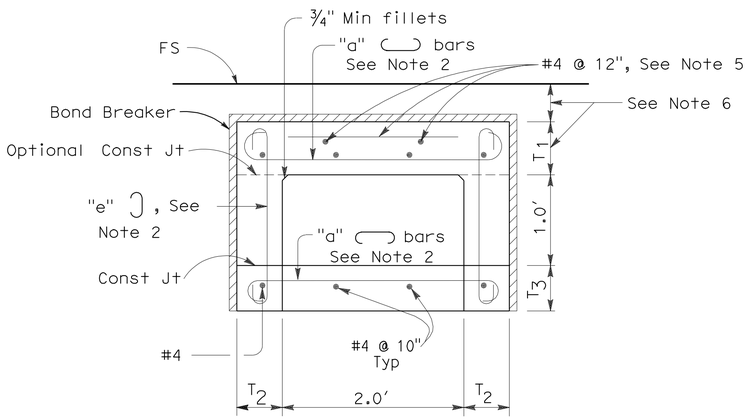

2' X 1' RCB TYPICAL SECTION

DRAINAGE SYSTEMS APPLICABLE TO THIS SHEET		
29d	93c	93e
93g	93i	96b
96i	101b	102b
102d	102f	102h
103b	103d	107e

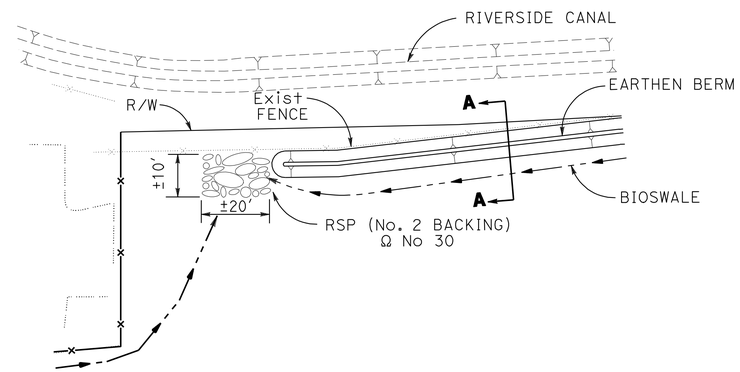

BERM END TREATMENT

Lt Sta 244+60 "GE1"

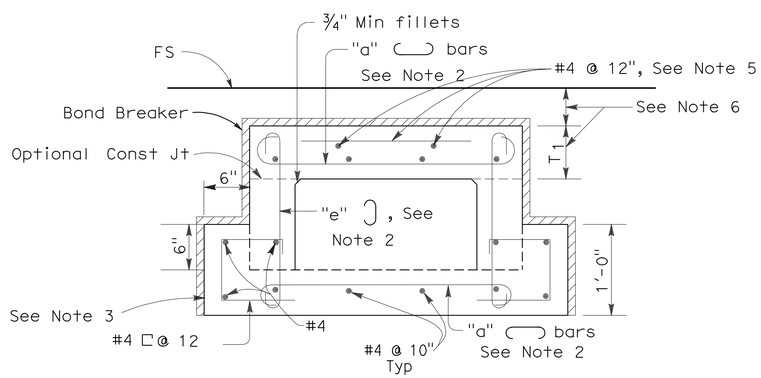

2' X 1' RCB WITH PAVING NOTCH TYPICAL SECTION

(FOR USE IN PCC SECTION)

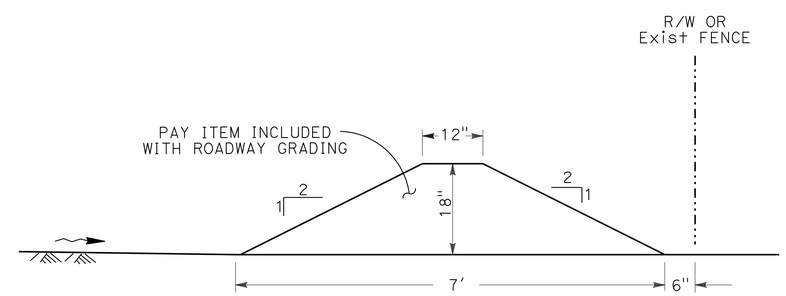

SECTION A-A EARTHEN BERM

Lt Sta 244+70 TO 251+20 "GE1"

DRAINAGE DETAILS

NO SCALE

DD-26

THIS PLAN ACCURATE FOR DRAINAGE WORK ONLY.

STATE OF CALIFORNIA - DEPARTMENT OF TRANSPORTATION
Caltrans
DESIGN

FUNCTIONAL SUPERVISOR: MARK PERTILE
CALCULATED-DESIGNED BY: MOHAMMAD ABDRABOH
CHECKED BY: ALAN R. BISI
REVISED BY
DATE REVISED

LAST REVISION 03-29-11
DATE PLOTTED => 29-APR-2011
TIME PLOTTED => 17:37

Dist	COUNTY	ROUTE	POST MILES TOTAL PROJECT	SHEET No.	TOTAL SHEETS
08	Riv	91	15.6/21.6	300	2028

REGISTERED CIVIL ENGINEER 3-29-10 DATE

4-25-11
PLANS APPROVAL DATE

REGISTERED PROFESSIONAL ENGINEER ALAN R. BISI No. C62808 Exp. 6-30-12 CIVIL STATE OF CALIFORNIA

THE STATE OF CALIFORNIA OR ITS OFFICERS OR AGENTS SHALL NOT BE RESPONSIBLE FOR THE ACCURACY OR COMPLETENESS OF SCANNED COPIES OF THIS PLAN SHEET.

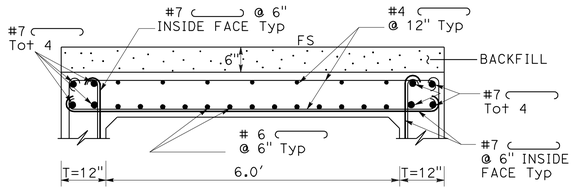

SECTION C-C
NOT TO SCALE

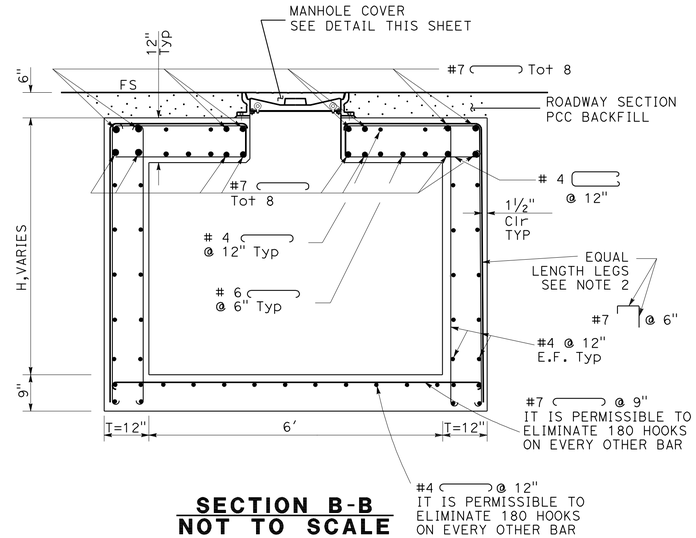

SECTION B-B
NOT TO SCALE

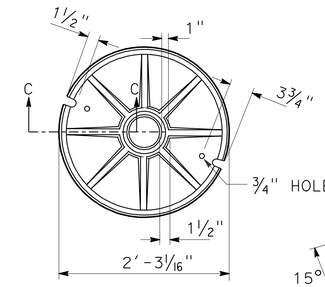

COVER-BOTTOM
262 LBS

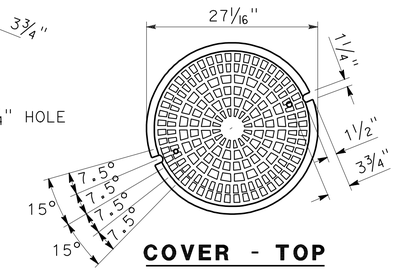

COVER - TOP
262 LBS

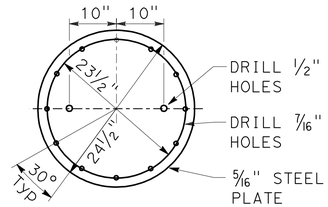

PRESSURE PLATE
42 LBS

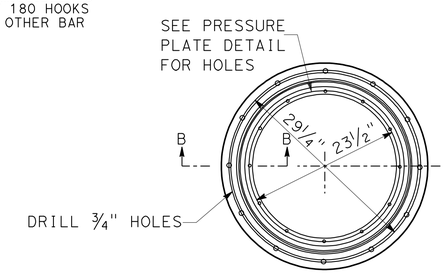

FRAME-PLAN
195 LBS

NOTES

1. MANHOLE FRAME AND COVER SHALL BE MADE OF GRAY CAST IRON CONFORMING TO SECTION 75 OF STANDARD SPECIFICATIONS
2. ALL PARTS OF THE MANHOLE FRAME AND COVER EXCEPT MACHINED SURFACES SHALL BE COATED WITH ASPHALTUM PAINT.
3. MANHOLE FRAME AND COVER SHALL BE TESTED FOR ACCURACY OF FIT AND SHALL BE MARKED IN SETS BEFORE DELIVERY. THE COVER SHALL FIT THE FRAME SNUGLY BUT NOT TIGHTLY.
4. COVERS SHALL BEAR THE LETTER "D"
5. WEIGHTS OF FRAME, COVER AND PRESSURE PLATE SHALL NOT VARY MORE THAN TWO PERCENT FROM THOSE GIVEN HEREON.
6. USE STANDARD MANHOLE SHAFT UNLESS OTHERWISE SHOWN ON DRAINAGE PLAN.

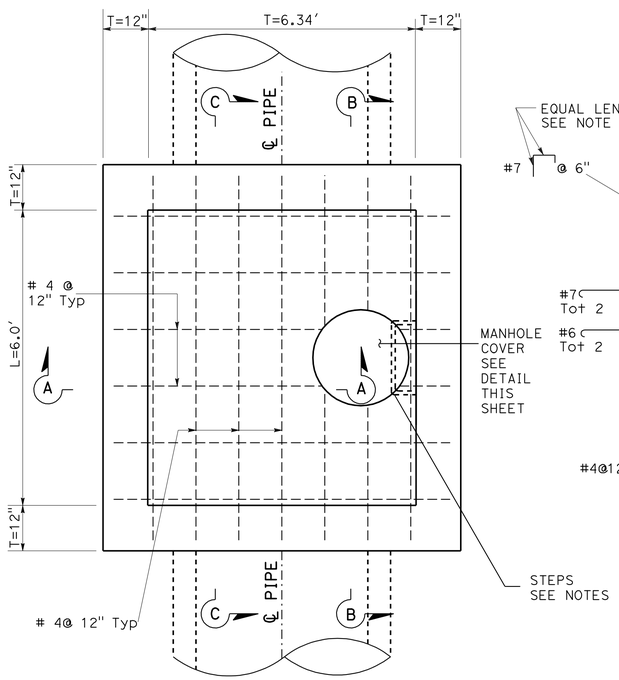

PRESSURE MANHOLE
NOT TO SCALE

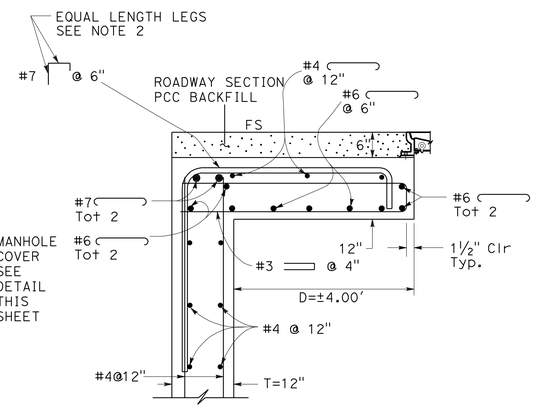

SECTION A-A
NOT TO SCALE

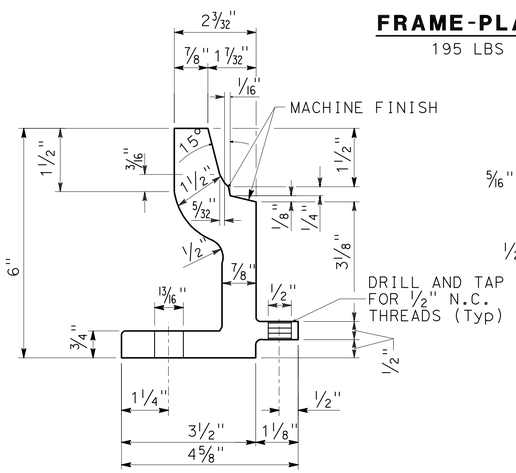

SECTION B-B

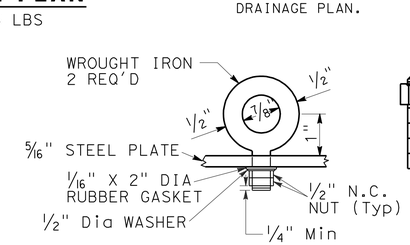

DETAIL Y

DETAIL Z

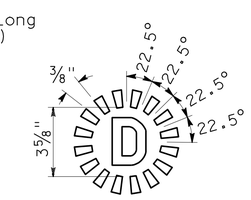

LETTER DETAIL

DRAINAGE SYSTEMS APPLICABLE TO THIS SHEET		
96e	107e	

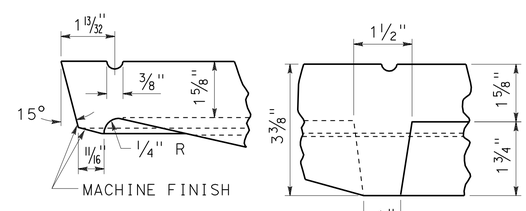

SECTION C-C

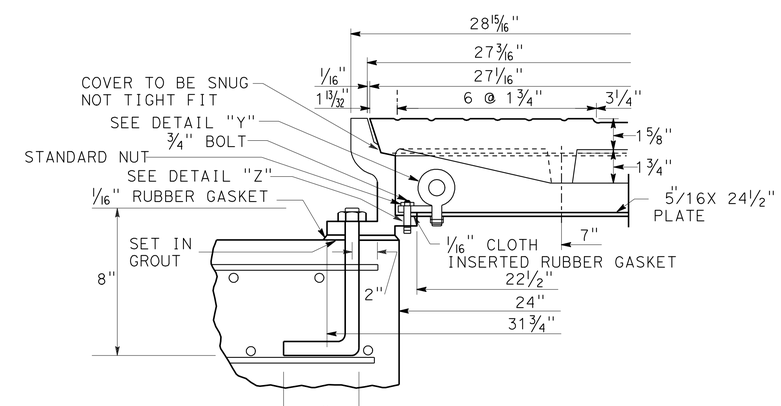

MANHOLE FRAME & COVER DETAILS
FOR PRESSURE MANHOLE

NOTES:
1. SEE NOTES 1, 5, 7, 9, 10, 13, 14, AND 16 ON STANDARD PLAN D74B.
2. BAR MAY BE ROTATED AS NECESSARY TO CLEAR OPENING.

THIS PLAN ACCURATE FOR DRAINAGE WORK ONLY.

ALL DIMENSIONS ARE INCHES UNLESS OTHERWISE SHOWN

DRAINAGE DETAIL

SCALE: NONE

DD-27

STATE OF CALIFORNIA - DEPARTMENT OF TRANSPORTATION
DESIGN
FUNCTIONAL SUPERVISOR: MARK PERTILE
CALCULATED-DESIGNED BY: MOHAMMAD ABDRABOH
CHECKED BY: ALAN R. BISI
REVISED BY
DATE REVISED

LAST REVISION 03-29-11
DATE PLOTTED => 29-APR-2011
TIME PLOTTED => 18:45