DIST.	COUNTY	ROUTE	MILE POST TOTAL PROJECT	SHEET NO.	TOTAL SHEETS
08	Riv	91	15.6/21.6	1701	2028

REGISTERED ENGINEER - CIVIL 11-30-10

4-25-11
PLANS APPROVAL DATE

The State of California or its officers or agents shall not be responsible for the accuracy or completeness of electronic copies of this plan sheet.

REGISTERED PROFESSIONAL ENGINEER HUAN VU No. 60696 Exp. 12-31-10 CIVIL STATE OF CALIFORNIA

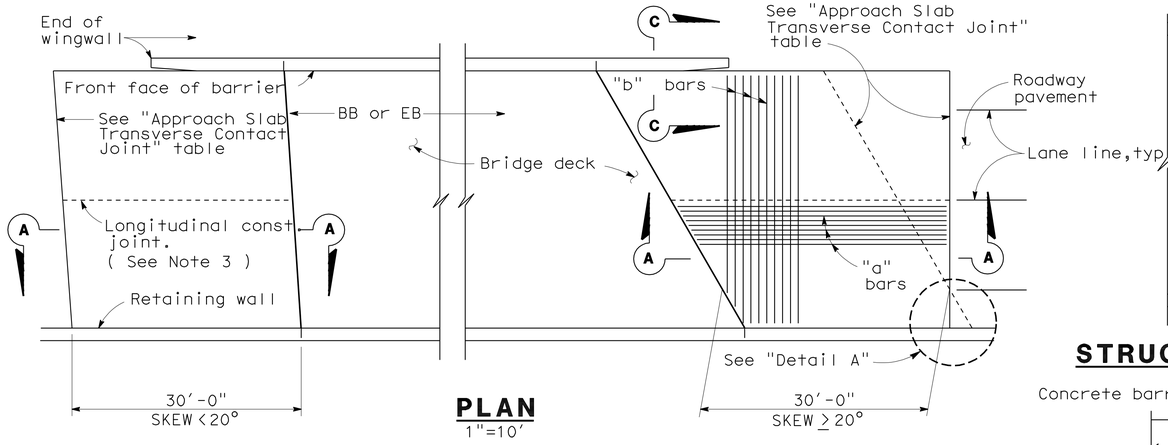

PLAN
1"=10'

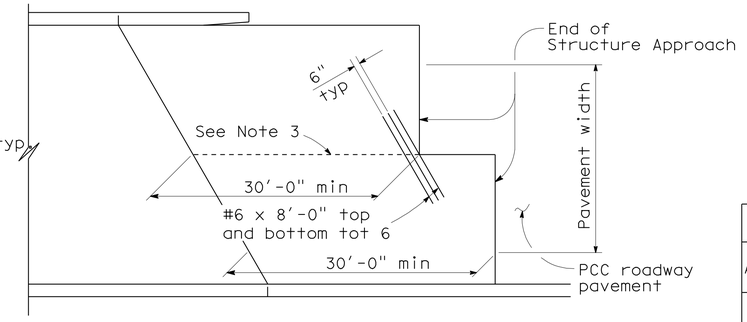

STRUCTURE APPROACH - END STAGGER DETAIL
No Scale

APPROACH SLAB TRANSVERSE CONTACT JOINT		
APPROACH SKEW	WITH AC ROADWAY PAVEMENT	WITH PCC ROADWAY PAVEMENT
< 20°	Parallel to face of paving notch	Parallel to face of paving notch
20° - 45°	Parallel to face of P N use (Detail A)	Stagger lines 24' to 36' apart.
> 45°	Parallel to face of P N use (Detail A)	Stagger at each lane line.

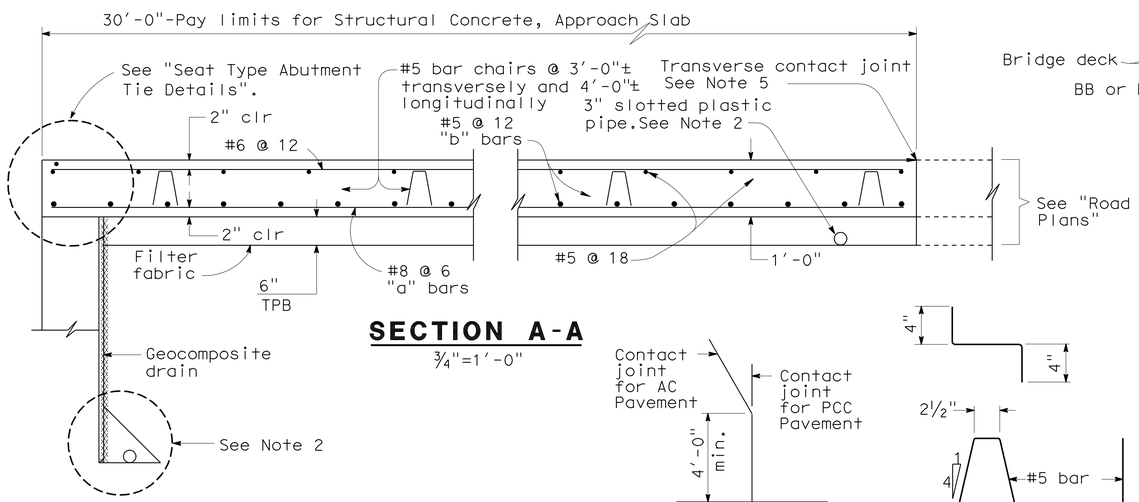

SECTION A-A
¾"=1'-0"

DETAIL A
No Scale

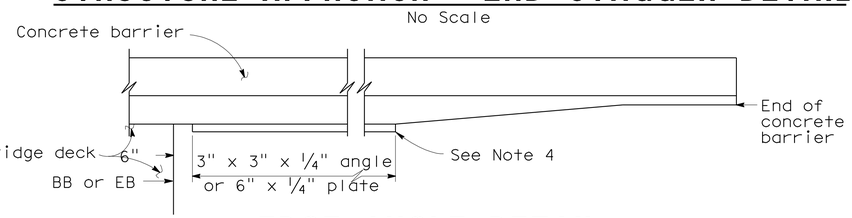

EDGE ANGLE DETAIL
½"=1'-0"

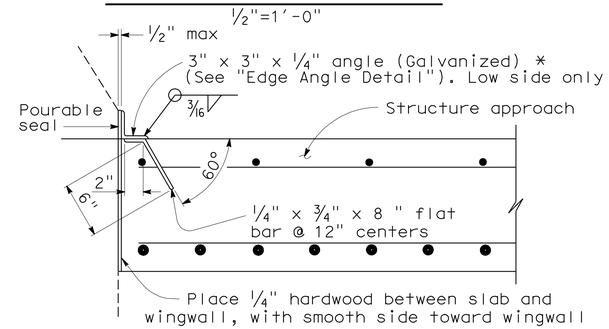

*(TO BE USED WITH TYPE 25 OR TYPE 27 CONCRETE BARRIER)

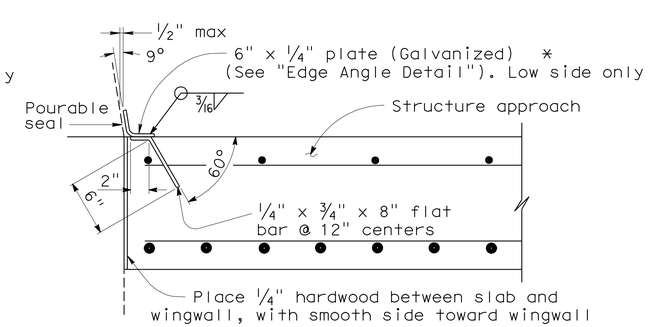

*(TO BE USED WITH TYPE 732 OR TYPE 736 CONCRETE BARRIER)

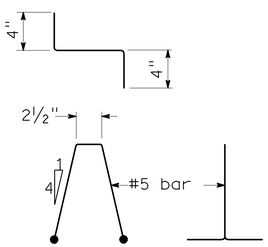

BAR CHAIR DETAIL
1½"=1'-0"

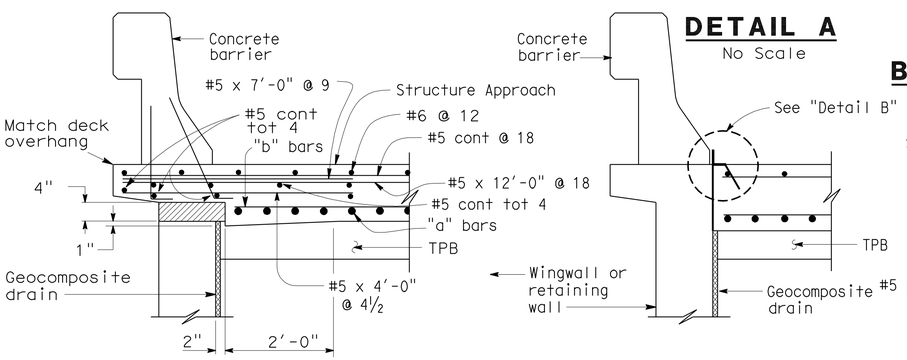

TYPE E-1 TYPE E-2

SECTION C-C
¾"=1'-0"

(Type E-1 to be used,unless otherwise shown on plans)

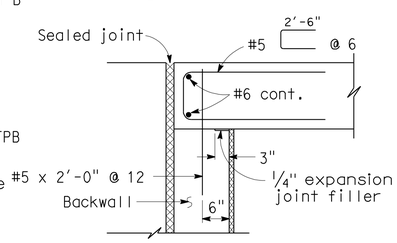

MR ≤ 2"

DETAIL B
1½"=1'-0"

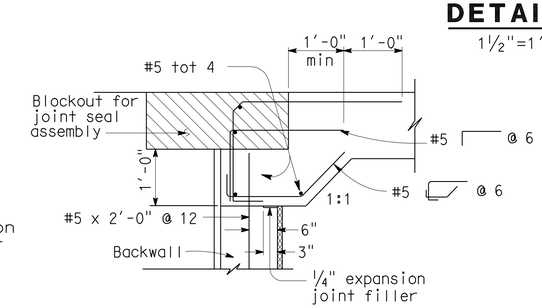

MR > 2"

SEAT TYPE ABUTMENT TIE DETAILS (SEE NOTE 1)
¾"=1'-0"

NOTES:

1. For details not shown,see Structure Plans. For MR ≤ 2",adjust bar reinforcement to clear a sawcut for sealed joint,when required.
2. For drainage details,see "Structure Approach Drainage Details" sheet.
3. Longitudinal construction joints,when permitted by the Engineer, shall be located on lane lines.
4. End angle or plate at beginning of barrier transition, end of wingwall or end of structure approach as applicable.
5. For transverse contact joint with new PCC paving, refer to Standard Plan P10.
6. At the contractor's option, approach slab transverse reinforcement may be placed parallel to paving notch. Spacing of transverse reinforcement is measured along ℄ roadway.

Remove all polystyrene.

STANDARD DRAWING				
RELEASE DATE 3/14/05	DESIGN	BY M.TRAFFALIS	CHECKED E.THORKILDSEN	RELEASED BY
FILE NO. xs3-120e	DETAILS	BY R.YEE	CHECKED E.THORKILDSEN	
	SUBMITTED	BY M.HA	DRAWING DATE 4/98	OFFICE CHIEF

STATE OF CALIFORNIA DEPARTMENT OF TRANSPORTATION

DIVISION OF ENGINEERING SERVICES

BRIDGE NO. 56-0330

MILE POST 17.82

ARLINGTON AVE UC (WIDEN)

STRUCTURE APPROACH TYPE N(30S)

DS OSD 2147A (ENGLISH) (REV. X/XX/XX)

ORIGINAL SCALE IN INCHES FOR REDUCED PLANS 0 1 2 3

CU 08
EA 448401

DISREGARD PRINTS BEARING EARLIER REVISION DATES 2-26-10

REVISION DATES (PRELIMINARY STAGE ONLY)

SHEET 18 OF 24

USERNAME => trcarol

560330ssapn18.dgn

DATE PLOTTED => 30-APR-2011 TIME PLOTTED => 12:56

DIST	COUNTY	ROUTE	POST MILES TOTAL PROJECT	SHEET No	TOTAL SHEETS
08	Riv	91	15.6/21.6	1702	2028

REGISTERED CIVIL ENGINEER 11-30-10 DATE

4-25-11
PLANS APPROVAL DATE

The State of California or its officers or agents shall not be responsible for the accuracy or completeness of electronic copies of this plan sheet.

REGISTERED PROFESSIONAL ENGINEER HUAN VU No. 60696 Exp. 12-31-10 CIVIL STATE OF CALIFORNIA

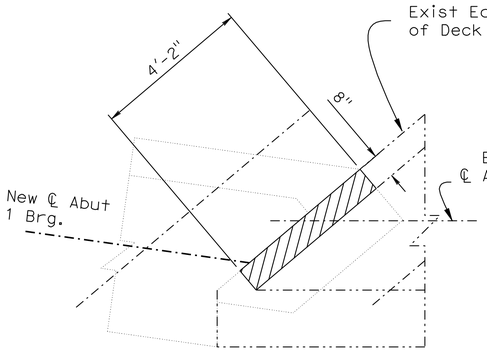

EXISTING ABUT 1 RIGHT

½" = 1'-0"

EXISTING ABUT 2 LEFT SIMILAR

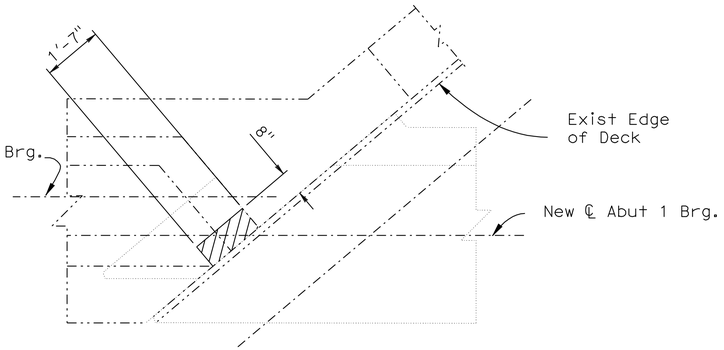

EXISTING ABUT 1 LEFT

½" = 1'-0"

EXISTING ABUT 2 RIGHT SIMILAR

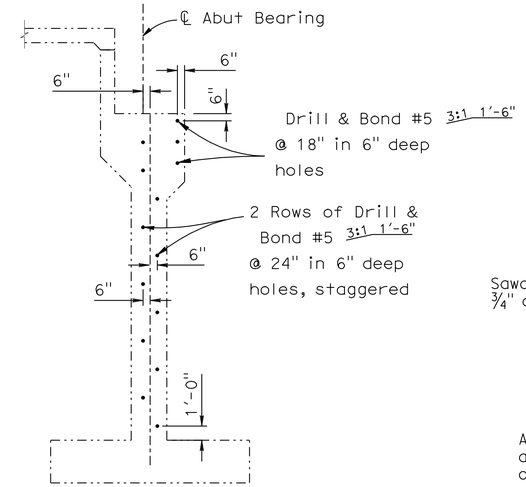

DRILL & BOND DOWEL ARRANGEMENT

3/16" = 1'-0"

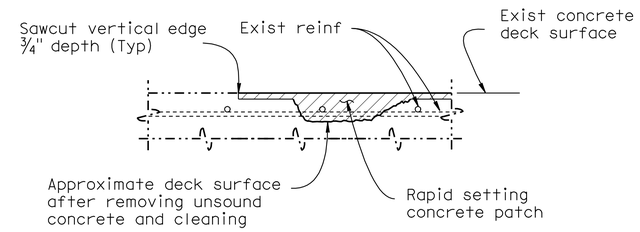

DECK REPAIR DETAIL

No Scale

Notes:

1. Approximate damaged area is 1.0% of treated area
2. Location will be determined by the engineer
3. Reinforcement may be encountered during deck concrete removal and is to remain undamaged.

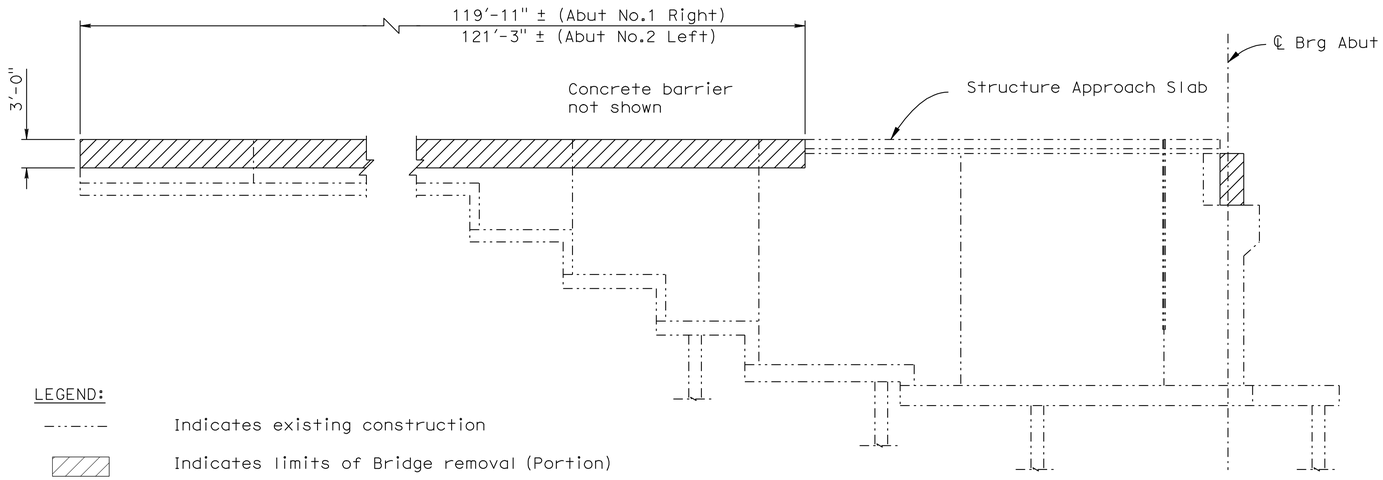

LEGEND:

Indicates existing construction

Indicates limits of Bridge removal (Portion)

LIMITS OF REMOVAL EXISTING ABUT NO.1 RIGHT & ABUT NO.2 LEFT

⅛" = 1'-0"

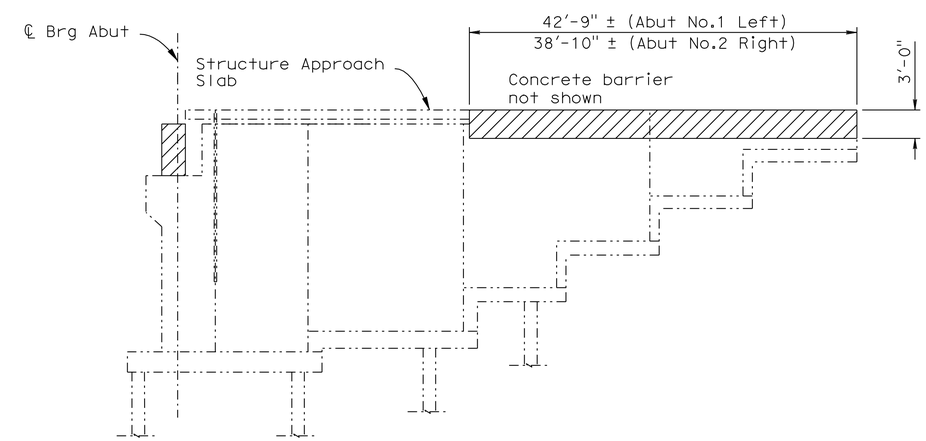

LIMITS OF REMOVAL EXISTING ABUT NO.1 LEFT & ABUT NO.2 RIGHT

⅛" = 1'-0"

NOTE:
THE CONTRACTOR SHALL VERIFY ALL CONTROLLING FIELD DIMENSIONS BEFORE ORDERING OR FABRICATING ANY MATERIAL.

	BY	CHECKED
DESIGN	H. Vu	F. Chen
DETAILS	D. Wooten	F. Chen
QUANTITIES	J. Szabo	A. McPhee

STATE OF CALIFORNIA
DEPARTMENT OF TRANSPORTATION

DIVISION OF ENGINEERING SERVICES
STRUCTURE DESIGN
DESIGN BRANCH 10

BRIDGE NO. 56-0330
POST MILE 17.82

ARLINGTON AVE UC (WIDEN)
MISCELLANEOUS DETAILS

STRUCTURES DESIGN DETAIL SHEET (ENGLISH) (REV. 10/25/05)

ORIGINAL SCALE IN INCHES FOR REDUCED PLANS 0 1 2 3

CU 08
EA 448401

DISREGARD PRINTS BEARING EARLIER REVISION DATES 1-18-10

REVISION DATES

SHEET 19 OF 24

FILE => 560330umiscdt19.dgn

USERNAME => trcarol DATE PLOTTED => 30-APR-2011 TIME PLOTTED => 12:56

Dist	COUNTY	ROUTE	POST MILES TOTAL PROJECT	SHEET No.	TOTAL SHEETS
08	Riv	91	15.6/21.6	1703	2028

11-30-10
LICENSED LANDSCAPE ARCHITECT

4-25-11
PLANS APPROVAL DATE

LICENSED LANDSCAPE ARCHITECT
Matthew Harry Hall
No. 2011
Signature
10/31/2011
Renewal Date
Date
STATE OF CALIFORNIA

THE STATE OF CALIFORNIA OR ITS OFFICERS OR AGENTS SHALL NOT BE RESPONSIBLE FOR THE ACCURACY OR COMPLETENESS OF SCANNED COPIES OF THIS PLAN SHEET.

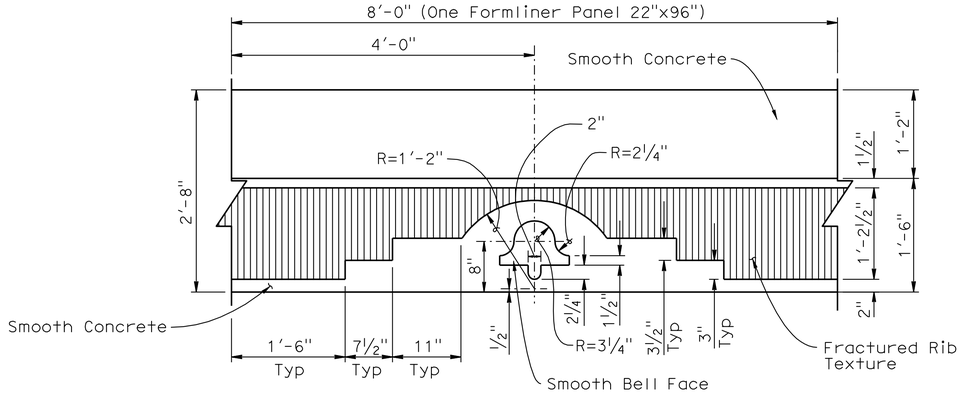

DETAIL "A"

1"=1'-0"

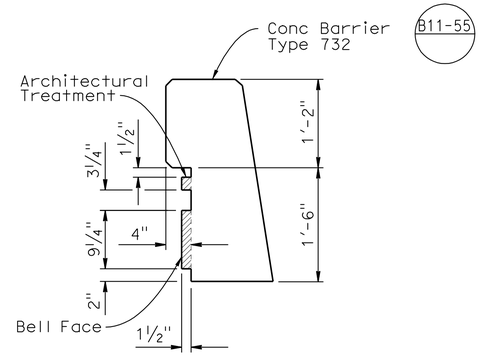

SECTION AT CENTER OF PANEL-BELL

1"=1'-0"

CONCRETE BARRIER TYPE 732 (MOD)

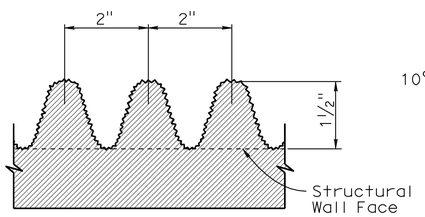

FRACTURED RIB TEXTURE (TYP)

No Scale

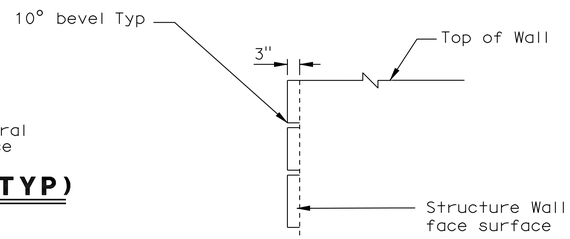

CORNER QUOINING SECTION

No Scale

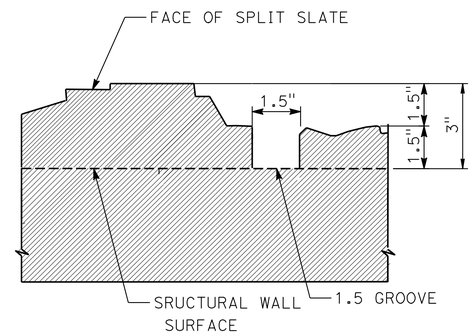

TYPICAL SPLIT SLATE TEXTURE

NO SCALE

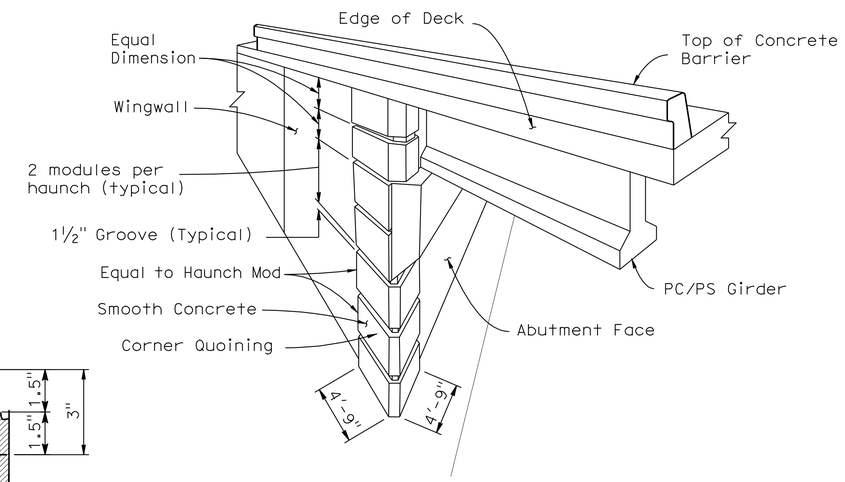

PERSPECTIVE

NO SCALE

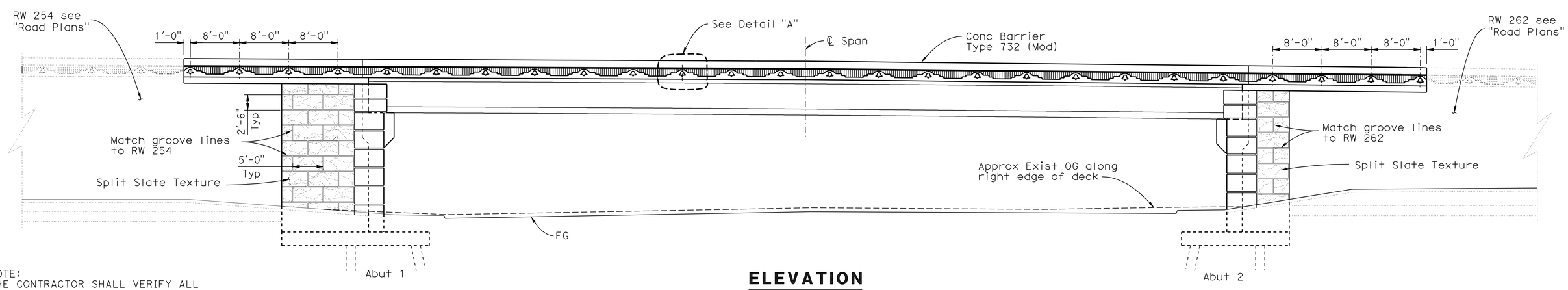

ELEVATION

⅛"=1'-0"

Note: Right edge of deck shown, Left edge of deck similar

NOTE:
THE CONTRACTOR SHALL VERIFY ALL CONTROLLING FIELD DIMENSIONS BEFORE ORDERING OR FABRICATING ANY MATERIAL.

DESIGN	BY B. Fleming/M. Hall	CHECKED M. Bishop	
DETAILS	BY G. Hallstrom	CHECKED M. Bishop	
QUANTITIES	BY J. Szabo	CHECKED A. McPhee	

STATE OF CALIFORNIA
DEPARTMENT OF TRANSPORTATION

DIVISION OF ENGINEERING SERVICES
STRUCTURE DESIGN
DESIGN BRANCH 10

BRIDGE NO. 56-0330
POST MILE 17.82

ARLINGTON AVE UC (WIDEN)
ARCHITECTURAL DETAILS

STRUCTURES DESIGN DETAIL SHEET (ENGLISH) (REV. 10/25/05)

ORIGINAL SCALE IN INCHES FOR REDUCED PLANS 0 1 2 3

CU 08
EA 448401

DISREGARD PRINTS BEARING EARLIER REVISION DATES

REVISION DATES: 5-18-10 8-06-10 9-20-10

SHEET 20 OF 24

FILE => 560330umiscdt20.dgn

USERNAME => trcarol DATE PLOTTED => 30-APR-2011 TIME PLOTTED => 12:56

DIST	COUNTY	ROUTE	POST MILES TOTAL PROJECT	SHEET No	TOTAL SHEETS
08	Riv	91	15.6/21.6	1704	2028

REGISTERED CIVIL ENGINEER 7-14-10

4-25-11
PLANS APPROVAL DATE

The State of California or its officers or agents shall not be responsible for the accuracy or completeness of electronic copies of this plan sheet.

REGISTERED PROFESSIONAL ENGINEER Yeo Yoon No. 73532 Exp. 12-31-10 CIVIL STATE OF CALIFORNIA

This LOTB sheet was prepared in accordance with the Caltrans Soil & Rock Logging; Classification; & Presentation Manual (June 2007).

BENCH MARK

PNO 505 Set PK/CT washer
N 2289886.788
E 6216028.014
Elev 854.01′ NGVD 29

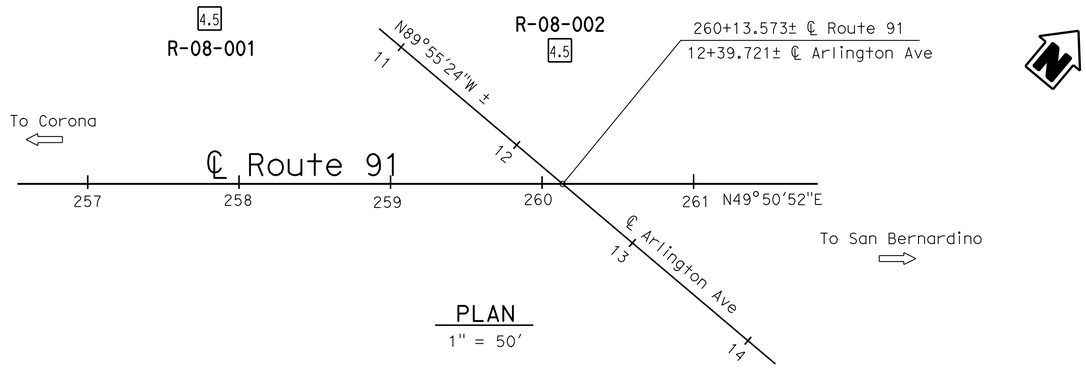

PLAN

1" = 50′

NOTES:

1. Shown are the actual blow counts recorded in the field. Apparent densities of soils shown on the LOTB sheets are based on the corrected SPT N-values for hammer efficiency.
2. A groundwater table measurement was not made at Boring R-08-001 since the bore hole was backfilled immediately after completion of drilling.

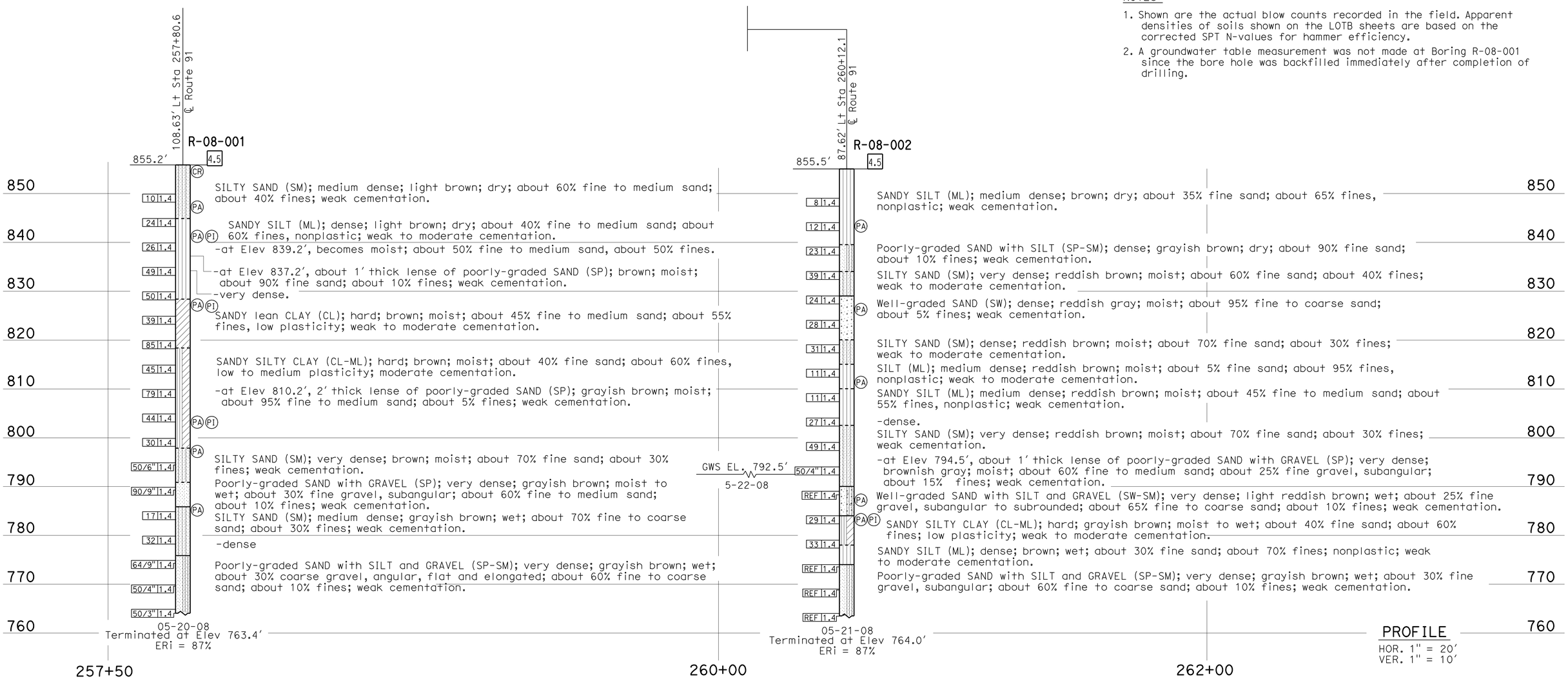

PROFILE

HOR. 1" = 20′
VER. 1" = 10′

ENGINEERING SERVICES	GEOTECHNICAL SERVICES	STATE OF CALIFORNIA DEPARTMENT OF TRANSPORTATION	DIVISION OF ENGINEERING SERVICES STRUCTURE DESIGN	BRIDGE NO. 56-0330	ARLINGTON AVE UC (WIDEN)
FUNCTIONAL SUPERVISOR	DRAWN BY: I.G-Remmen; 12/08	FIELD INVESTIGATION BY:	DESIGN BRANCH	POST MILES 17.8	LOG OF TEST BORINGS 1 OF 4
NAME: M. DeSalvatore	CHECKED BY: J. Klamecki	Y. Yoon			

OGS CIVIL LOG OF TEST BORINGS SHEET

ORIGINAL SCALE IN INCHES FOR REDUCED PLANS 0 1 2 3

CU 08
EA 448401

DISREGARD PRINTS BEARING EARLIER REVISION DATES

REVISION DATES: 01-26-09 03-15-10 04-05-10 05-13-10

SHEET 21 OF 24

FILE => 560330zltb21.dgn

USERNAME => trcarol DATE PLOTTED => 30-APR-2011 TIME PLOTTED => 12:56

DIST	COUNTY	ROUTE	POST MILES TOTAL PROJECT	SHEET No	TOTAL SHEETS
08	Riv	91	15.6/21.6	1705	2028

REGISTERED CIVIL ENGINEER 7-14-10

4-25-11
PLANS APPROVAL DATE

REGISTERED PROFESSIONAL ENGINEER Yeo Yoon No. 73532 Exp. 12-31-10 CIVIL STATE OF CALIFORNIA

The State of California or its officers or agents shall not be responsible for the accuracy or completeness of electronic copies of this plan sheet.

REFERENCE: CALTRANS SOIL & ROCK LOGGING, CLASSIFICATION, AND PRESENTATION MANUAL (JUNE 2007)

CEMENTATION

Description	Criteria
Weak	Crumbles or breaks with handling or little finger pressure.
Moderate	Crumbles or breaks with considerable finger pressure.
Strong	Will not crumble or break with finger pressure.

CONSISTENCY OF COHESIVE SOILS

Description	Unconfined Compressive Strength (tsf)	Pocket Penetrometer Measurement (tsf)	Torvane Measurement (tsf)	Field Approximation
Very Soft	< 0.25	< 0.25	< 0.12	Easily penetrated several inches by fist
Soft	0.25 to 0.50	0.25 to 0.50	0.12 to 0.25	Easily penetrated several inches by thumb
Medium Stiff	0.50 to 1.0	0.50 to 1.0	0.25 to 0.50	Penetrated several inches by thumb with moderate effort
Stiff	1 to 2	1 to 2	0.50 to 1.0	Readily indented by thumb but penetrated only with great effort
Very Stiff	2 to 4	2 to 4	1.0 to 2.0	Readily indented by thumbnail
Hard	> 4.0	> 4.0	> 2.0	Indented by thumbnail with difficulty

BOREHOLE IDENTIFICATION

Symbol	Hole Type	Description
Size	A	Auger Boring
Size	R P	Rotary drilled boring Rotary percussion boring (air)
Size	R	Rotary drilled diamond core
Size	HD HA	Hand driven (1-inch soil tube) Hand Auger
●	D	Dynamic Cone Penetration Boring
▲	CPT	Cone Penetration Test (ASTM D 5778-95)
⬚	O	Other

Note: Size in inches.

PLASTICITY OF FINE-GRAINED SOILS

Description	Criteria
Nonplastic	A 1/8-inch thread cannot be rolled at any water content.
Low	The thread can barely be rolled and the lump cannot be formed when drier than the plastic limit.
Medium	The thread is easy to roll and not much time is required to reach the plastic limit. The thread cannot be rerolled after reaching the plastic limit. The lump crumbles when drier than the plastic limit.
High	It takes considerable time rolling and kneading to reach the plastic limit. The thread can be rerolled several times after reaching the plastic limit. The lump can be formed without crumbling when drier than the plastic limit.

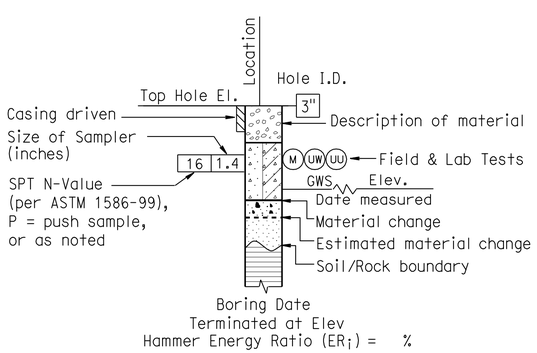

ROTARY BORING

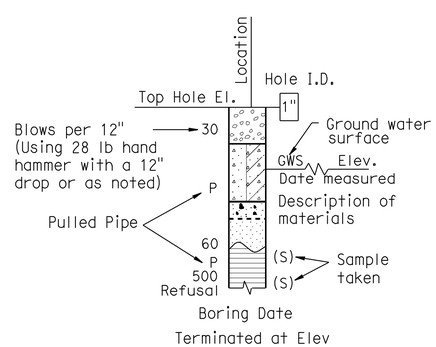

HAND BORING

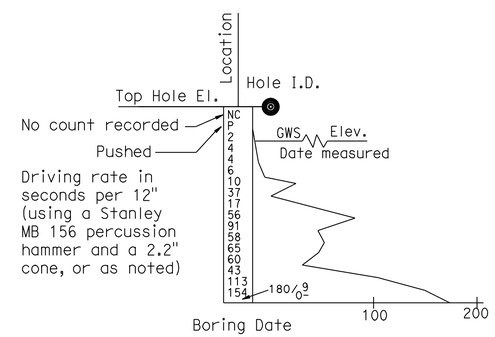

DYNAMIC CONE PENETRATION BORING

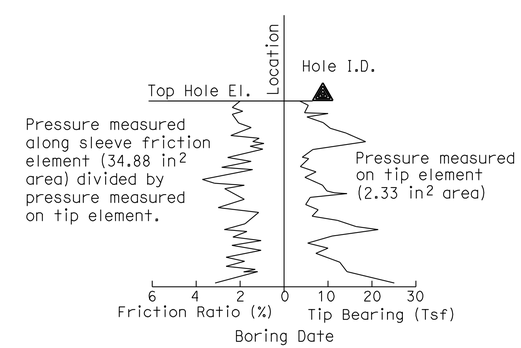

CONE PENETRATION TEST (CPT) SOUNDING

ENGINEERING SERVICES	GEOTECHNICAL SERVICES	STATE OF CALIFORNIA DEPARTMENT OF TRANSPORTATION	DIVISION OF ENGINEERING SERVICES STRUCTURE DESIGN DESIGN BRANCH	BRIDGE NO. 56-0330 POST MILE 17.8	ARLINGTON AVE UC (WIDEN) LOG OF TEST BORINGS 2 OF 4
	PREPARED BY: I.G-Remmen				

GS LOTB SOIL LEGEND

ORIGINAL SCALE IN INCHES FOR REDUCED PLANS 0 1 2 3

CU 08
EA 448401

DISREGARD PRINTS BEARING EARLIER REVISION DATES

REVISION DATES

SHEET 22 OF 24

FILE => 560330zltb22.dgn

USERNAME => ttrcarol DATE PLOTTED => 30-APR-2011 TIME PLOTTED => 12:57

REFERENCE: CALTRANS SOIL & ROCK LOGGING, CLASSIFICATION, AND PRESENTATION MANUAL (JUNE 2007)

DIST	COUNTY	ROUTE	POST MILES TOTAL PROJECT	SHEET No	TOTAL SHEETS
08	Riv	91	15.6/21.6	1706	2028

REGISTERED CIVIL ENGINEER 7-14-10

4-25-11
PLANS APPROVAL DATE

REGISTERED PROFESSIONAL ENGINEER Yeo Yoon No. 73532 Exp. 12-31-10 CIVIL STATE OF CALIFORNIA

The State of California or its officers or agents shall not be responsible for the accuracy or completeness of electronic copies of this plan sheet.

GROUP SYMBOLS AND NAMES

Graphic/Symbol	Group Names	Graphic/Symbol	Group Names
GW	Well-graded GRAVEL Well-graded GRAVEL with SAND	CL	Lean CLAY Lean CLAY with SAND Lean CLAY with GRAVEL SANDY lean CLAY SANDY lean CLAY with GRAVEL GRAVELLY lean CLAY GRAVELLY lean CLAY with SAND
GP	Poorly graded GRAVEL Poorly graded GRAVEL with SAND		
GW-GM	Well-graded GRAVEL with SILT Well-graded GRAVEL with SILT and SAND	CL-ML	SILTY CLAY SILTY CLAY with SAND SILTY CLAY with GRAVEL SANDY SILTY CLAY SANDY SILTY CLAY with GRAVEL GRAVELLY SILTY CLAY GRAVELLY SILTY CLAY with SAND
GW-GC	Well-graded GRAVEL with CLAY (or SILTY CLAY) Well-graded GRAVEL with CLAY and SAND (or SILTY CLAY and SAND)		
GP-GM	Poorly graded GRAVEL with SILT Poorly graded GRAVEL with SILT and SAND	ML	SILT SILT with SAND SILT with GRAVEL SANDY SILT SANDY SILT with GRAVEL GRAVELLY SILT GRAVELLY SILT with SAND
GP-GC	Poorly graded GRAVEL with CLAY (or SILTY CLAY) Poorly graded GRAVEL with CLAY and SAND (or SILTY CLAY and SAND)		
GM	SILTY GRAVEL SILTY GRAVEL with SAND	OL	ORGANIC lean CLAY ORGANIC lean CLAY with SAND ORGANIC lean CLAY with GRAVEL SANDY ORGANIC lean CLAY SANDY ORGANIC lean CLAY with GRAVEL GRAVELLY ORGANIC lean CLAY GRAVELLY ORGANIC lean CLAY with SAND
GC	CLAYEY GRAVEL CLAYEY GRAVEL with SAND		
GC-GM	SILTY, CLAYEY GRAVEL SILTY, CLAYEY GRAVEL with SAND	OL	ORGANIC SILT ORGANIC SILT with SAND ORGANIC SILT with GRAVEL SANDY ORGANIC SILT SANDY ORGANIC SILT with GRAVEL GRAVELLY ORGANIC SILT GRAVELLY ORGANIC SILT with SAND
SW	Well-graded SAND Well-graded SAND with GRAVEL		
SP	Poorly graded SAND Poorly graded SAND with GRAVEL	CH	Fat CLAY Fat CLAY with SAND Fat CLAY with GRAVEL SANDY fat CLAY SANDY fat CLAY with GRAVEL GRAVELLY fat CLAY GRAVELLY fat CLAY with SAND
SW-SM	Well-graded SAND with SILT Well-graded SAND with SILT and GRAVEL		
SW-SC	Well-graded SAND with CLAY (or SILTY CLAY) Well-graded SAND with CLAY and GRAVEL (or SILTY CLAY and GRAVEL)	MH	Elastic SILT Elastic SILT with SAND Elastic SILT with GRAVEL SANDY elastic SILT SANDY elastic SILT with GRAVEL GRAVELLY elastic SILT GRAVELLY elastic SILT with SAND
SP-SM	Poorly graded SAND with SILT Poorly graded SAND with SILT and GRAVEL		
SP-SC	Poorly graded SAND with CLAY (or SILTY CLAY) Poorly graded SAND with CLAY and GRAVEL (or SILTY CLAY and GRAVEL)	OH	ORGANIC fat CLAY ORGANIC fat CLAY with SAND ORGANIC fat CLAY with GRAVEL SANDY ORGANIC fat CLAY SANDY ORGANIC fat CLAY with GRAVEL GRAVELLY ORGANIC fat CLAY GRAVELLY ORGANIC fat CLAY with SAND
SM	SILTY SAND SILTY SAND with GRAVEL		
SC	CLAYEY SAND CLAYEY SAND with GRAVEL	OH	ORGANIC elastic SILT ORGANIC elastic SILT with SAND ORGANIC elastic SILT with GRAVEL SANDY ORGANIC elastic SILT SANDY ORGANIC elastic SILT with GRAVEL GRAVELLY ORGANIC elastic SILT GRAVELLY ORGANIC elastic SILT with SAND
SC-SM	SILTY, CLAYEY SAND SILTY, CLAYEY SAND with GRAVEL		
PT	PEAT	OL/OH	ORGANIC SOIL ORGANIC SOIL with SAND ORGANIC SOIL with GRAVEL SANDY ORGANIC SOIL SANDY ORGANIC SOIL with GRAVEL GRAVELLY ORGANIC SOIL GRAVELLY ORGANIC SOIL with SAND
	COBBLES COBBLES and BOULDERS BOULDERS		

FIELD AND LABORATORY TESTING

- (C) Consolidation (ASTM D 2435)
- (CL) Collapse Potential (ASTM D 5333)
- (CP) Compaction Curve (CTM 216)
- (CR) Corrosivity Testing (CTM 643, CTM 422, CTM 417)
- (CU) Consolidated Undrained Triaxial (ASTM D 4767)
- (DS) Direct Shear (ASTM D 3080)
- (EI) Expansion Index (ASTM D 4829)
- (M) Moisture Content (ASTM D 2216)
- (OC) Organic Content-% (ASTM D 2974)
- (P) Permeability (CTM 220)
- (PA) Particle Size Analysis (ASTM D 422)
- (PI) Plasticity Index (AASHTO T 90) Liquid Limit (AASHTO T 89)
- (PL) Point Load Index (ASTM D 5731)
- (PM) Pressure Meter
- (PP) Pocket Penetrometer
- (R) R-Value (CTM 301)
- (SE) Sand Equivalent (CTM 217)
- (SG) Specific Gravity (AASHTO T 100)
- (SL) Shrinkage Limit (ASTM D 427)
- (SW) Swell Potential (ASTM D 4546)
- (TV) Pocket Torvane
- (UC) Unconfined Compression-Soil (ASTM D 2166) Unconfined Compression-Rock (ASTM D 2938)
- (UU) Unconsolidated Undrained Triaxial (ASTM D 2850)
- (UW) Unit Weight (ASTM D 4767)
- (VS) Vane Shear (AASHTO T 223)

APPARENT DENSITY OF COHESIONLESS SOILS

Description	SPT N_{60} (Blows / 12 inches)
Very loose	0 - 4
Loose	5 - 10
Medium Dense	11 - 30
Dense	31 - 50
Very Dense	> 50

MOISTURE

Description	Criteria
Dry	Absence of moisture, dusty, dry to the touch
Moist	Damp but no visible water
Wet	Visible free water, usually soil is below water table

PERCENT OR PROPORTION OF SOILS

Description	Criteria
Trace	Particles are present but estimated to be less than 5%
Few	5 to 10%
Little	15 to 25%
Some	30 to 45%
Mostly	50 to 100%

PARTICLE SIZE

Description		Size
Boulder		> 12"
Cobble		3" to 12"
Gravel	Coarse	3/4" to 3"
	Fine	No. 4 to 3/4"
Sand	Coarse	No. 10 to No. 4
	Medium	No. 40 to No. 10
	Fine	No. 200 to No. 40

ENGINEERING SERVICES	GEOTECHNICAL SERVICES	STATE OF CALIFORNIA DEPARTMENT OF TRANSPORTATION	DIVISION OF ENGINEERING SERVICES STRUCTURE DESIGN DESIGN BRANCH	BRIDGE NO. 56-0330 POST MILE 17.8	ARLINGTON AVE UC (WIDEN) LOG OF TEST BORINGS 3 OF 4
	PREPARED BY: I.G-Remmen		CU 08 EA 448401	DISREGARD PRINTS BEARING EARLIER REVISION DATES	SHEET 23 OF 24

GS LOTB SOIL LEGEND

ORIGINAL SCALE IN INCHES FOR REDUCED PLANS 0 1 2 3

FILE => 560330zltb23.dgn

USERNAME => tricarol DATE PLOTTED => 30-APR-2011 TIME PLOTTED => 12:57

FED. ROAD DIV. NO.	STATE	PROJ. NO.	FISCAL YEAR	SHEET NO.	TOTAL SHEETS
7	CAL.	(-0263(7))		76	136

DIST.	COUNTY	ROUTE	SECTION	SHEET NO.	TOTAL SHEETS
VIII	Riv	~~42~~ 91	Riv	15	15

DATE APPROVED February 13, 1956

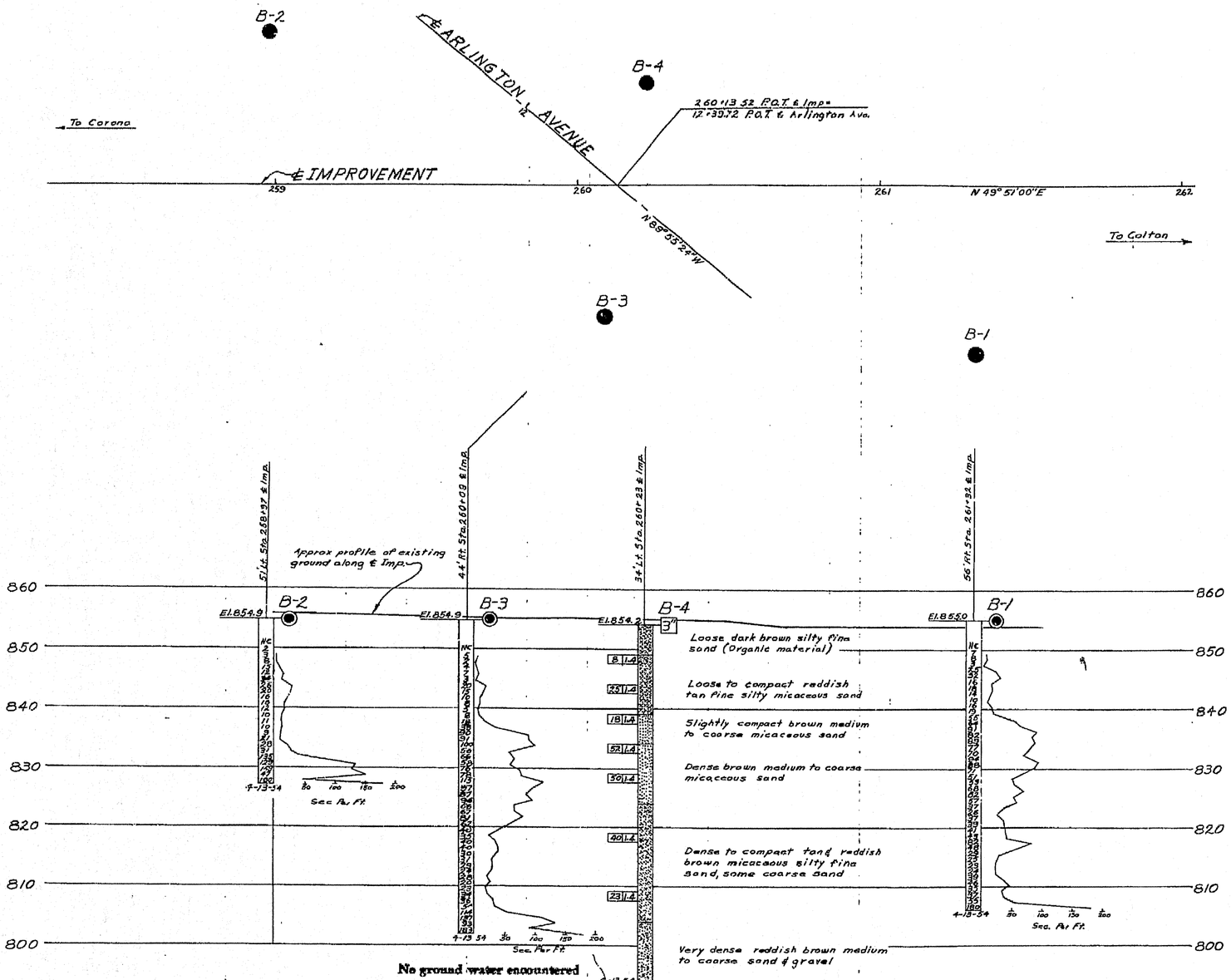

DIVISION OF ENGINEERING SERVICES - GEOTECHNICAL SERVICES					
As-Built Log of Test Borings sheet is considered an informational document only. As such, the State of California registration seal with signature, license number and registration certificate expiration date confirm that this is a true and accurate copy of the original document. It does not attest to the accuracy or validity of the information contained in the original document. This drawing is available and presented only for the convenience of any bidder, contractor or other interested party.					
DIST.	COUNTY	ROUTE	POST MILE-TOTAL PROJECT	Sheet No.	Total Sheets
08	Riv	91	15.6/21.6	1707	2028
REGISTERED CIVIL ENGINEER			DATE 9/22/10		
SUPPLEMENTAL SHEET					
ARLINGTON AVE UC (WIDEN)					
LOG OF TEST BORINGS					
NOTE: A COPY OF THIS LOG OF TEST BORINGS IS AVAILABLE AT OFFICE OF STRUCTURE MAINTENANCE AND INVESTIGATIONS, SACRAMENTO, CALIFORNIA		CU: 08 EA: 448401	BRIDGE No. 56-0330		
To Accompany Plans Dated 4-25-11				Sheet 24	of 24

REGISTERED PROFESSIONAL ENGINEER
Mark DeSalvatore
No. C039499
Exp. 12-31-11
CIVIL
STATE OF CALIFORNIA

AS BUILT PLANS
Contract No. 57-8VC2
Date Completed
Document No. 80000802

Test Boring By Bridge Dept.
B.M. Arl.-San Diego '53
Spkd nail in lead in P.C.C. curb 205' Lt. 258+16 P.O.T. ℄ Imp.
El. 852.99

~~B.M. Arl.-San Diego '53~~
~~Spkd. nail in lead in P.C.C. Curb Handwall, 268' Rt. 263+00 P.O.T. ℄ Imp.~~
~~El. 851.50~~

AS BUILT
CORRECTIONS BY L. Reese
DATE 6-25-57

BRIDGE DEPARTMENT

CLASSIFICATION OF MATERIAL BASED ON STANDARD GRADE SIZE LIMITS

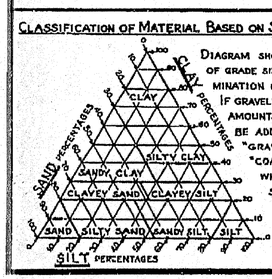

DIAGRAM SHOWING THE BASIS FOR ESTIMATES OF GRADE SIZE DISTRIBUTION USED IN DETERMINATION OF CLASS NAMES.
IF GRAVEL IS PRESENT IN APPRECIABLE AMOUNTS THE TERM "GRAVELLY" MAY BE ADDED TO THE CLASS NAME, VIZ. "GRAVELLY SAND." THE TERMS "COARSE", "MEDIUM" AND "FINE" WHEN USED TO DESCRIBE SAND, SILT AND GRAVEL REFER TO STANDARD GRADE SIZE LIMITS.

LEGEND OF EARTH MATERIALS

- Gravel
- Sand
- Silt
- Clay
- Sandy Clay or Clayey Sand
- Silty Clay or Clayey Silt
- Peat and/or Organic Matter
- Fill Material
- Igneous Rock
- Sedimentary Rock
- Metamorphic Rock
- Sandy Silt or Silty Sand

LEGEND OF BORING OPERATIONS

- Plan of any boring
- Penetrometer
- 2 1/4" Cone Penetrometer
- Sampler boring (dry)
- Rotary boring (wet)
- Auger boring (dry)
- Jet boring
- Core boring
- Test pit

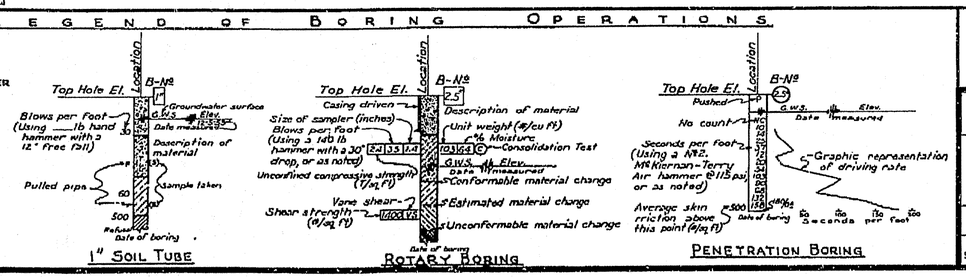

NOTES

The contractor's attention is directed to Section 2, Article (c) of the Standard Specifications and to the Special Provisions accompanying this set of plans.
Classification of earth material as shown on this sheet is based upon field inspection and is not to be construed to imply mechanical analysis.

STATE OF CALIFORNIA
DEPARTMENT OF PUBLIC WORKS
DIVISION OF HIGHWAYS

ARLINGTON AVENUE U.C.

LOG OF TEST BORINGS

SCALE	BRIDGE	FILE	DRAWING
Vert. 1"=10' Horz. 1"=20'	56-330		C-3857-15

PREL. DRAWING NO. P-3857 37

560330z1tb24.tif

DIST	COUNTY	ROUTE	POST MILES TOTAL PROJECT	SHEET No	TOTAL SHEETS
08	Riv	91	15.6/21.6	1708	2028

REGISTERED CIVIL ENGINEER 11-30-10 DATE

4-25-11
PLANS APPROVAL DATE

REGISTERED PROFESSIONAL ENGINEER HUAN VU No. 60696 Exp. 12-31-10 CIVIL STATE OF CALIFORNIA

The State of California or its officers or agents shall not be responsible for the accuracy or completeness of electronic copies of this plan sheet.

LEGEND:
- Indicates existing structure
- Indicates new construction
- Indicates direction of traffic flow
- Indicates point of minimum vert clr
- Indicates limits of bridge removal
- Indicates Limits of Clean and Treat Bridge Deck with Methacrylate

Curve Data
℄ Route 91
R = 3000.007
Δ = 32°38'07"
L = 1708.776
T = 878.261

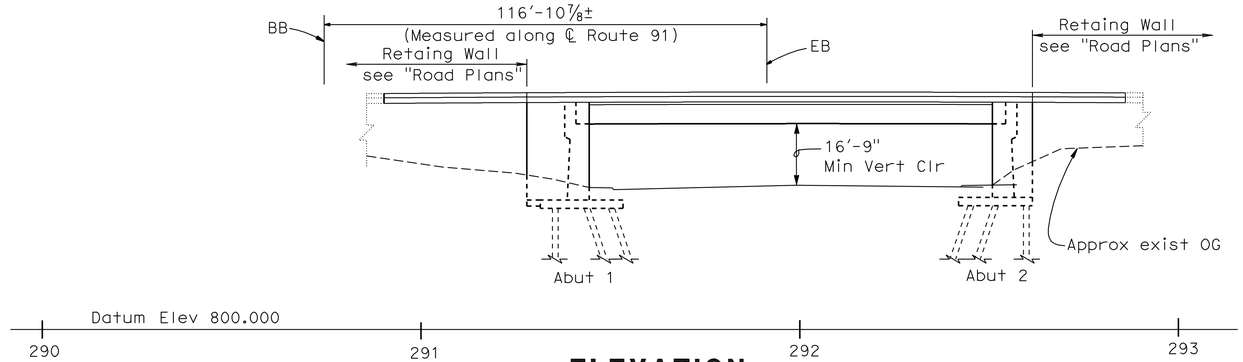

ELEVATION
1"=20'

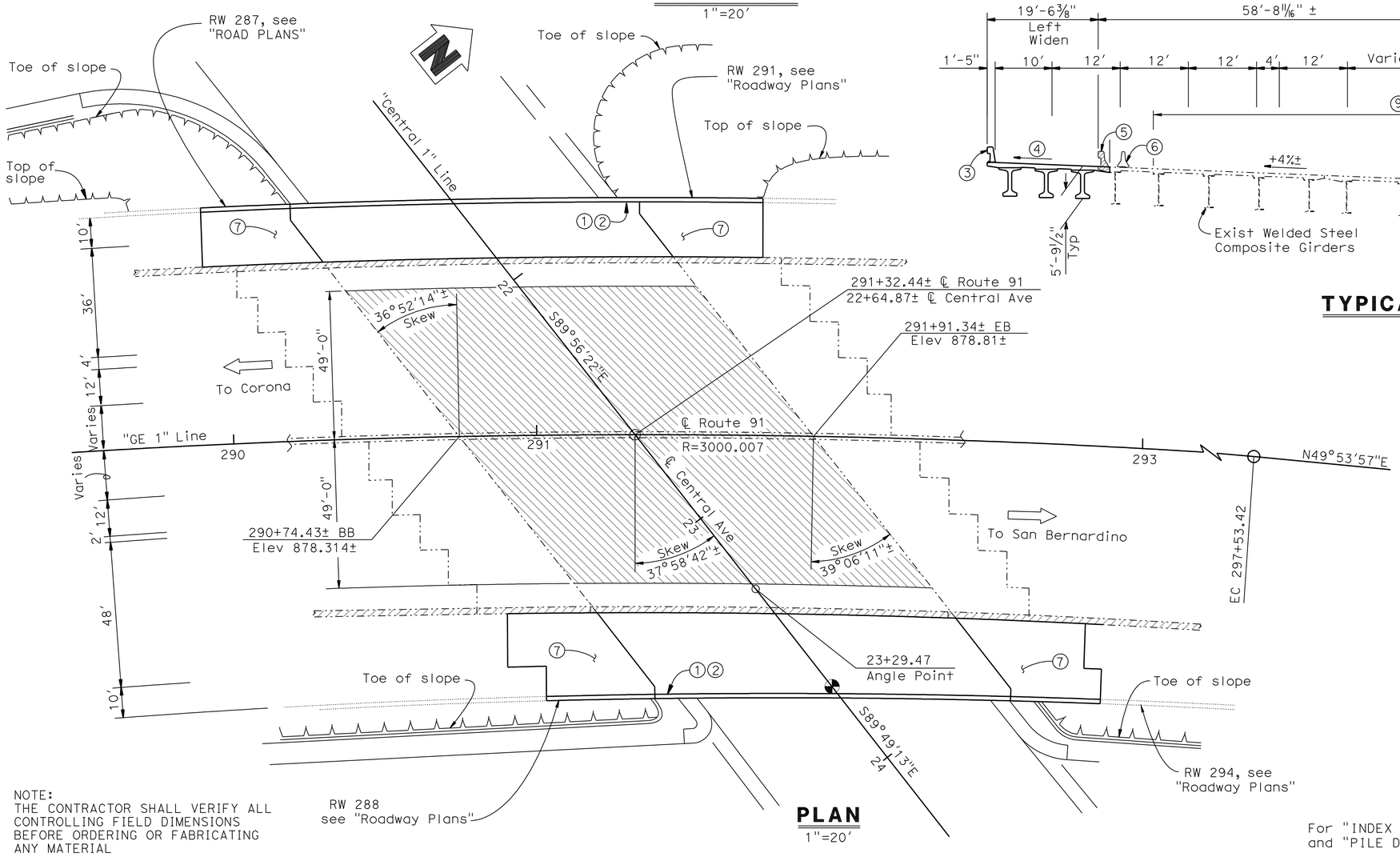

PLAN
1"=20'

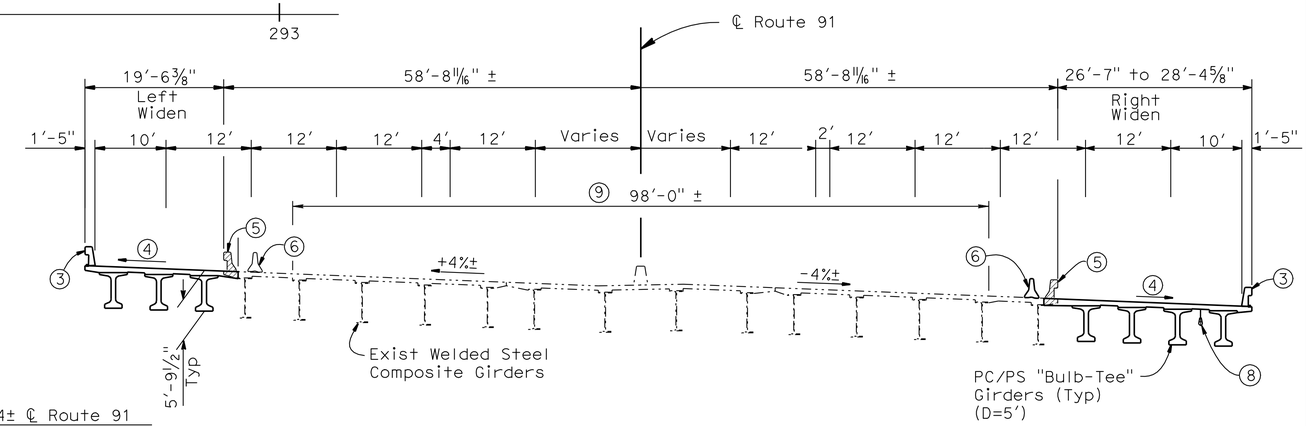

TYPICAL SECTION
3/32"=1'-0"

NOTES:
1. Paint "BRIDGE NO. 56-0356"
2. Paint "CENTRAL AVENUE UC"
3. Concrete Barrier Type 732 (Mod)
4. Match Existing Grade and Cross Slope
5. Remove Concrete Barrier Type 25
6. Temporary K-Rail, see "Road Plans"
7. Structure Approach Type N (30S)
8. 4" Ø Communication Conduit, see "ROAD PLANS"
9. Clean and treat bridge deck with methcrylate Prior to bridge deck treatment, remove unsound concrete and patch with rapid setting concrete

NOTE:
THE CONTRACTOR SHALL VERIFY ALL CONTROLLING FIELD DIMENSIONS BEFORE ORDERING OR FABRICATING ANY MATERIAL

For "INDEX TO PLANS", "GENERAL NOTES", "QUANTITIES and "PILE DATA", see "INDEX TO PLANS" sheet

DANIEL T. ADAMS
DESIGN ENGINEER

	BY	CHECKED	
DESIGN	F. Chen	M. Crete	LOAD & RESISTANCE FACTOR DESIGN — LIVE LOADING: HL93 W/"LOW-BOY"; PERMIT DESIGN VEHICLE
DETAILS	Y. Tang, R. Kirkland	M. Crete	LAYOUT — BY H. Vu — CHECKED F. Chen
QUANTITIES	F. Chen	M. Crete	SPECIFICATIONS — BY — PLANS AND SPECS COMPARED

ORIGINAL SCALE IN INCHES FOR REDUCED PLANS 0 1 2 3

STATE OF CALIFORNIA
DEPARTMENT OF TRANSPORTATION

DIVISION OF ENGINEERING SERVICES
STRUCTURE DESIGN
DESIGN BRANCH 10

CU 08
EA 448401

BRIDGE NO. 56-0356
POST MILE 18.40

CENTRAL AVENUE UC (WIDEN)
GENERAL PLAN

DISREGARD PRINTS BEARING EARLIER REVISION DATES

REVISION DATES: 7-18-08 8-21-08 10-1-08 06-10-09 09-03-09 7-09-10 8-04-10

SHEET 1 OF 26

STRUCTURES DESIGN GENERAL PLAN SHEET (ENGLISH) (REV.07-24-06)

FILE => 560356agp01.dgn

USERNAME => trcarol DATE PLOTTED => 30-APR-2011 TIME PLOTTED => 12:57

DIST	COUNTY	ROUTE	POST MILES TOTAL PROJECT	SHEET No	TOTAL SHEETS
08	Riv	91	15.6/21.6	1709	2028

REGISTERED CIVIL ENGINEER 11-30-10 DATE

4-25-11
PLANS APPROVAL DATE

REGISTERED PROFESSIONAL ENGINEER HUAN VU No. 60696 Exp. 12-31-10 CIVIL STATE OF CALIFORNIA

The State of California or its officers or agents shall not be responsible for the accuracy or completeness of electronic copies of this plan sheet.

INDEX TO PLANS

SHEET NO.	TITLE
1	GENERAL PLAN
2	INDEX TO PLANS
3	FOUNDATION PLAN
4	ABUTMENT NO. 1 LAYOUT
5	ABUTMENT NO. 2 LAYOUT
6	ABUTMENT DETAILS NO. 1
7	ABUTMENT DETAILS NO. 2
8	ABUTMENT DETAILS NO. 3
9	ABUTMENT DETAILS NO. 4
10	ABUTMENT DETAILS NO. 5
11	ABUTMENT DETAILS NO. 6
12	ABUTMENT DETAILS NO. 7
13	ABUTMENT DETAILS NO. 8
14	ABUTMENT FOOTING PILES LAYOUT
15	CONCRETE REMOVAL
16	TYPICAL SECTION
17	GIRDER LAYOUT
18	PC/PS BULB-TEE GIRDER (HARPED STRANDS)
19	PC/PS BULB-TEE GIRDER (MISCELLANEOUS DETAILS)
20	STRUCTURE APPROACH TYPE N(30S)
21	STRUCTURE APPROACH DRAINAGE DETAILS
22	ARCHITECTURAL DETAILS
23	LOG OF TEST BORINGS 1 OF 4
24	LOG OF TEST BORINGS 2 OF 4
25	LOG OF TEST BORINGS 3 OF 4
26	LOG OF TEST BORINGS 4 OF 4

STANDARD PLANS DATED MAY 2006

A10A	ACRONYMS AND ABBREVIATIONS (SHEET 1 OF 2)
A10B	ACRONYMS AND ABBREVIATIONS (SHEET 2 OF 2)
A10C	SYMBOLS (SHEET 1 OF 2)
A10D	SYMBOLS (SHEET 2 OF 2)
A62C	LIMITS OF PAYMENT FOR EXCAVATION AND BACKFILL-BRIDGE
BO-1	BRIDGE DETAILS
BO-3	BRIDGE DETAILS
BO-5	BRIDGE DETAILS
BO-13	BRIDGE DETAILS
B3-8	RETAINING WALL DETAILS NO.1
B6-10	UTILITY OPENINGS T-BEAM
RSP B6-21	JOINT SEALS (MAXIMUM MOVEMENT RATING=50 mm)
B11-55	CONCRETE BARRIER TYPE 732

STANDARD PLAN SHEET NO.

DETAIL NO.

QUANTITIES

REMOVE UNSOUND CONCRETE	2	CF
CLEAN BRIDGE DECK	11,458	SQFT
BRIDGE REMOVAL (PORTION), LOCATION E	LUMP	SUM
STRUCTURE EXCAVATION (BRIDGE)	444	CY
STRUCTURE BACKFILL (BRIDGE)	853	CY
FURNISH STEEL PILING (HP 14 X 89)	3,811	LF
DRIVE STEEL PILE (HP 14 X 89)	86	EA
STRUCTURAL CONCRETE, BRIDGE FOOTING	212	CY
STRUCTURAL CONCRETE, BRIDGE	581	CY
STRUCTURAL CONCRETE, APPROACH SLAB (TYPE N)	145	CY
ARCHITECTURAL SURFACE(TEXTURED CONCRETE) SPLIT SLATE TEXTURE	1,389	SQFT
DRILL AND BOND DOWEL	287	LF
RAPID SETTING CONCRETE (PATCH)	2	CF
FURNISH PRECAST PRESTRESSED CONCRETE BULB-TEE GIRDER (110'-120')	7	EA
ERECT PRECAST PRESTRESSED CONCRETE GIRDER	7	EA
JOINT SEAL (MR 1/2")	58	LF
JOINT SEAL (MR 1")	58	LF
BAR REINFORCING STEEL (BRIDGE)	127,948	LB
TREAT BRIDGE DECK	11,458	SQFT
FURNISH BRIDGE DECK TREATMENT MATERIAL	127	GAL
CONCRETE BARRIER (TYPE 732)	271	LF

GENERAL NOTES
LOAD AND RESISTANCE FACTOR DESIGN

DESIGN: AASHTO LRFD BRIDGE DESIGN SPECIFICATIONS, 3rd Edition with 2006 Interims and CALTRANS Amendments, V3.06.01.

SEISMIC DESIGN: Caltrans Seismic Design Criteria (SDC) Version 1.4, July, 2006

DEAD LOAD: Includes 35 Psf for future wearing surface. Includes 10% of additional dead load between girders to compensate for the use of permanent steel deck forms.

LIVE LOADING: HL93 with alternative and permit design load.

SEISMIC LOADING: CALTRANS SDC ARS Curve for Soil Profile Type C Spectrum Peak Rock Acceleration = 0.4 g,

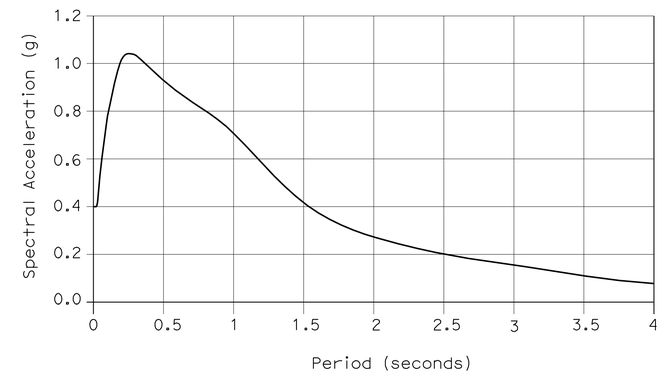

Modified CALTRANS SDC ARS Curve:
Type C Soil Profile, Magnitude Mw=6.75, 5% Damping

REINFORCED CONCRETE: f_y = 60 ksi
f'_c = 3600 psi, unless otherwise noted
n = 8

PRESTRESSED CONCRETE: See " Prestressing Notes" on "PRESTRESSED BULB-TEE GIRDER" sheet

PILE DATA TABLE

Location	Pile Type	Nominal Resistance (kips) Compression	Nominal Resistance (kips) Tension	Design Tip Elevation (ft)	Specified Tip Elevation (ft)	Nominal Driving Resistance Required (kips)
Abut 1 R	HP 14 x 89 "H" Pile	250	0	805.0 (a)	805.0	250
Abut 1 L	HP 14 x 89 "H" Pile	260	0	802.0 (a)	802.0	260
Abut 2 R	HP 14 x 89 "H" Pile	240	0	810.0 (a)	810.0	240
Abut 2 L	HP 14 x 89 "H" Pile	260	0	804.0 (a)	804.0	260

Notes:

1. Design Tip Elev is controlled by (a) Compression

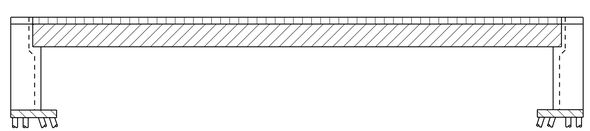

Structural Concrete, Bridge (4000 psi @ 28 days)

Structural Concrete, Bridge

Structural Concrete, Bridge Footing

Indicates PC/PS Bulb-Tee Girders

CONCRETE STRENGTH AND TYPE LIMITS

NO SCALE

	BY	CHECKED
DESIGN	F. Chen	M. Crete
DETAILS	Y. Tang	M. Crete
QUANTITIES	F. Chen	M. Crete

STATE OF CALIFORNIA
DEPARTMENT OF TRANSPORTATION

DIVISION OF ENGINEERING SERVICES
STRUCTURE DESIGN
DESIGN BRANCH 10

BRIDGE NO. 56-0356
POST MILE 18.40

CENTRAL AVENUE UC (WIDEN)
INDEX TO PLANS

STRUCTURES DESIGN DETAIL SHEET (ENGLISH) (REV. 10/25/05)

ORIGINAL SCALE IN INCHES FOR REDUCED PLANS 0 1 2 3

CU 08
EA 448401

DISREGARD PRINTS BEARING EARLIER REVISION DATES 7-08-10 8-04-10

REVISION DATES

SHEET 2 OF 26

FILE => 560356aitp02.dgn

USERNAME => trcarol DATE PLOTTED => 30-APR-2011 TIME PLOTTED => 12:57

DIST	COUNTY	ROUTE	POST MILES TOTAL PROJECT	SHEET No	TOTAL SHEETS
08	Riv	91	15.6/21.6	1710	2028

REGISTERED CIVIL ENGINEER — DATE 11-30-10

4-25-11
PLANS APPROVAL DATE

REGISTERED PROFESSIONAL ENGINEER — HUAN VU — No. C60696 — Exp. 12-31-10 — CIVIL — STATE OF CALIFORNIA

The State of California or its officers or agents shall not be responsible for the accuracy or completeness of electronic copies of this plan sheet.

CURVE DATA				
No.	R	Δ	T	L
1	150.00	24°42′12″	32.85	64.67
2	3078.26	08°23′26″	225.80	450.80
3	3078.26	06°04′59″	163.56	326.82
4	3000.00	32°38′07″	878.26	1708.77
5	2916.10	05°39′59″	144.32	288.40
6	2916.10	02°51′56″	72.94	145.84

BRIDGE LOCATION (56-0356)

7 - 56.97′ Lt ℄ SR 91, Sta 291+46.53, Elev= 879.98±
8 - 57.27′ Rt ℄ SR 91, Sta 292+37.56, Elev= 876.64±
9 - 57.64′ Lt ℄ SR 91, Sta 290+33.15, Elev= 879.37±
10 - 56.89′ Rt ℄ SR 91, Sta 291+17.32, Elev= 876.30±

A STA. 22+64.87 "CENTRAL1" LINE =
STA.291+32.44"℄ RTE 91"

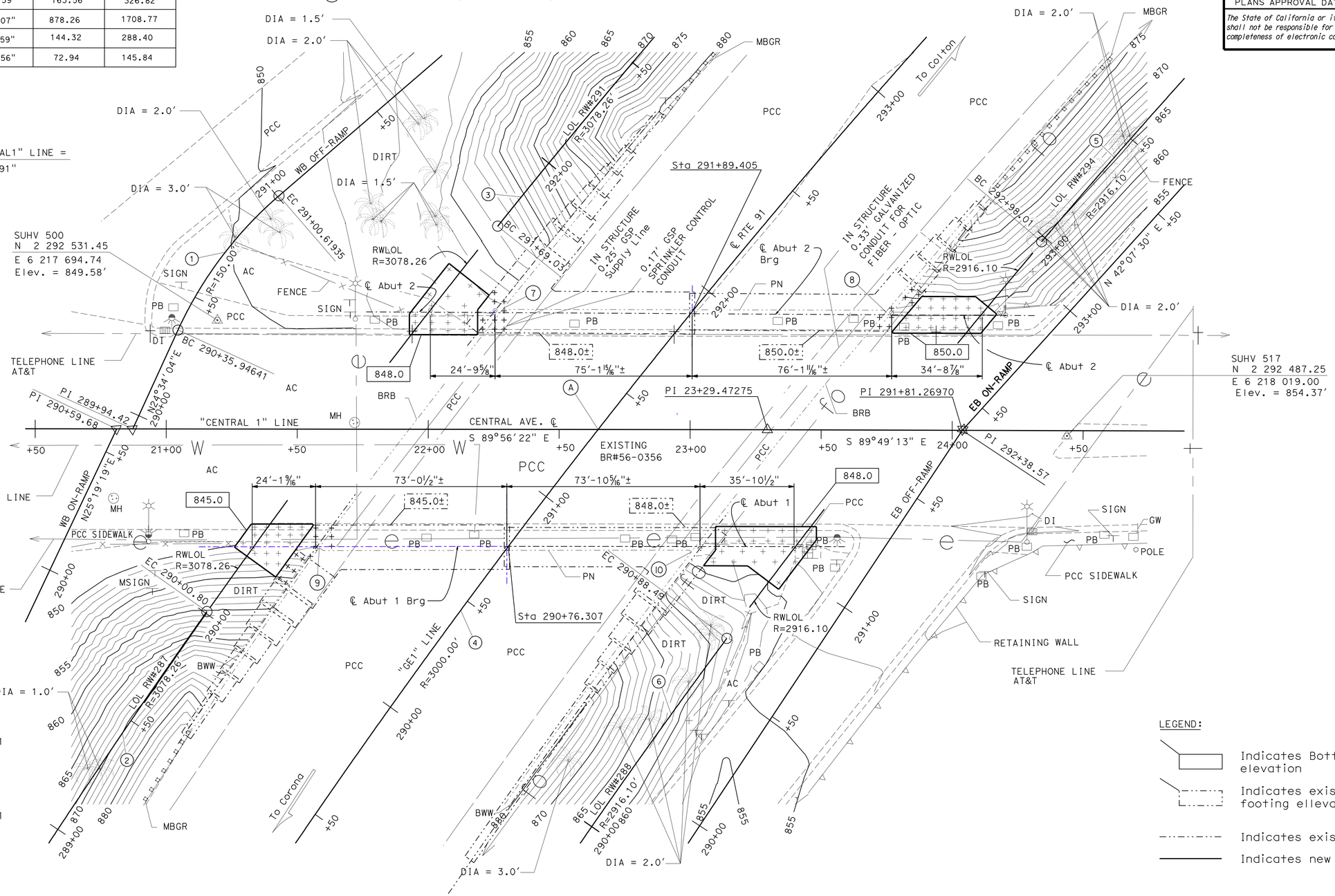

SURVEY CONTROL

SUHV 500
PK/W ON SIDEWALK
140.68′ Lt. ℄ Rte 91
Sta. 290+78.29
N 2 292 531.45
E 6 217 694.74
Elev. = 849.58′

SUHV 517
PK/W ON ISLAND TOC
140.40′ Rt. ℄ Rte 91
Sta. 292+46.10
N 2 292 487.25
E 6 218 019.00
Elev. = 854.37′

LEGEND:

- Indicates Bottom of footing elevation
- Indicates existing bottom of footing ellevation
- Indicates existing bridge construction
- Indicates new bridge construction

PRELIMINARY INVESTIGATION SECTION							
SCALE	VERT.DATUM NAVD 88	PHOTOGRAMMETRY AS OF: X					
1:20	HORZ.DATUM NAD 83(1991.35)	SURVEYED	BY T.PHUNG 10/08	CHECKED	BY C.STEWART 10/08		
ALIGNMENT TIES X		DRAFTED	BY S.ABASSY 11/08	CHECKED	BY L.MANABO 11/08		

DESIGN	BY F. Chen	CHECKED M. Crete	
DETAILS	BY R. Kirkland	CHECKED M. Crete	
QUANTITIES	BY F. Chen	CHECKED M. Crete	

STATE OF CALIFORNIA
DEPARTMENT OF TRANSPORTATION

DIVISION OF ENGINEERING SERVICES
STRUCTURE DESIGN
DESIGN BRANCH 10

BRIDGE NO. 56-0356
POST MILE 18.41

CENTRAL AVENUE UC (WIDEN)
FOUNDATION PLAN

STRUCTURES FOUNDATION PLAN SHEET (ENGLISH) (REV. 10/25/05)

ORIGINAL SCALE IN INCHES FOR REDUCED PLANS 0 1 2 3

CU 08
EA 448401

DISREGARD PRINTS BEARING EARLIER REVISION DATES — REVISION DATES: 11/26/08 8/24/09 09/03/09

SHEET 3 OF 26

FILE => 560356efp03.dgn

USERNAME => trcar01 DATE PLOTTED => 30-APR-2011 TIME PLOTTED => 12:57

DIST	COUNTY	ROUTE	POST MILES TOTAL PROJECT	SHEET No	TOTAL SHEETS
08	Riv	91	15.6/21.6	1711	2028

REGISTERED CIVIL ENGINEER 11-30-10 DATE

4-25-11
PLANS APPROVAL DATE

REGISTERED PROFESSIONAL ENGINEER HUAN VU No. 60696 Exp. 12-31-10 CIVIL STATE OF CALIFORNIA

The State of California or its officers or agents shall not be responsible for the accuracy or completeness of electronic copies of this plan sheet.

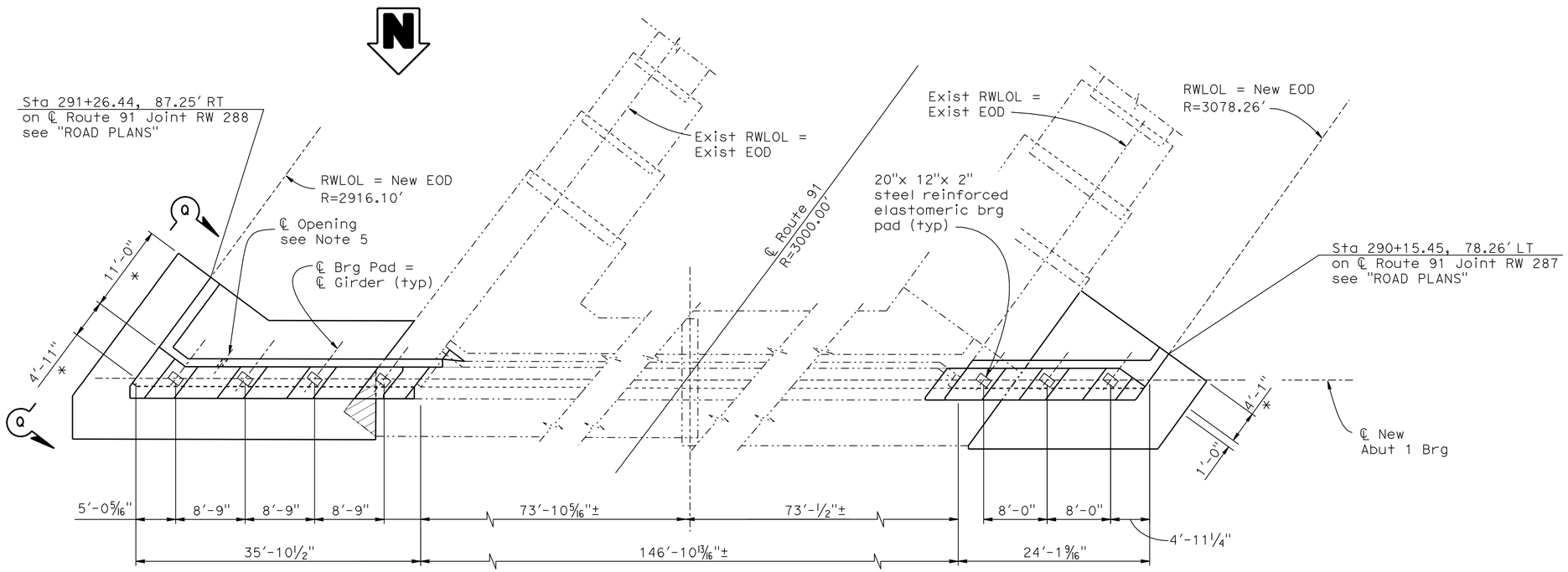

PLAN

1/8" = 1'-0"

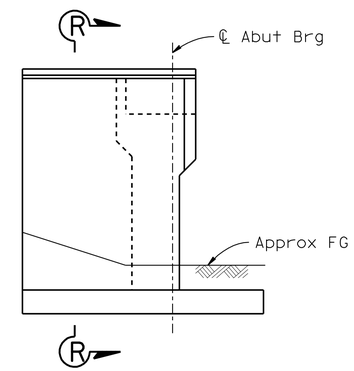

ELEVATION Q-Q

1/8" = 1'-0"

Abutment 1 Right is shown,
Abutment 2 Left is similar

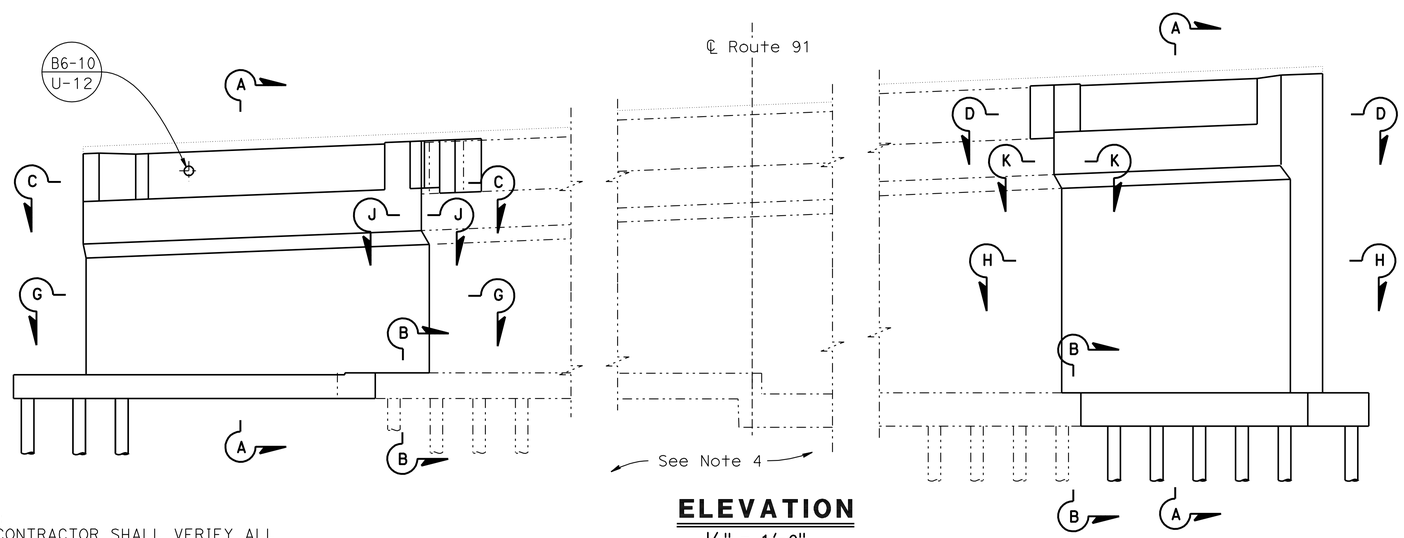

ELEVATION

1/8" = 1'-0"

NOTE:
THE CONTRACTOR SHALL VERIFY ALL CONTROLLING FIELD DIMENSIONS BEFORE ORDERING OR FABRICATING ANY MATERIAL.

NOTES:

1. For Section A-A, B-B and R-R, see "ABUTMENT DETAILS NO. 1" sheet.
2. For Section C-C and D-D, see "ABUTMENT DETAILS NO. 3" sheet.
3. For Section G-G, H-H, J-J and K-K see "ABUTMENT DETAILS NO. 5", sheet.
4. All piles not shown, see "ABUTMENT FOOTING PILES LAYOUT" sheet.
5. 6" Ø hole for 4" communications Conduit. see "TYPICAL SECTION", sheet for location of opening.

LEGEND:

———	Indicates new construction
—·—·—·—	Indicates existing structure
▨	Indicates limits of existing concrete removal
*	Measured along RWLOL

DESIGN	BY F. Chen	CHECKED M. Crete	
DETAILS	BY R. Kirkland	CHECKED M. Crete	
QUANTITIES	BY F. Chen	CHECKED M. Crete	

STATE OF CALIFORNIA
DEPARTMENT OF TRANSPORTATION

DIVISION OF ENGINEERING SERVICES
STRUCTURE DESIGN
DESIGN BRANCH 10

BRIDGE NO. 56-0356
POST MILE 18.40

CENTRAL AVENUE UC (WIDEN)
ABUTMENT NO. 1 LAYOUT

STRUCTURES DESIGN DETAIL SHEET (ENGLISH) (REV. 10/25/05)

ORIGINAL SCALE IN INCHES FOR REDUCED PLANS 0 1 2 3

CU 08
EA 448401

DISREGARD PRINTS BEARING EARLIER REVISION DATES → 6/16/09

REVISION DATES

SHEET 4 OF 26

FILE => 560356fa01_lo4.dgn

USERNAME => trcarol DATE PLOTTED => 30-APR-2011 TIME PLOTTED => 12:58

DIST	COUNTY	ROUTE	POST MILES TOTAL PROJECT	SHEET No	TOTAL SHEETS
08	Riv	91	15.6/21.6	1712	2028

REGISTERED CIVIL ENGINEER 11-30-10 DATE

4-25-11
PLANS APPROVAL DATE

REGISTERED PROFESSIONAL ENGINEER HUAN VU No. 60696 Exp. 12-31-10 CIVIL STATE OF CALIFORNIA

The State of California or its officers or agents shall not be responsible for the accuracy or completeness of electronic copies of this plan sheet.

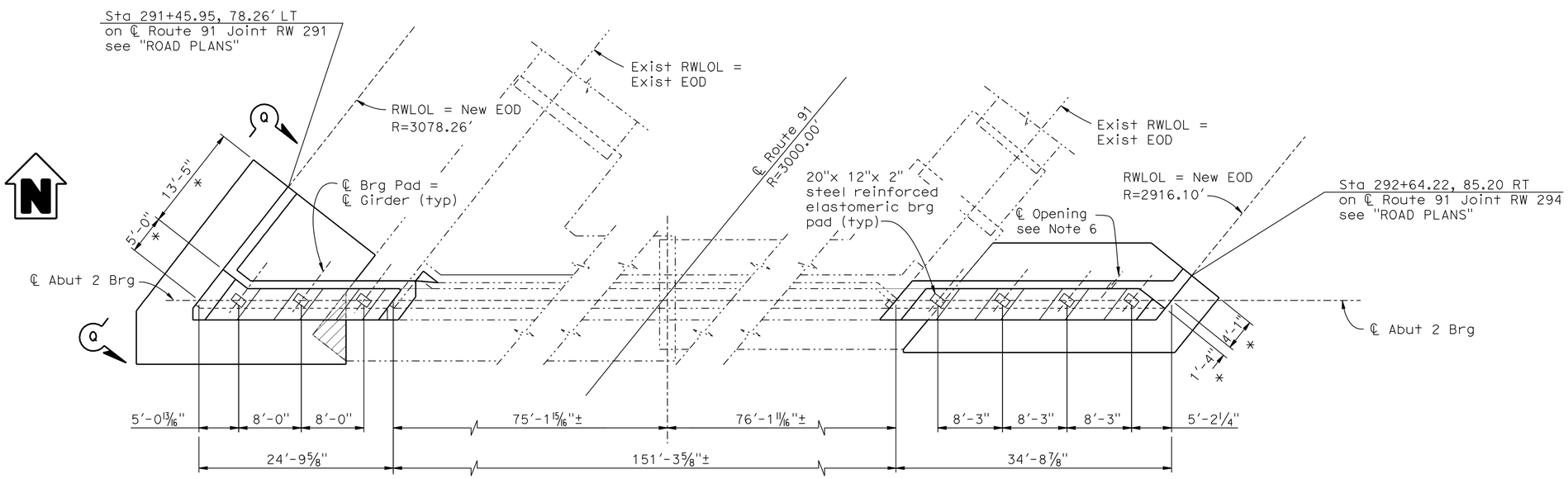

PLAN

1/8" = 1'-0"

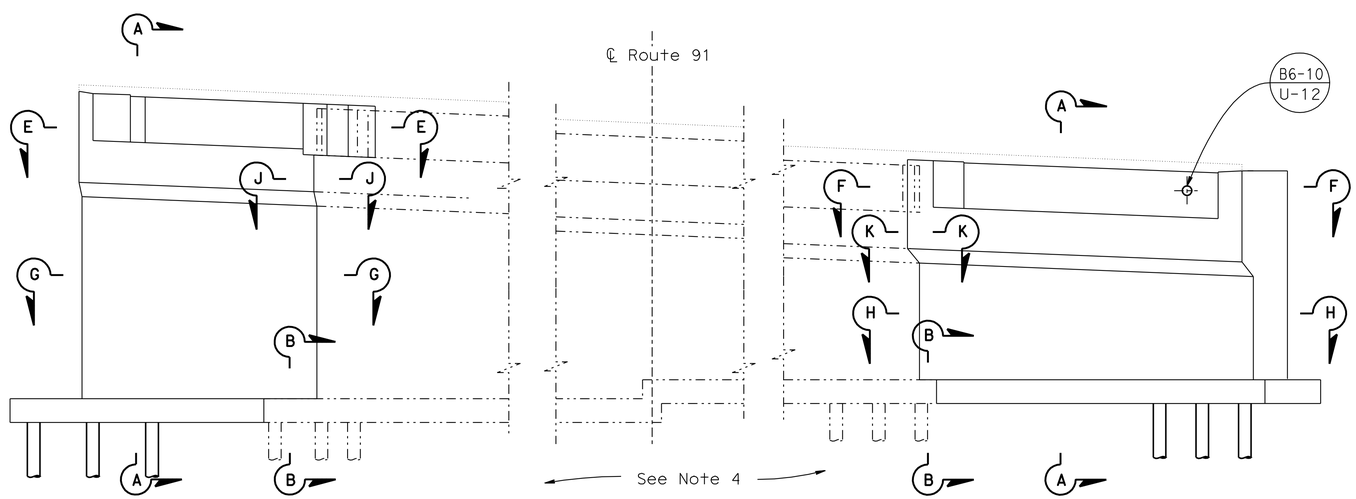

ELEVATION

1/8" = 1'-0"

NOTE:
THE CONTRACTOR SHALL VERIFY ALL CONTROLLING FIELD DIMENSIONS BEFORE ORDERING OR FABRICATING ANY MATERIAL.

NOTES:

1. For "SECTION A-A and B-B", see "ABUTMENT DETAILS NO. 1" sheet.
2. For "SECTION E-E and F-F", see "ABUTMENT DETAILS NO. 4" sheet.
3. For "SECTION G-G, H-H, J-J and K-K, see "ABUTMENT DETAILS NO. 5" sheet.
4. All piles not shown, see "ABUTMENT FOOTING PILES LAYOUT" sheet.
5. For "ELEVATION Q-Q", SEE "ABUTMENT NO. 1 LAYOUT" sheet.
6. 6" Ø hole for 4" communications Conduit. see "TYPICAL SECTION", sheet for location of opening.

LEGEND:

————	Indicates new construction
—·—·—·—	Indicates existing structure
//////	Indicates limits of existing concrete removal
*	Measured along RWLOL

DESIGN	BY F. Chen	CHECKED M. Crete	
DETAILS	BY R. Kirkland/Y. Tang	CHECKED M. Crete	
QUANTITIES	BY F. Chen	CHECKED M. Crete	

STATE OF CALIFORNIA
DEPARTMENT OF TRANSPORTATION

DIVISION OF ENGINEERING SERVICES
STRUCTURE DESIGN
DESIGN BRANCH 10

BRIDGE NO. 56-0356
POST MILE 18.40

CENTRAL AVENUE UC (WIDEN)
ABUTMENT NO. 2 LAYOUT

STRUCTURES DESIGN DETAIL SHEET (ENGLISH) (REV. 10/25/05)

ORIGINAL SCALE IN INCHES FOR REDUCED PLANS 0 1 2 3

CU 08
EA 448401

DISREGARD PRINTS BEARING EARLIER REVISION DATES

REVISION DATES: ~~6/16/09~~ 10/01/09

SHEET 5 OF 26

FILE => 560356fa02_lo5.dgn

USERNAME => trcarol DATE PLOTTED => 30-APR-2011 TIME PLOTTED => 12:58

DIST	COUNTY	ROUTE	POST MILES TOTAL PROJECT	SHEET No	TOTAL SHEETS
08	Riv	91	15.6/21.6	1713	2028

REGISTERED CIVIL ENGINEER 11-30-10 DATE

4-25-11
PLANS APPROVAL DATE

REGISTERED PROFESSIONAL ENGINEER HUAN VU No. 60696 Exp. 12-31-10 CIVIL STATE OF CALIFORNIA

The State of California or its officers or agents shall not be responsible for the accuracy or completeness of electronic copies of this plan sheet.

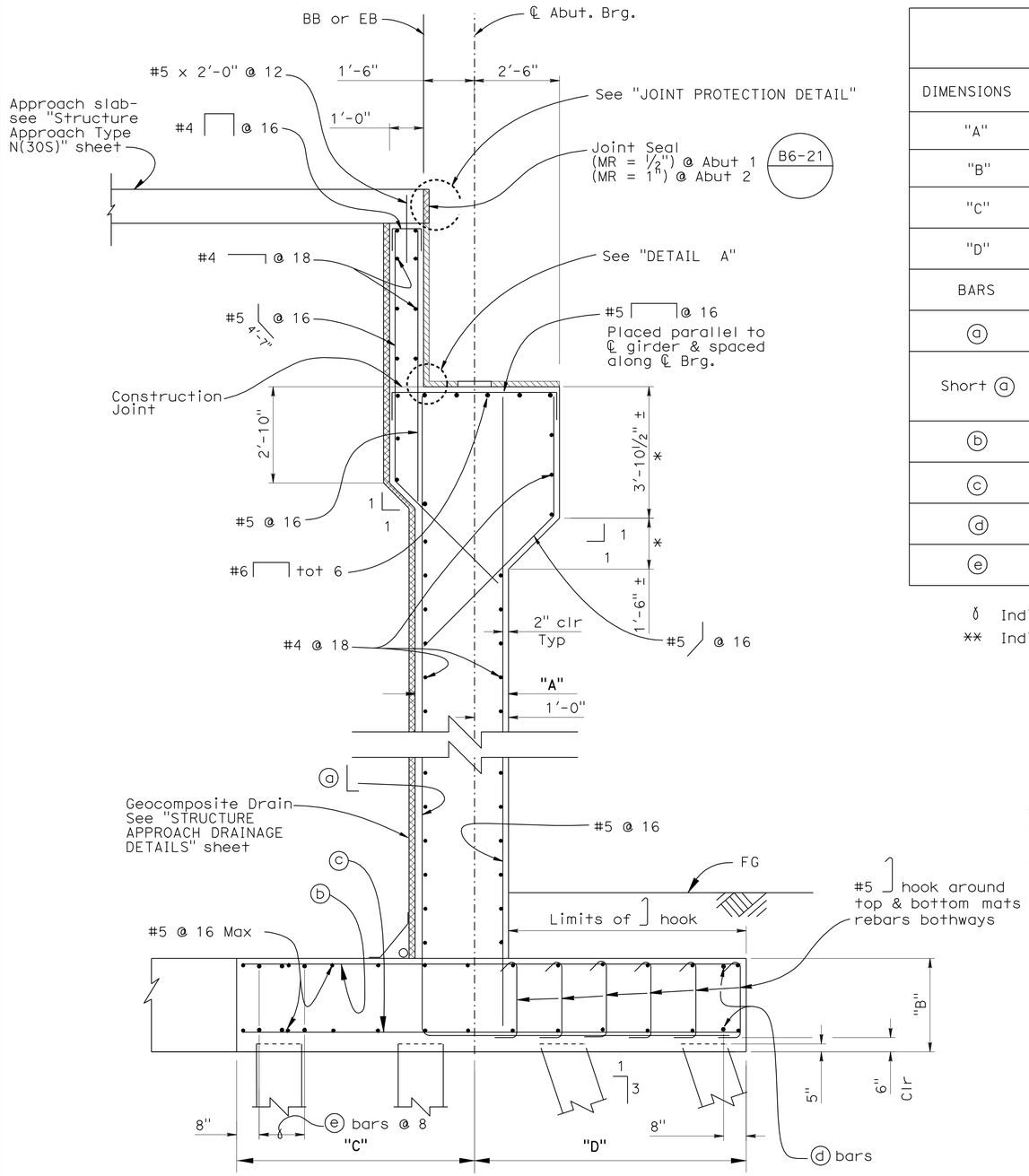

SECTION A-A

ABUTMENT WIDENING

1/2" =1'-0"

NOTE:
THE CONTRACTOR SHALL VERIFY ALL CONTROLLING FIELD DIMENSIONS BEFORE ORDERING OR FABRICATING ANY MATERIAL.

WIDENING LOCATION

DIMENSIONS	ABUTMENT 1		ABUTMENT 2	
	LEFT SIDE	RIGHT SIDE	LEFT SIDE	RIGHT SIDE
"A"	3'-0"	2'-9"	3'-0"	2'-6"
"B"	3'-3"	2'-9"	3'-0"	2'-6"
"C"	8'-0"	7'-0"	7'-6"	7'-0"
"D"	9'-0"	8'-0"	8'-6"	7'-0"
BARS				
a	# 11 @ 8" δ	# 11 @ 10" δ	# 11 @ 9 δ	# 11 @ 6
Short a	# 11 @ 8 L = 11'-0"**	# 11 @ 10 L = 9'-6"**	# 11 @ 9 L = 11'-0"**	
b	# 7 @ 8"	# 7 @ 10"	# 7 @ 9"	# 7 @ 12"
c	# 7 @ 8"	# 7 @ 10"	# 7 @ 9"	# 7 @ 12"
d	2 - # 8	2 - # 9	2 - # 8	2 - # 10
e	2 - # 10	4 - # 9	4 - # 8	6 - # 8

δ Indicates a bars bundled with short a

** Indicates length of short a bars above top of footing

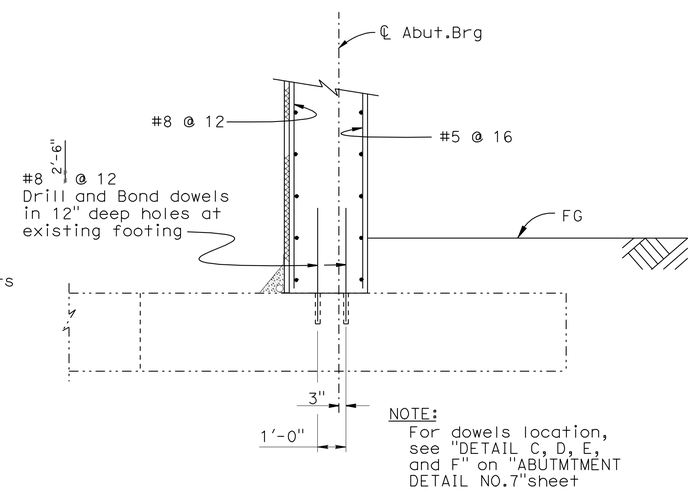

NOTE:
For dowels location, see "DETAIL C, D, E, and F" on "ABUTMTMENT DETAIL NO.7"sheet

SECTION B-B

3/8" =1'-0"

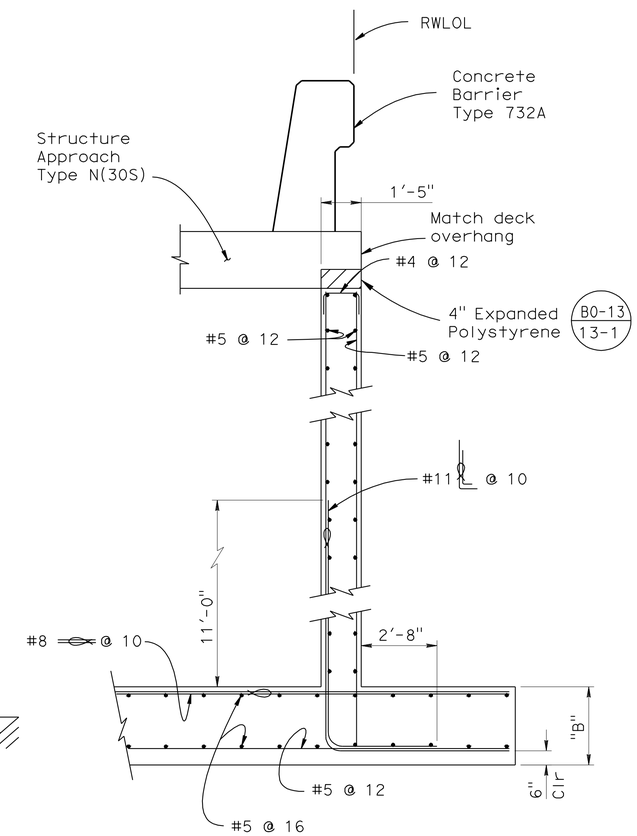

SECTION R-R

3/8" =1'-0"

LEGEND:

———	Indicates new construction
—·—·—	Indicates existing structure
*	Match Existing Dimension

NOTES:

1. For location of "SECTION A-A" and "SECTION B-B" see "ABUTMENT NO. 1 LAYOUT" and "ABUTMENT NO. 2 LAYOUT" sheets.
2. For location of "SECTION R-R" see "ABUTMENT NO. 1 LAYOUT" sheet.
3. For "DETAIL A" see "ABUTMENT DETAILS NO. 2" sheet.
4. For "Joint Protection Details" see "ABUTMENT DETAILS NO. 2" sheet.

	BY	CHECKED
DESIGN	F. Chen	M. Crete
DETAILS	Y. Tang, R. Kirkland	M. Crete
QUANTITIES	F. Chen	M. Crete

STATE OF CALIFORNIA
DEPARTMENT OF TRANSPORTATION

DIVISION OF ENGINEERING SERVICES
STRUCTURE DESIGN
DESIGN BRANCH 10

BRIDGE NO. 56-0356
POST MILE 18.40

CENTRAL AVENUE UC (WIDEN)
ABUTMENT DETAILS NO. 1

STRUCTURES DESIGN DETAIL SHEET (ENGLISH) (REV. 10/25/05)

ORIGINAL SCALE IN INCHES FOR REDUCED PLANS 0 1 2 3

CU 08
EA 448401

DISREGARD PRINTS BEARING EARLIER REVISION DATES

REVISION DATES: 03-16-09 6/16/09 08/25/09 09/24/09

SHEET 6 OF 26

FILE => 560356fadt1_06.dgn

USERNAME => trcarol DATE PLOTTED => 30-APR-2011 TIME PLOTTED => 12:58

DIST	COUNTY	ROUTE	POST MILES TOTAL PROJECT	SHEET No	TOTAL SHEETS
08	Riv	91	15.6/21.6	1714	2028

REGISTERED CIVIL ENGINEER 11-30-10 DATE

4-25-11
PLANS APPROVAL DATE

The State of California or its officers or agents shall not be responsible for the accuracy or completeness of electronic copies of this plan sheet.

REGISTERED PROFESSIONAL ENGINEER HUAN VU No. 60696 Exp. 12-31-10 CIVIL STATE OF CALIFORNIA

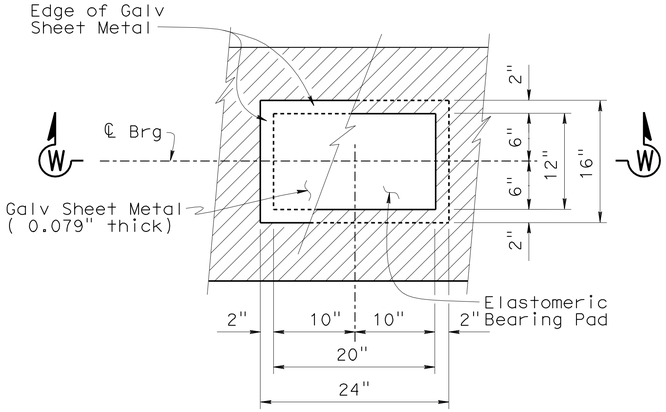

PLAN

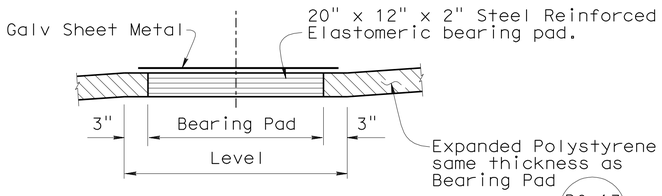

B0-13 / 13-1

SECTION W-W
BEARING PAD DETAIL

No Scale

Note:

Coat top of Bearing Pad with silicone grease prior to placing sheet metal.

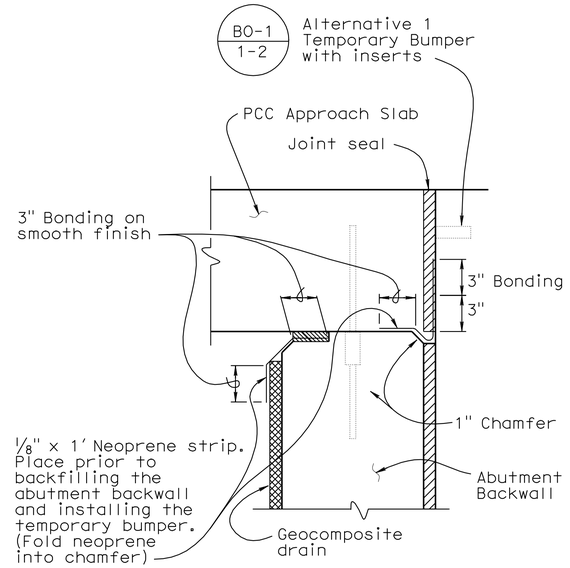

JOINT PROTECTION DETAIL

No Scale

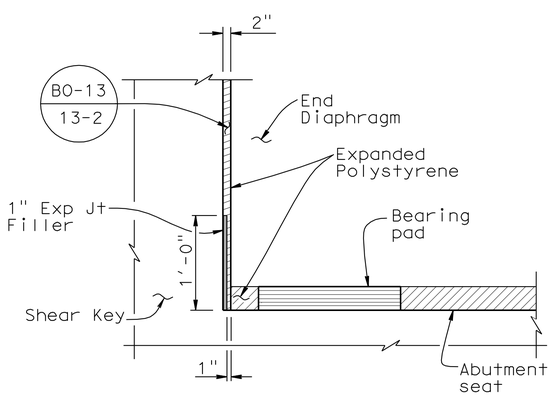

DETAIL "B"

No Scale

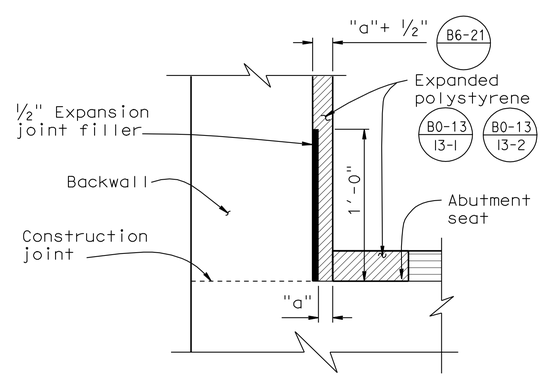

DETAIL "A"

No Scale

NOTE:
THE CONTRACTOR SHALL VERIFY ALL CONTROLLING FIELD DIMENSIONS BEFORE ORDERING OR FABRICATING ANY MATERIAL.

	BY	CHECKED
DESIGN	F. Chen	M. Crete
DETAILS	Y. Tang	M. Crete
QUANTITIES	F. Chen	M. Crete

STATE OF CALIFORNIA DEPARTMENT OF TRANSPORTATION

DIVISION OF ENGINEERING SERVICES STRUCTURE DESIGN
DESIGN BRANCH 10

BRIDGE NO. 56-0356
POST MILE 18.40

CENTRAL AVENUE UC (WIDEN)
ABUTMENT DETAILS NO. 2

STRUCTURES DESIGN DETAIL SHEET (ENGLISH) (REV. 10/25/05)

ORIGINAL SCALE IN INCHES FOR REDUCED PLANS 0 1 2 3

CU 08
EA 448401

DISREGARD PRINTS BEARING EARLIER REVISION DATES

REVISION DATES: 03-12-09

SHEET 7 OF 26

FILE => 560356fadt2_07.dgn

USERNAME => trcarol DATE PLOTTED => 30-APR-2011 TIME PLOTTED => 12:58

DIST	COUNTY	ROUTE	POST MILES TOTAL PROJECT	SHEET No	TOTAL SHEETS
08	Riv	91	15.6/21.6	1715	2028

REGISTERED CIVIL ENGINEER 11-30-10 DATE

4-25-11
PLANS APPROVAL DATE

REGISTERED PROFESSIONAL ENGINEER HUAN VU No. 60696 Exp. 12-31-10 CIVIL STATE OF CALIFORNIA

The State of California or its officers or agents shall not be responsible for the accuracy or completeness of electronic copies of this plan sheet.

NOTES:

1. For Location of "SECTION C-C" and "SECTION D-D" see "ABUTMENT NO. 1 LAYOUT" sheet.
2. For "ELEVATION T-T" and "ELEVATION S-S", see "ABUTMENT DETAILS NO. 7" sheet.
3. For "DETAIL B", see "ABUTMENT DETAILS NO. 2" sheet.
4. For "DETAIL H", see "ABUTMENT DETAILS NO. 8" sheet.

LEGEND:

——— Indicates new construction

—·—·— Indicates existing structure

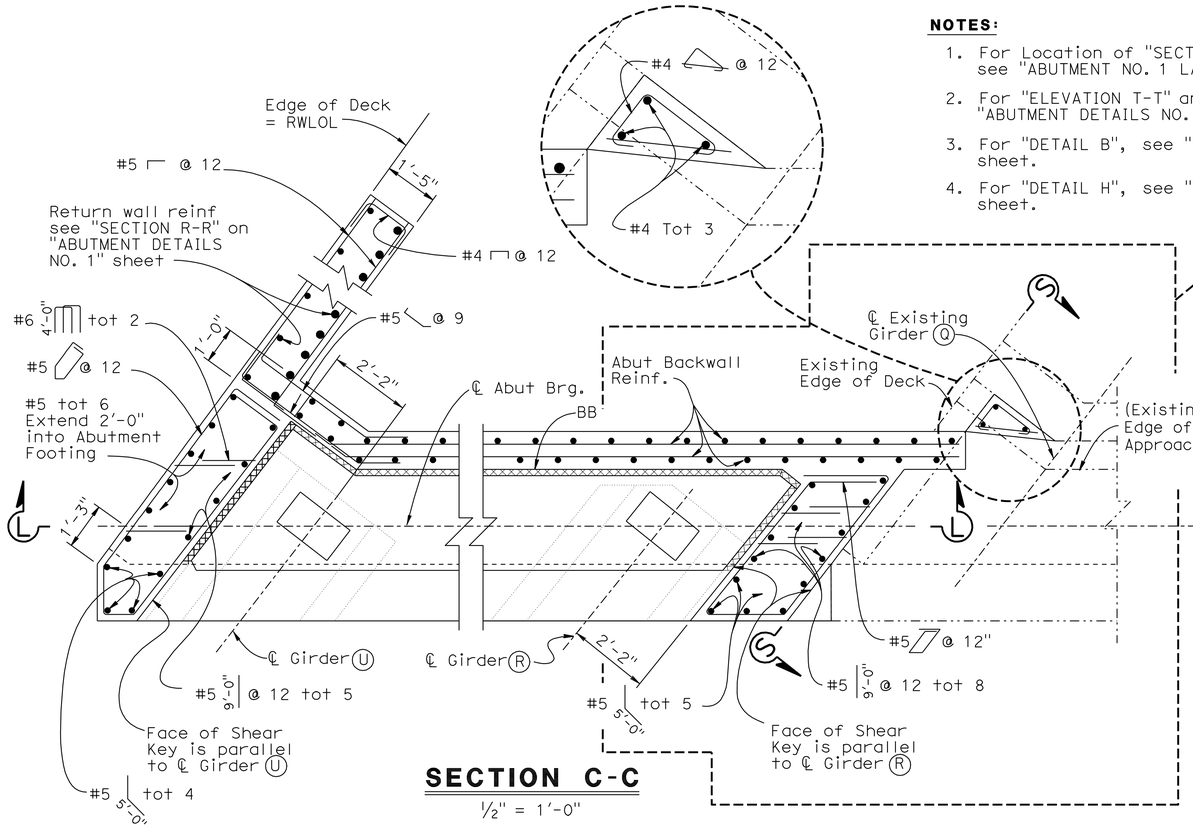

SECTION C-C

½" = 1'-0"

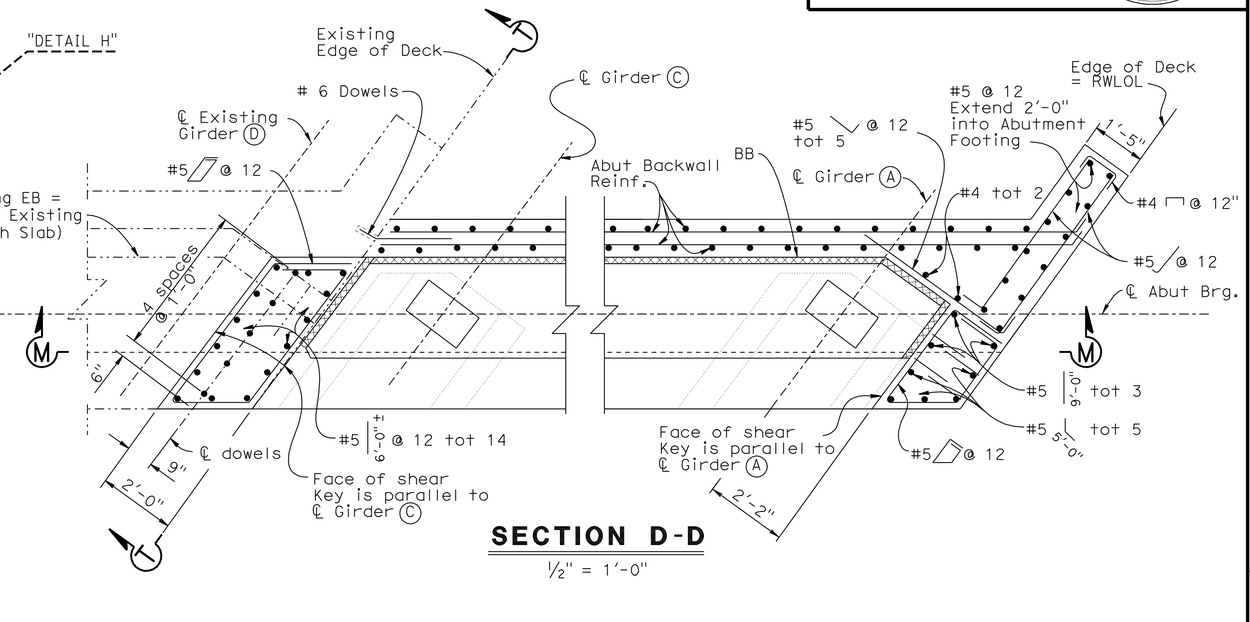

SECTION D-D

½" = 1'-0"

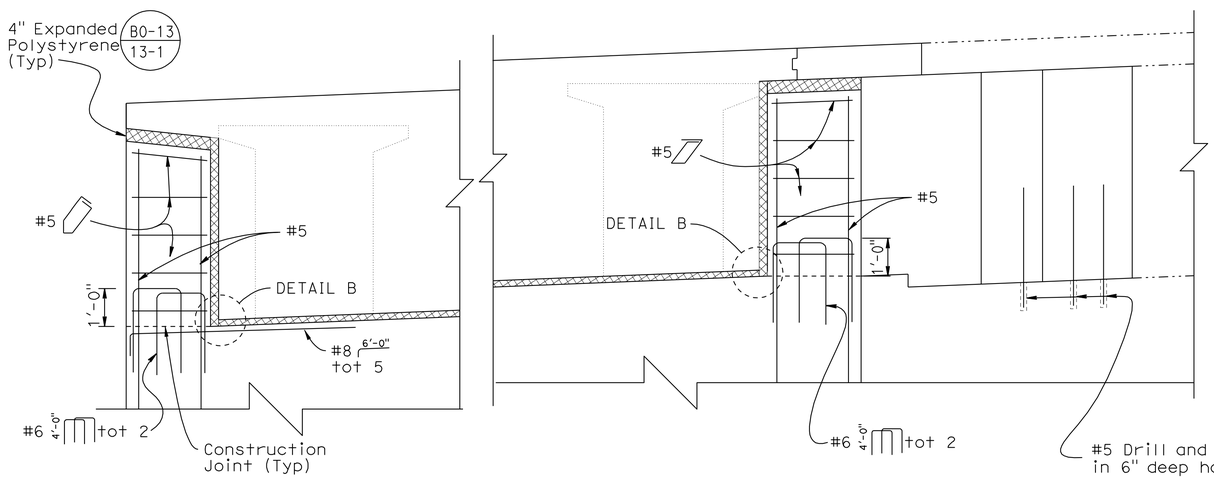

SECTION L-L

½" = 1'-0"

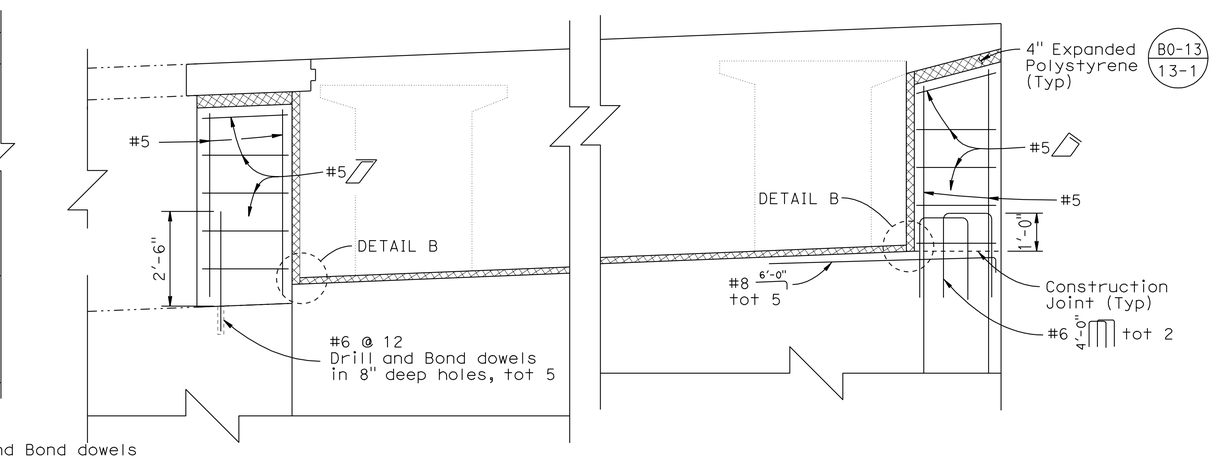

SECTION M-M

½" = 1'-0"

NOTE:
THE CONTRACTOR SHALL VERIFY ALL CONTROLLING FIELD DIMENSIONS BEFORE ORDERING OR FABRICATING ANY MATERIAL.

	BY	CHECKED
DESIGN	F. Chen	M. Crete
DETAILS	Y. Tang	M. Crete
QUANTITIES	F. Chen	M. Crete

STATE OF CALIFORNIA
DEPARTMENT OF TRANSPORTATION

DIVISION OF ENGINEERING SERVICES
STRUCTURE DESIGN
DESIGN BRANCH 10

BRIDGE NO. 56-0356
POST MILE 18.40

CENTRAL AVENUE UC (WIDEN)
ABUTMENT DETAILS NO. 3

STRUCTURES DESIGN DETAIL SHEET (ENGLISH) (REV. 10/25/05)

ORIGINAL SCALE IN INCHES FOR REDUCED PLANS 0 1 2 3

CU 08
EA 448401

DISREGARD PRINTS BEARING EARLIER REVISION DATES

REVISION DATES: 5-06-09 8-06-09 10-6-09

SHEET 8 OF 26

FILE => 560356fadt3_08.dgn

USERNAME => ttcarol DATE PLOTTED => 30-APR-2011 TIME PLOTTED => 12:58

DIST	COUNTY	ROUTE	POST MILES TOTAL PROJECT	SHEET No	TOTAL SHEETS
08	Riv	91	15.6/21.6	1716	2028

REGISTERED CIVIL ENGINEER 11-30-10 DATE

4-25-11
PLANS APPROVAL DATE

REGISTERED PROFESSIONAL ENGINEER HUAN VU No. 60696 Exp. 12-31-10 CIVIL STATE OF CALIFORNIA

The State of California or its officers or agents shall not be responsible for the accuracy or completeness of electronic copies of this plan sheet.

NOTES:

1. For Location of "SECTION E-E" and "SECTION F-F" see "ABUTMENT NO. 2 LAYOUT" sheet.
2. For "ELEVATION T-T" and "ELEVATION S-S", see "ABUTMENT DETAILS NO. 7" sheet.
3. For "DETAIL B", see "ABUTMENT DETAILS NO. 2" sheet.
4. For "DETAIL G", see "ABUTMENT DETAILS NO. 8" sheet.

LEGEND:

——— Indicates new construction

—·—·— Indicates existing structure

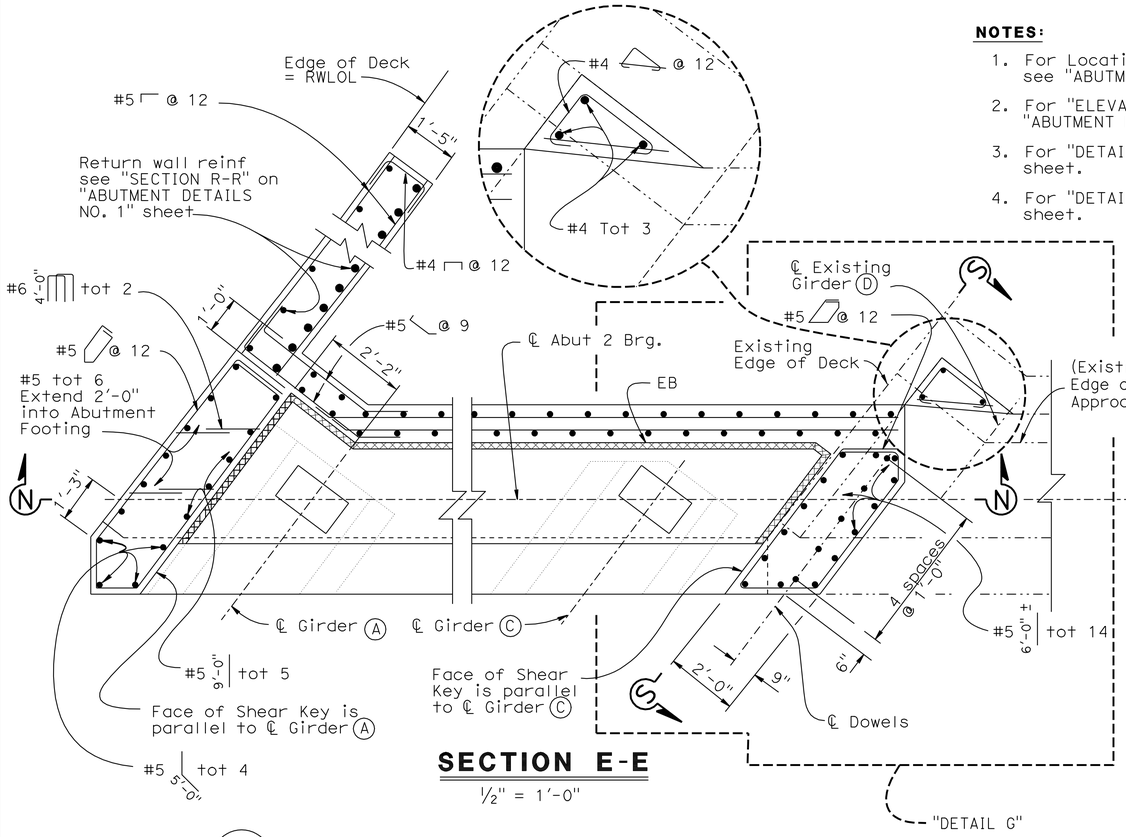

SECTION E-E

½" = 1'-0"

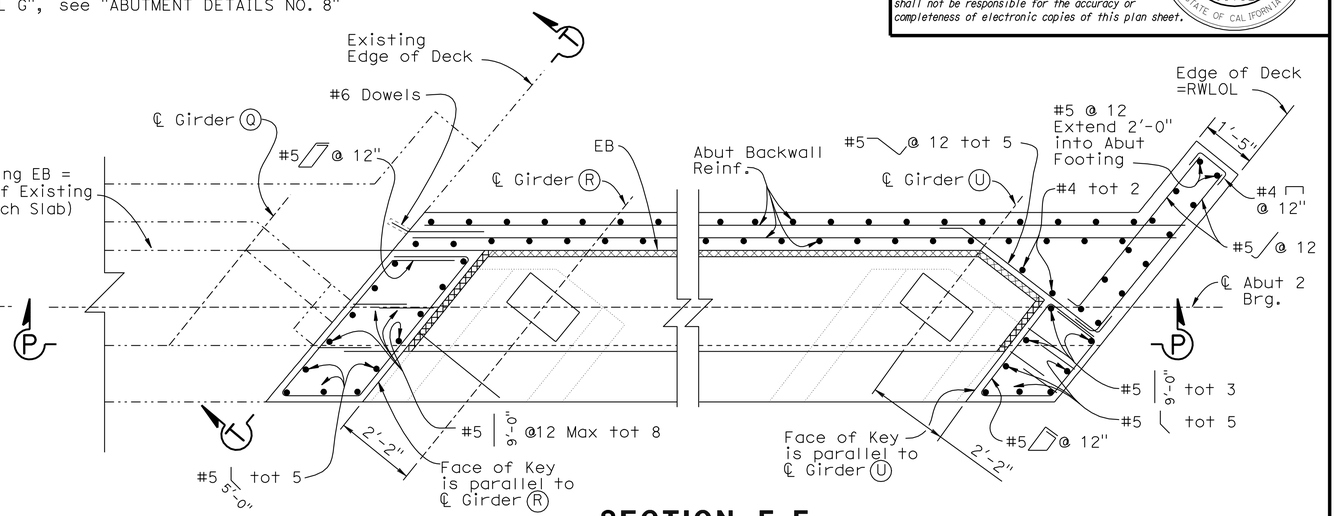

SECTION F-F

½" = 1'-0"

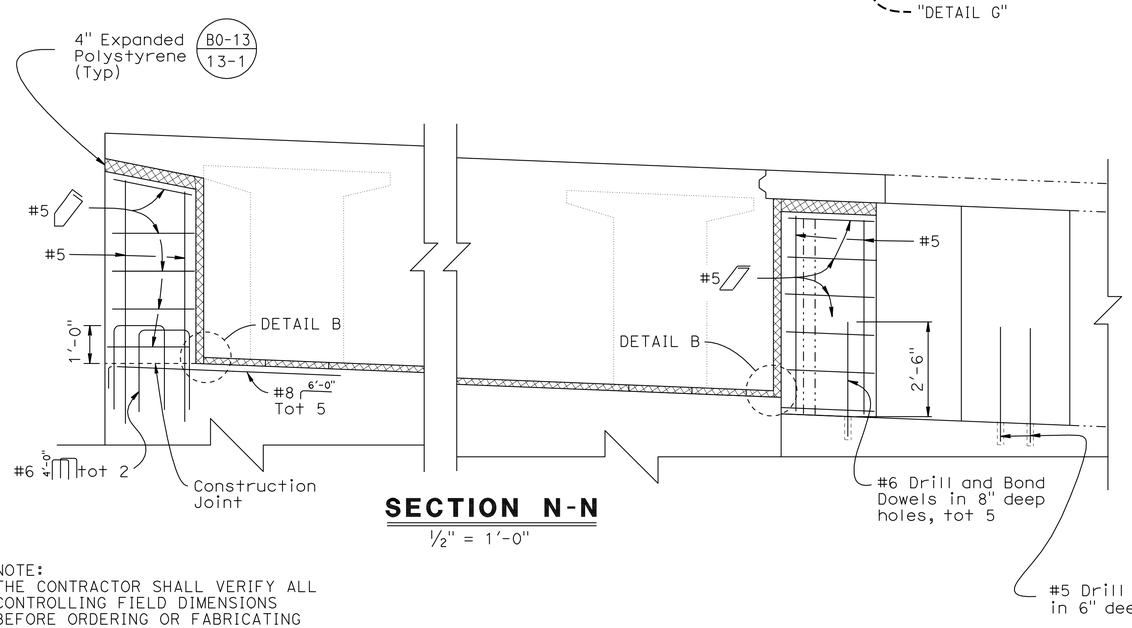

SECTION N-N

½" = 1'-0"

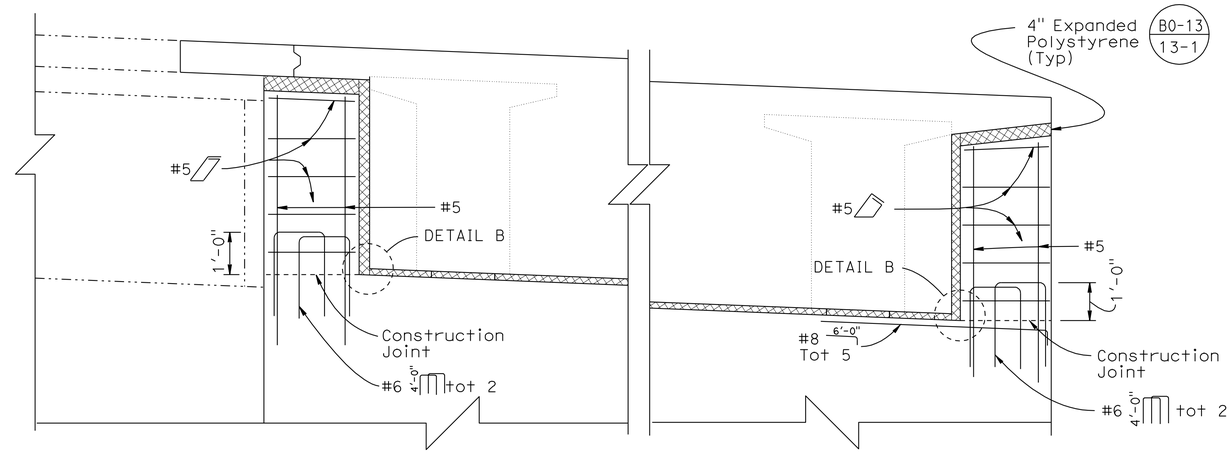

SECTION P-P

½" = 1'-0"

NOTE:
THE CONTRACTOR SHALL VERIFY ALL CONTROLLING FIELD DIMENSIONS BEFORE ORDERING OR FABRICATING ANY MATERIAL.

	BY	CHECKED
DESIGN	F. Chen	X
DETAILS	Y.Tang	X
QUANTITIES	X	X

STATE OF CALIFORNIA
DEPARTMENT OF TRANSPORTATION

DIVISION OF ENGINEERING SERVICES
STRUCTURE DESIGN
DESIGN BRANCH 10

BRIDGE NO. 56-0356
POST MILE 18.40

CENTRAL AVENUE UC (WIDEN)
ABUTMENT DETAILS NO. 4

STRUCTURES DESIGN DETAIL SHEET (ENGLISH) (REV. 10/25/05)

ORIGINAL SCALE IN INCHES FOR REDUCED PLANS 0 1 2 3

CU 08
EA 448401

DISREGARD PRINTS BEARING EARLIER REVISION DATES

REVISION DATES: 03-11-09 04-28-09 8-06-09 10-7-09

SHEET 9 OF 26

FILE => 560356fadt4_09.dgn

USERNAME => trcarol DATE PLOTTED => 30-APR-2011 TIME PLOTTED => 12:58

DIST	COUNTY	ROUTE	POST MILES TOTAL PROJECT	SHEET No	TOTAL SHEETS
08	Riv	91	15.6/21.6	1717	2028

REGISTERED CIVIL ENGINEER 11-30-10 DATE

4-25-11
PLANS APPROVAL DATE

The State of California or its officers or agents shall not be responsible for the accuracy or completeness of electronic copies of this plan sheet.

REGISTERED PROFESSIONAL ENGINEER HUAN VU No. 60696 Exp. 12-31-10 CIVIL STATE OF CALIFORNIA

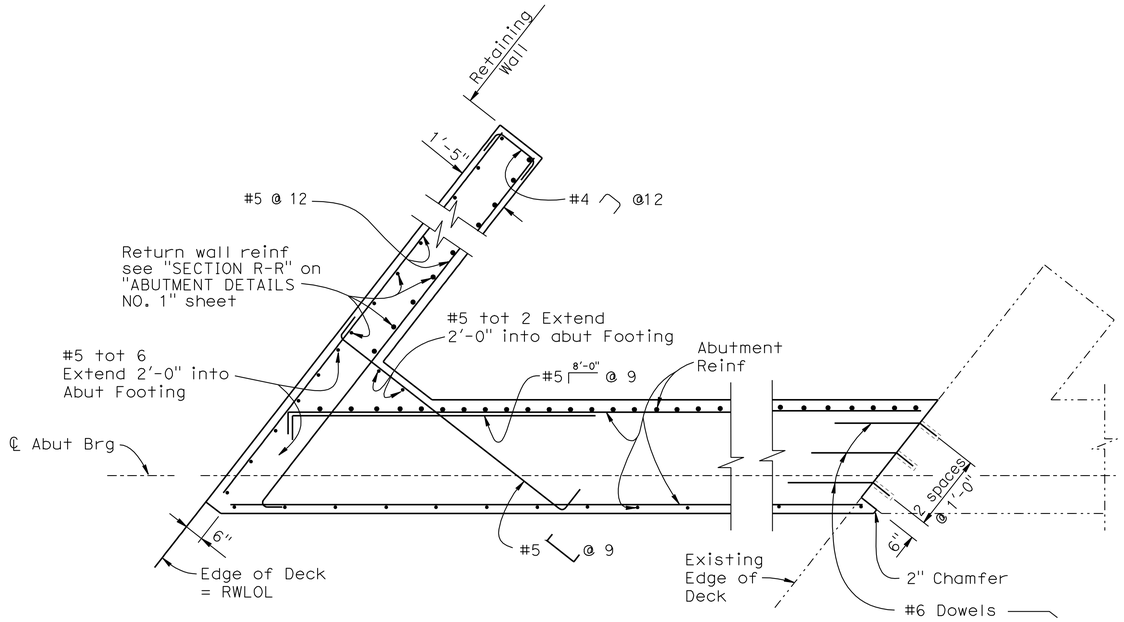

SECTION G-G

½" = 1'-0"

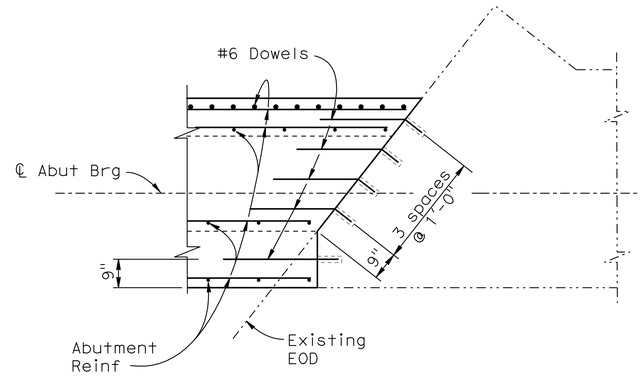

SECTION J-J

½" = 1'-0"

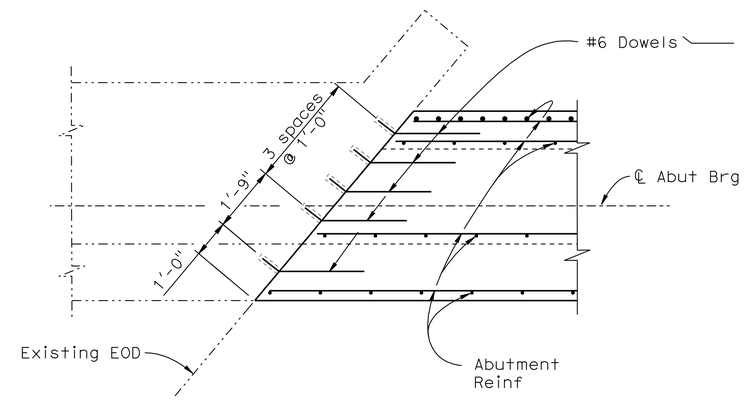

SECTION K-K

1/2 " = 1'-0"

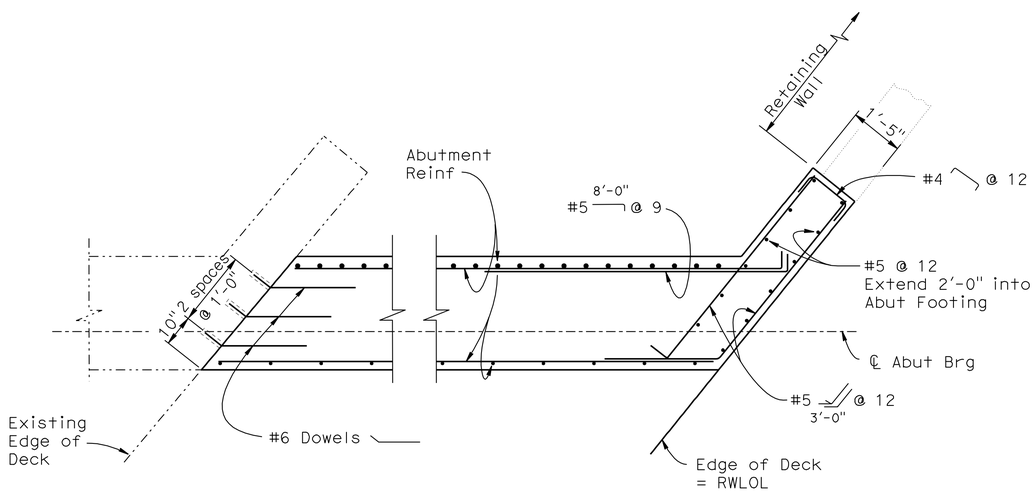

SECTION H-H

½" = 1'-0"

NOTES:

1. For location of "SECTION G-G and H-H, see "ABUTMENT NO. 1 LAYOUT" and "ABUTMENT NO. 2 LAYOUT" sheets.
2. For location of "SECTION J-J and K-K, see "ABUTMENT NO. 1 LAYOUT" and "ABUTMENT NO. 2 LAYOUT" sheets.

NOTE:
THE CONTRACTOR SHALL VERIFY ALL CONTROLLING FIELD DIMENSIONS BEFORE ORDERING OR FABRICATING ANY MATERIAL.

LEGEND

——— Indicates new construction

-·-·-·- Indicates existing structure

	BY	CHECKED
DESIGN	F. Chen	X M. Crete
DETAILS	R. Kirkland	X M. Crete
QUANTITIES	XF. Chen	X M. Crete

STATE OF CALIFORNIA
DEPARTMENT OF TRANSPORTATION

DIVISION OF ENGINEERING SERVICES
STRUCTURE DESIGN
DESIGN BRANCH 10

BRIDGE NO. 56-0356
POST MILE 18.40

CENTRAL AVENUE UC (WIDEN)
ABUTMENT DETAILS NO. 5

STRUCTURES DESIGN DETAIL SHEET (ENGLISH) (REV. 10/25/05)

ORIGINAL SCALE IN INCHES FOR REDUCED PLANS 0 1 2 3

CU 08
EA 448401

DISREGARD PRINTS BEARING EARLIER REVISION DATES

REVISION DATES: 8-11-09 4-11-10

SHEET 10 OF 26

FILE => 560356fadt5_10.dgn

USERNAME => trcarol DATE PLOTTED => 30-APR-2011 TIME PLOTTED => 12:53

DIST	COUNTY	ROUTE	POST MILES TOTAL PROJECT	SHEET No	TOTAL SHEETS
08	Riv	91	15.6/21.6	1718	2028

REGISTERED CIVIL ENGINEER 11-30-10 DATE

4-25-11
PLANS APPROVAL DATE

REGISTERED PROFESSIONAL ENGINEER HUAN VU No. 60696 Exp. 12-31-10 CIVIL STATE OF CALIFORNIA

The State of California or its officers or agents shall not be responsible for the accuracy or completeness of electronic copies of this plan sheet.

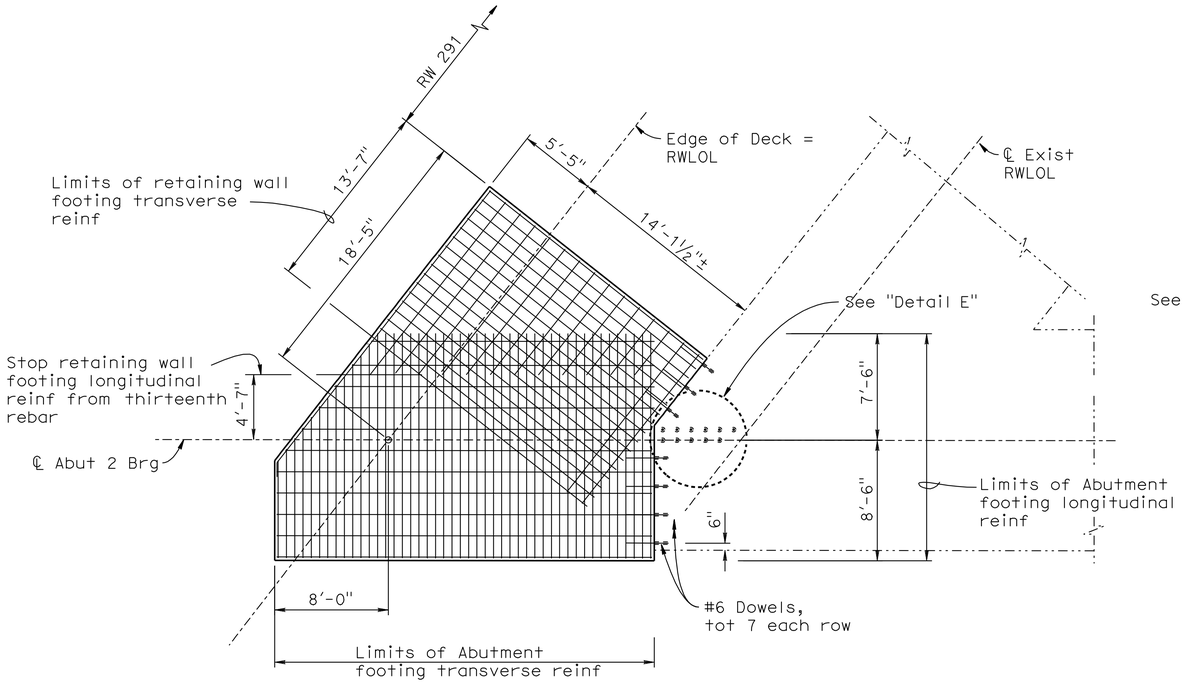

ABUTMENT 2 LEFT FOOTING DETAIL

3/16" = 1'-0"

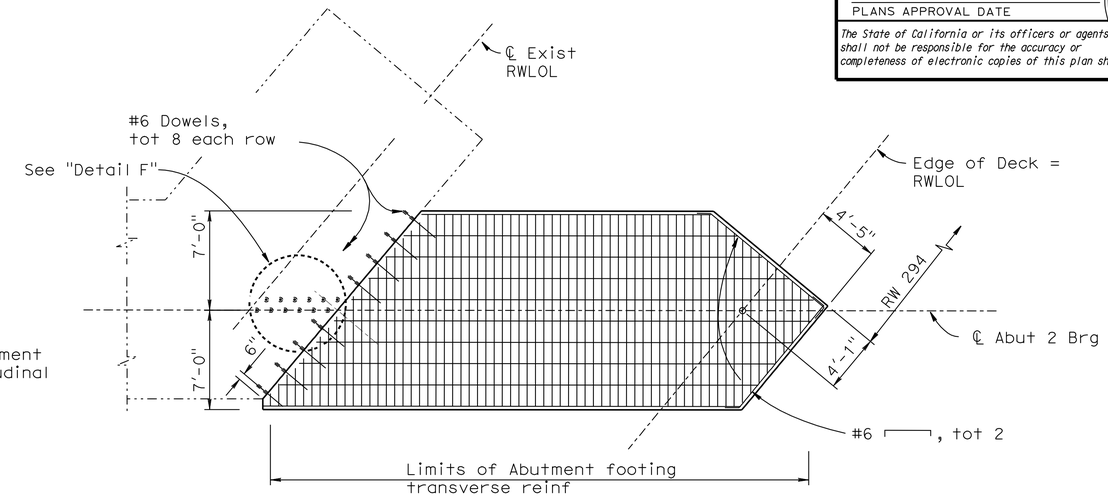

ABUTMENT 2 RIGHT FOOTING DETAIL

3/16" = 1'-0"

NOTE:
For DETAIL C, D, E, and F", see "ABUTMENT DETAILS NO. 7" sheet.

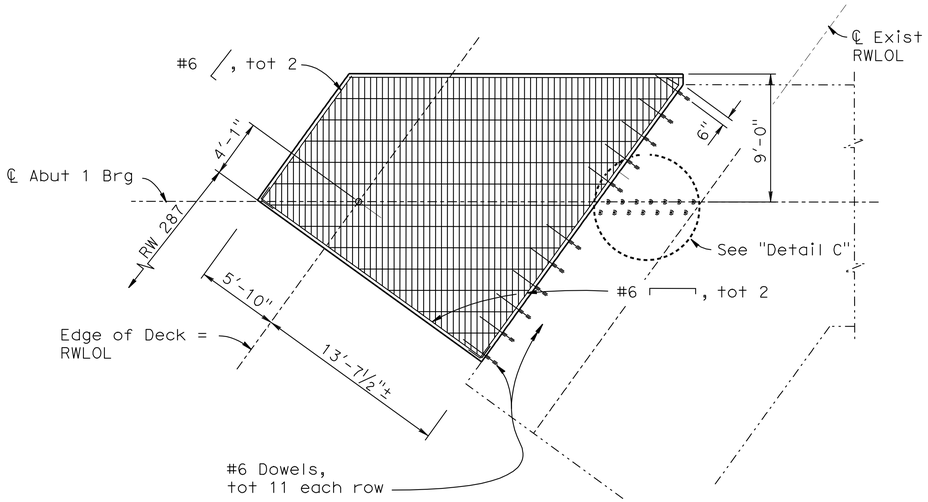

ABUTMENT 1 LEFT FOOTING DETAIL

3/16" = 1'-0"

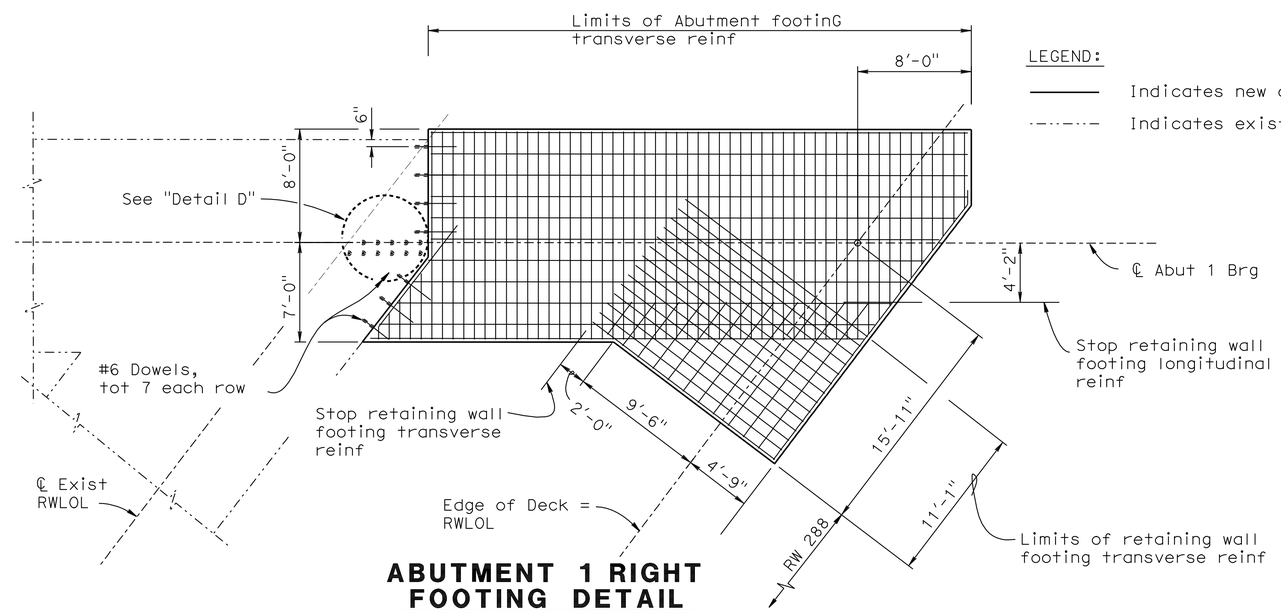

LEGEND:

——— Indicates new construction

-·-·-·- Indicates existing structure

ABUTMENT 1 RIGHT FOOTING DETAIL

3/16" = 1'-0"

NOTE:
THE CONTRACTOR SHALL VERIFY ALL CONTROLLING FIELD DIMENSIONS BEFORE ORDERING OR FABRICATING ANY MATERIAL.

	BY	CHECKED
DESIGN	F. Chen	M. Crete
DETAILS	R. Kirkland	M. Crete
QUANTITIES	F. Chen	M. Crete

STATE OF CALIFORNIA
DEPARTMENT OF TRANSPORTATION

DIVISION OF ENGINEERING SERVICES
STRUCTURE DESIGN
DESIGN BRANCH 10

BRIDGE NO. 56-0356
POST MILE 18.40

CENTRAL AVENUE UC (WIDEN)
ABUTMENT DETAILS NO. 6

STRUCTURES DESIGN DETAIL SHEET (ENGLISH) (REV. 10/25/05)

ORIGINAL SCALE IN INCHES FOR REDUCED PLANS 0 1 2 3

CU 08
EA 448401

DISREGARD PRINTS BEARING EARLIER REVISION DATES

REVISION DATES: 1-11-10 4-08-10

SHEET 11 OF 26

FILE => 560356fadt6_11.dgn

USERNAME => trcarol DATE PLOTTED => 30-APR-2011 TIME PLOTTED => 12:59

DIST	COUNTY	ROUTE	POST MILES TOTAL PROJECT	SHEET No	TOTAL SHEETS
08	Riv	91	15.6/21.6	1719	2028

REGISTERED CIVIL ENGINEER 11-30-10 DATE

4-25-11
PLANS APPROVAL DATE

REGISTERED PROFESSIONAL ENGINEER HUAN VU No. 60696 Exp. 12-31-10 CIVIL STATE OF CALIFORNIA

The State of California or its officers or agents shall not be responsible for the accuracy or completeness of electronic copies of this plan sheet.

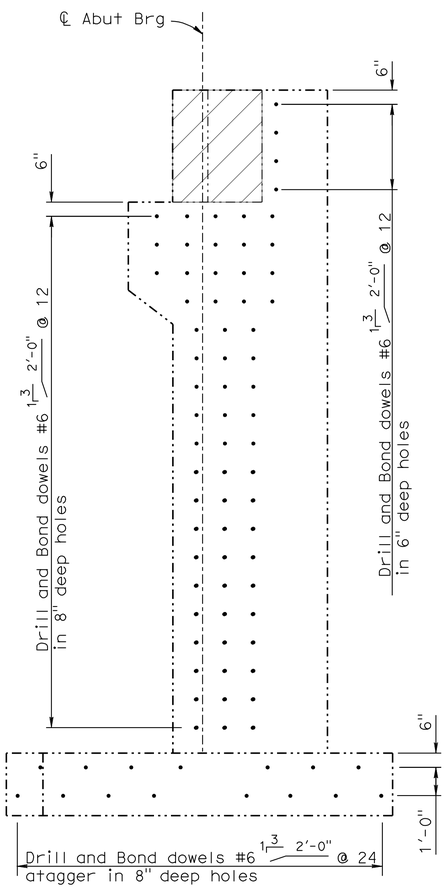

ELEVATION T-T

3/8" = 1'-0"

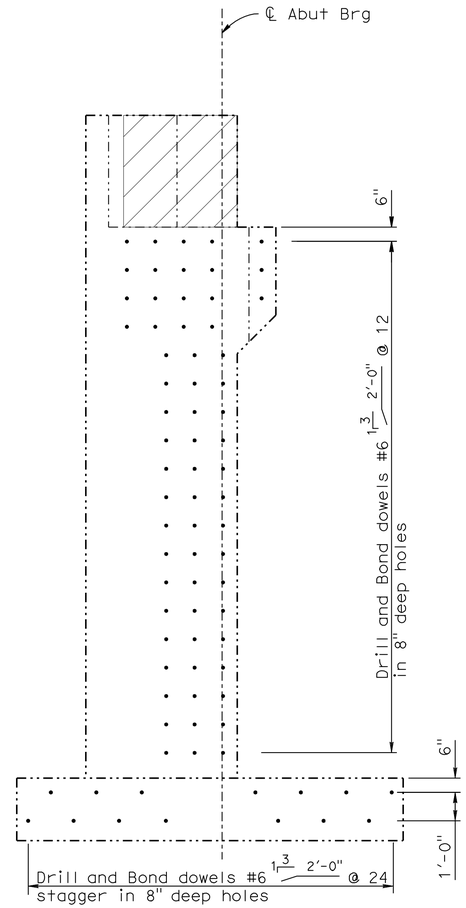

ELEVATION S-S

3/8" = 1'-0"

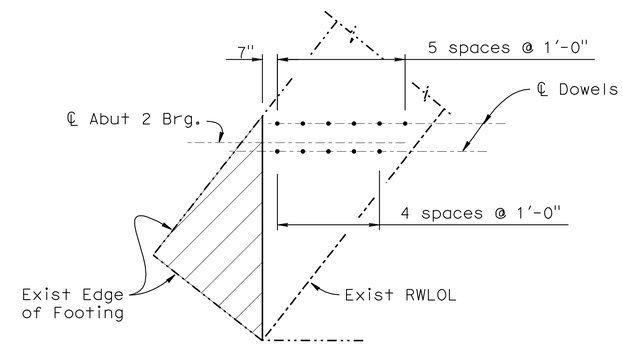

DETAIL - E

No Scale

Abutment 2 Left Footing

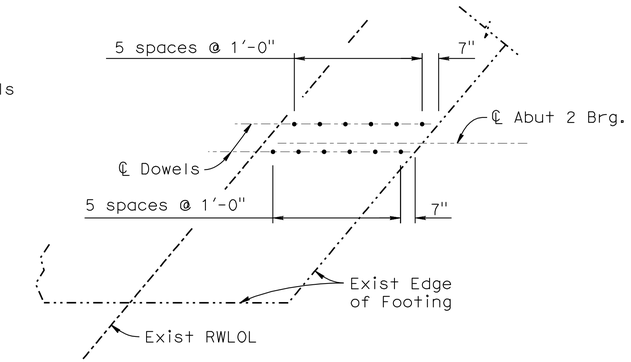

DETAIL - F

No Scale

Abutment 2 Right Footing

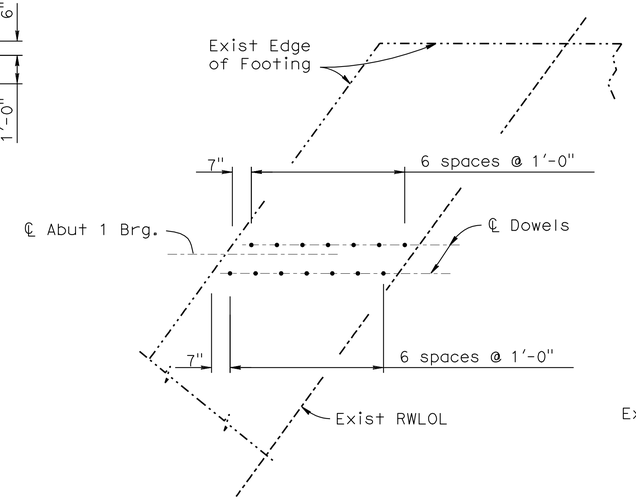

DETAIL - C

No Scale

Abutment 1 Left Footing

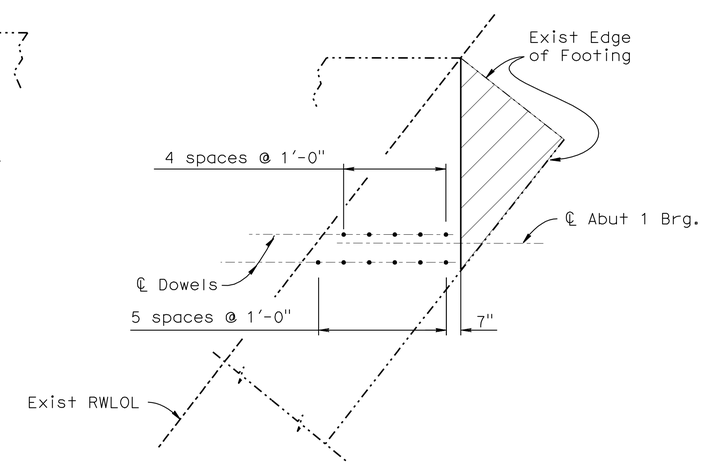

DETAIL - D

No Scale

Abutment 1 Right Footing

LEGEND:

-·-·-·-·- Indicates existing construction

• Indicates new Drill and Bond Dowels

Indicates Limits of Bridge removal (portion)

NOTE:
THE CONTRACTOR SHALL VERIFY ALL CONTROLLING FIELD DIMENSIONS BEFORE ORDERING OR FABRICATING ANY MATERIAL.

NOTE:
For location of "DETAIL C, D, E, and F", see "ABUTMENT DETAILS NO. 6" sheet.

	BY	CHECKED
DESIGN	F. Chen	M. Crete
DETAILS	R. Kirkland	M. Crete
QUANTITIES	F. Chen	M. Crete

STATE OF CALIFORNIA
DEPARTMENT OF TRANSPORTATION

DIVISION OF ENGINEERING SERVICES
STRUCTURE DESIGN
DESIGN BRANCH 10

BRIDGE NO. 56-0356
POST MILE 18.40

CENTRAL AVENUE UC (WIDEN)
ABUTMENT DETAILS NO. 7

STRUCTURES DESIGN DETAIL SHEET (ENGLISH) (REV. 10/25/05)

ORIGINAL SCALE IN INCHES FOR REDUCED PLANS 0 1 2 3

CU 08
EA 448401

DISREGARD PRINTS BEARING EARLIER REVISION DATES 3-24-10 4-08-10

REVISION DATES

SHEET 12 OF 26

FILE => 560356fadt7_12.dgn

USERNAME => trcarol DATE PLOTTED => 30-APR-2011 TIME PLOTTED => 12:59

DIST	COUNTY	ROUTE	POST MILES TOTAL PROJECT	SHEET No	TOTAL SHEETS
08	Riv	91	15.6/21.6	1720	2028

REGISTERED CIVIL ENGINEER 11-30-10 DATE

4-25-11
PLANS APPROVAL DATE

The State of California or its officers or agents shall not be responsible for the accuracy or completeness of electronic copies of this plan sheet.

REGISTERED PROFESSIONAL ENGINEER HUAN VU No. 60696 Exp. 12-31-10 CIVIL STATE OF CALIFORNIA

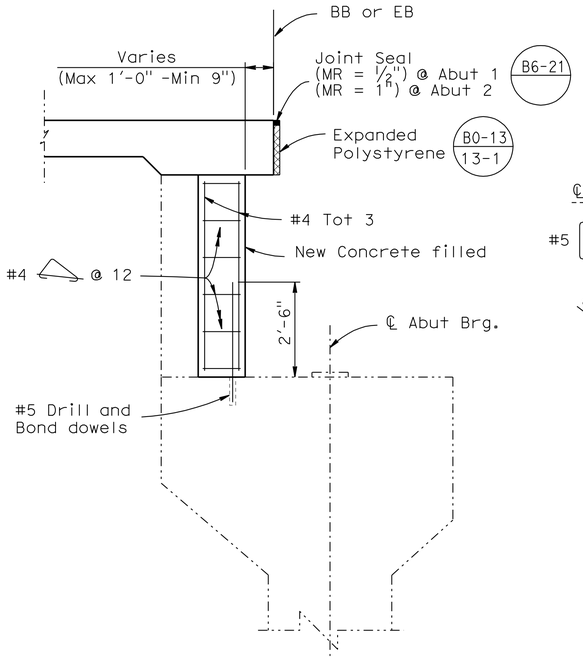

SECTION V-V

1/2" = 1'-0"

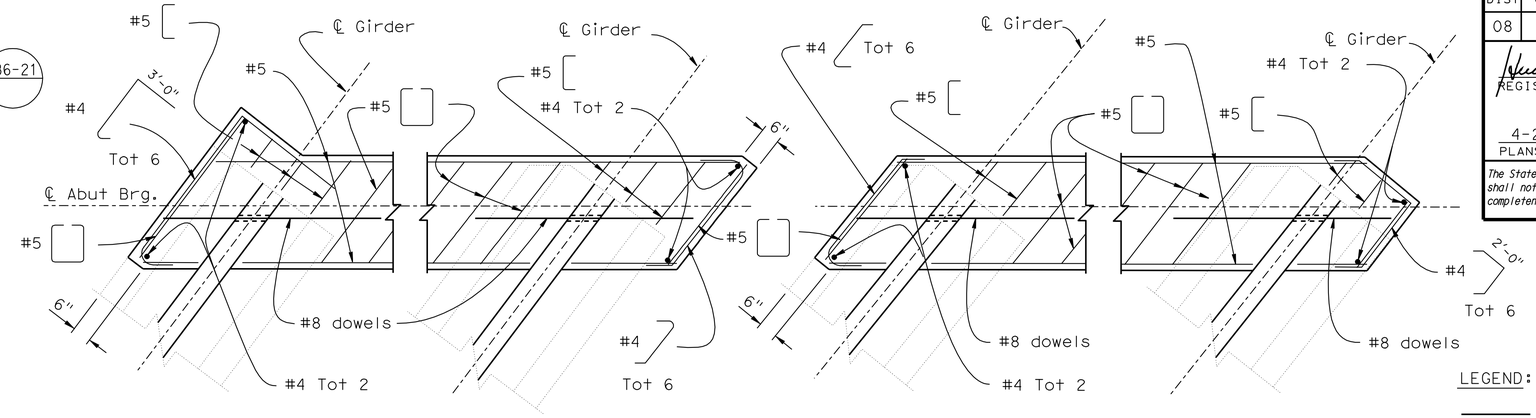

ABUT 2 LEFT SHOWN, ABUT 1 RIGHT SIMILAR

ABUT 2 RIGHT SHOWN, ABUT 1 LEFT SIMILAR

END DIAPHRAGM

1/2" = 1'-0"

LEGEND:

Indicates new construction

Indicates existing structure

Indicates limits of concrete removal

NOTE:

1. For locations of "DETAIL G" and "DETAIL H", see "ABUTMENT DETAILS NO.3" and "ABUTMENT DETAILS NO. 4"sheets

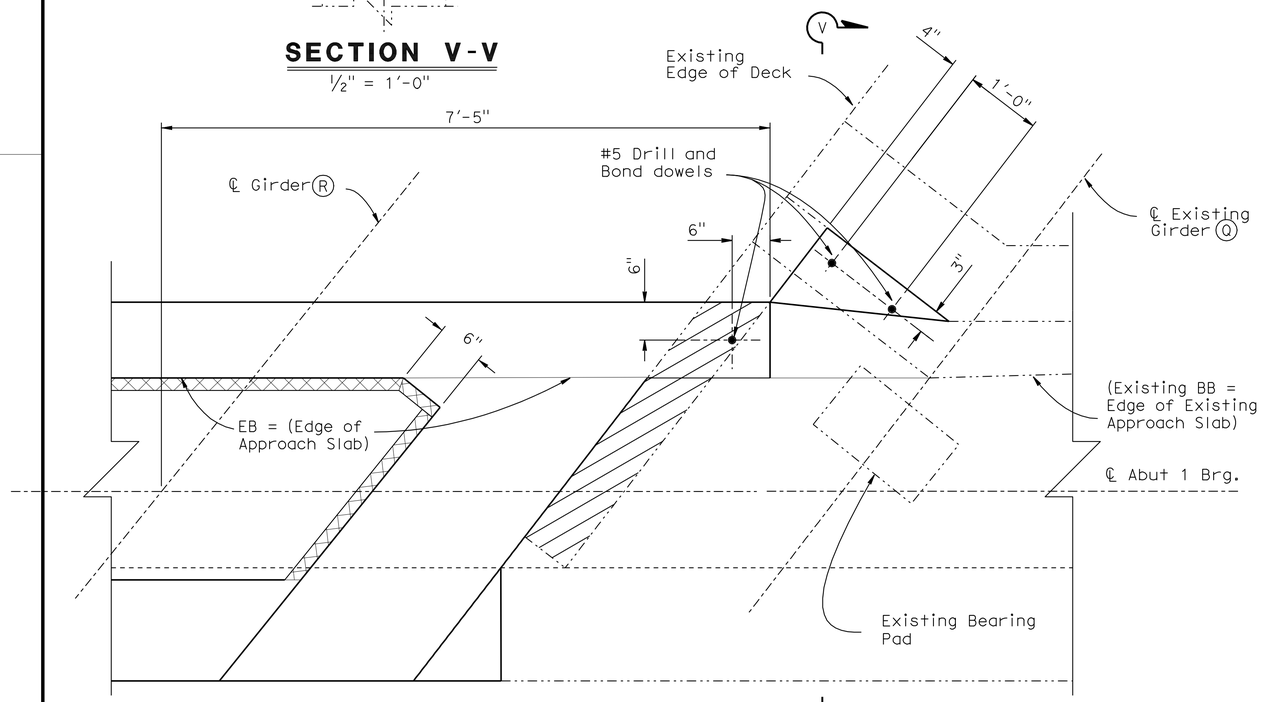

DETAIL H

1" = 1'-0"

(ABUT 1 RIGHT)

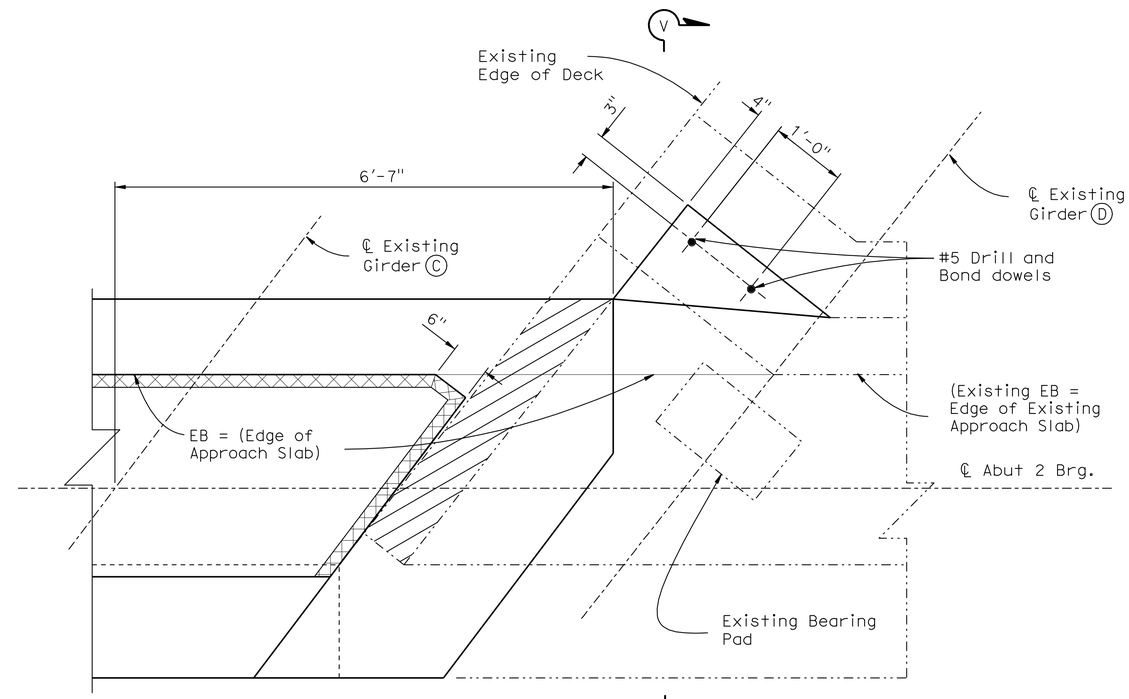

DETAIL G

1" = 1'-0"

(ABUT 2 LEFT)

NOTE:
THE CONTRACTOR SHALL VERIFY ALL CONTROLLING FIELD DIMENSIONS BEFORE ORDERING OR FABRICATING ANY MATERIAL.

	BY	CHECKED
DESIGN	F. Chen	M. Crete
DETAILS	R. Kirkland	M. Crete
QUANTITIES	F. Chen	M. Crete

STATE OF CALIFORNIA
DEPARTMENT OF TRANSPORTATION

DIVISION OF ENGINEERING SERVICES
STRUCTURE DESIGN
DESIGN BRANCH 10

BRIDGE NO. 56-0356
POST MILE 18.40

CENTRAL AVENUE UC (WIDEN)
ABUTMENT DETAILS NO. 8

STRUCTURES DESIGN DETAIL SHEET (ENGLISH) (REV. 10/25/05)

ORIGINAL SCALE IN INCHES FOR REDUCED PLANS 0 1 2 3

CU 08
EA 448401

DISREGARD PRINTS BEARING EARLIER REVISION DATES

REVISION DATES: 1/24/10 4-08-10

SHEET 13 OF 26

FILE => 560356fadt8_13.dgn

USERNAME => trcarol DATE PLOTTED => 30-APR-2011 TIME PLOTTED => 12:59

DIST	COUNTY	ROUTE	POST MILES TOTAL PROJECT	SHEET No	TOTAL SHEETS
08	Riv	91	15.6/21.6	1721	2028

REGISTERED CIVIL ENGINEER 11-30-10 DATE

4-25-11
PLANS APPROVAL DATE

REGISTERED PROFESSIONAL ENGINEER HUAN VU No. 60696 Exp. 12-31-10 CIVIL STATE OF CALIFORNIA

The State of California or its officers or agents shall not be responsible for the accuracy or completeness of electronic copies of this plan sheet.

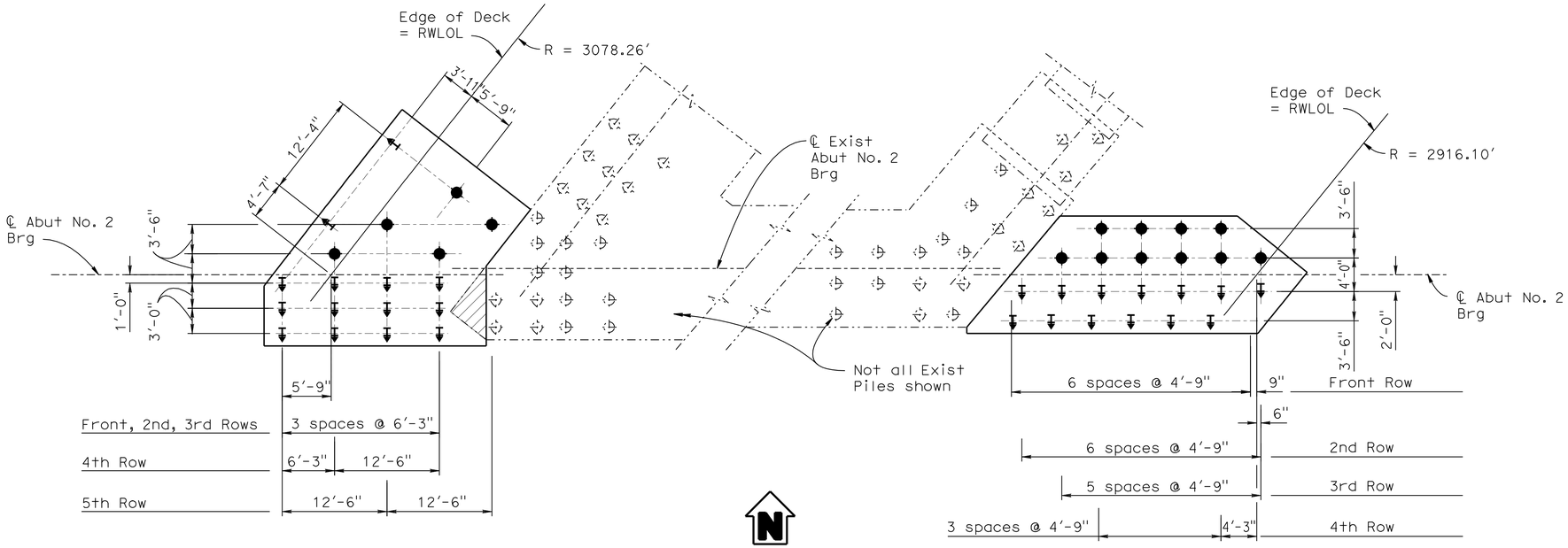

ABUTMENT NO. 2 PILE LAYOUT

1/8" = 1'-0"

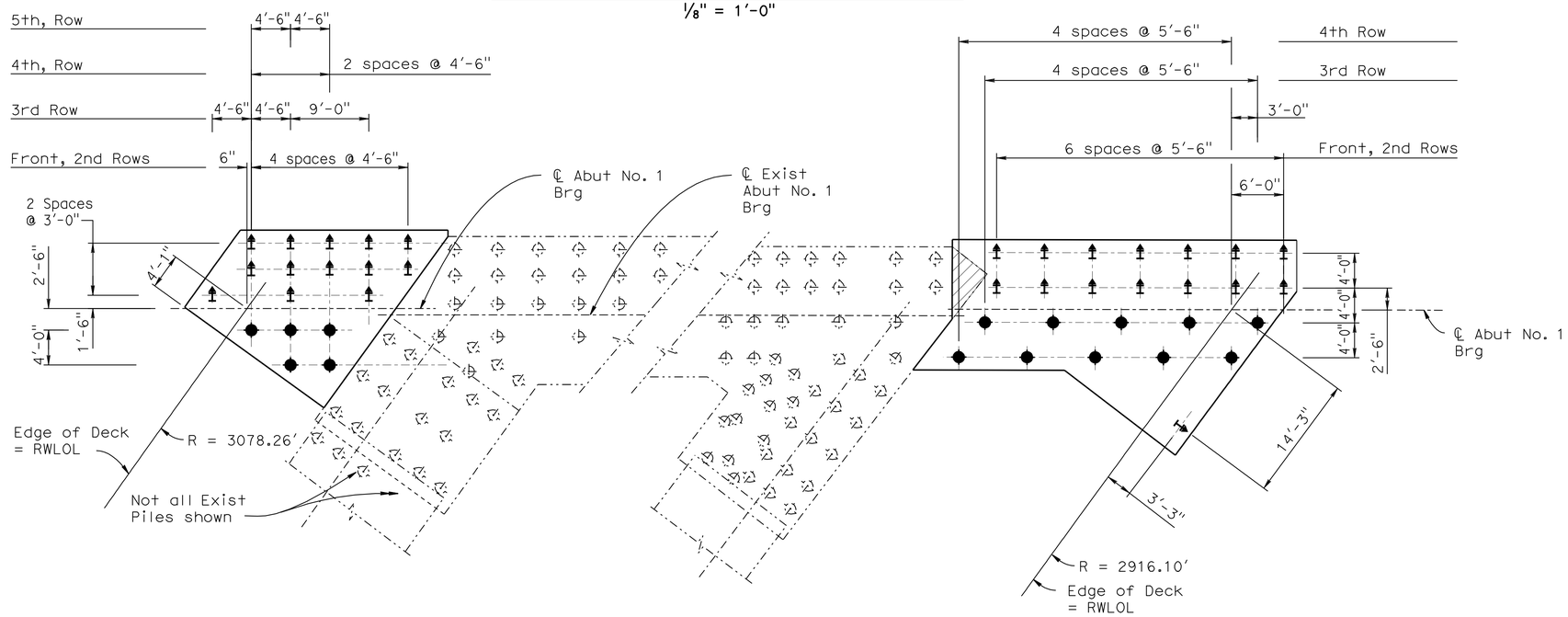

ABUTMENT NO. 1 PILE LAYOUT

1/8" = 1'-0"

LEGEND:

- Denotes Existing Piles
- Denotes New Battered Pile 3:1
- Denotes New Vertical Pile
- Denotes Existing Structure
- Denotes New Construction
- Denotes limits of concrete removal

NOTE:
THE CONTRACTOR SHALL VERIFY ALL CONTROLLING FIELD DIMENSIONS BEFORE ORDERING OR FABRICATING ANY MATERIAL.

	BY	CHECKED
DESIGN	F. Chen	M. Crete
DETAILS	R. Kirkland	M. Crete
QUANTITIES	F. Chen	M. Crete

STATE OF CALIFORNIA
DEPARTMENT OF TRANSPORTATION

DIVISION OF ENGINEERING SERVICES
STRUCTURE DESIGN
DESIGN BRANCH 10

BRIDGE NO. 56-0356
POST MILE 18.40

CENTRAL AVENUE UC (WIDEN)
ABUTMENT FOOTING PILES LAYOUT

STRUCTURES DESIGN DETAIL SHEET (ENGLISH) (REV. 10/25/05)

ORIGINAL SCALE IN INCHES FOR REDUCED PLANS 0 1 2 3

CU 08
EA 448401

DISREGARD PRINTS BEARING EARLIER REVISION DATES 2/05/09 8/11/09

REVISION DATES

SHEET 14 OF 26

FILE => 560356fafp_lo14.dgn

USERNAME => trlim DATE PLOTTED => 30-APR-2011 TIME PLOTTED => 14:42

DIST	COUNTY	ROUTE	POST MILES TOTAL PROJECT	SHEET No	TOTAL SHEETS
08	Riv	91	15.6/21.6	1722	2028

REGISTERED CIVIL ENGINEER 11-30-10 DATE

4-25-11
PLANS APPROVAL DATE

The State of California or its officers or agents shall not be responsible for the accuracy or completeness of electronic copies of this plan sheet.

REGISTERED PROFESSIONAL ENGINEER HUAN VU No. 60696 Exp. 12-31-10 CIVIL STATE OF CALIFORNIA

NOTE:

1. Portion of curtain wall and backwall to be removed to seat level. Vertical reinforcement to remain.
2. Portion of existing Approach Slab to be removed, reinforcement to remain.

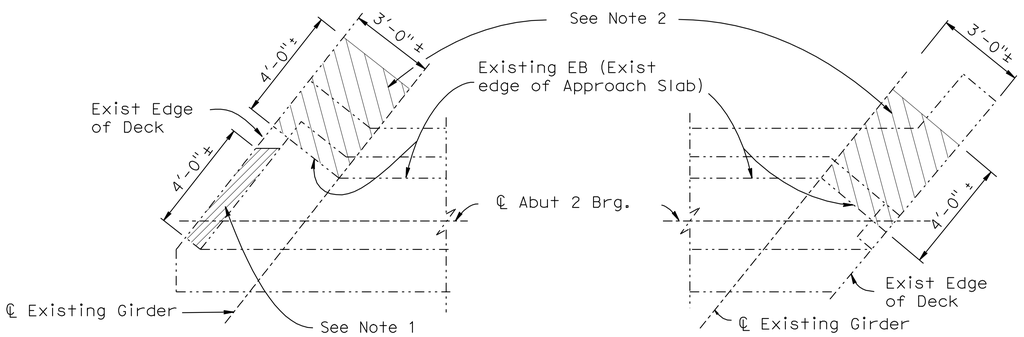

EXISTING ABUT 2 LEFT

3/8" = 1'-0"

EXISTING ABUT 2 RIGHT

3/8" = 1'-0"

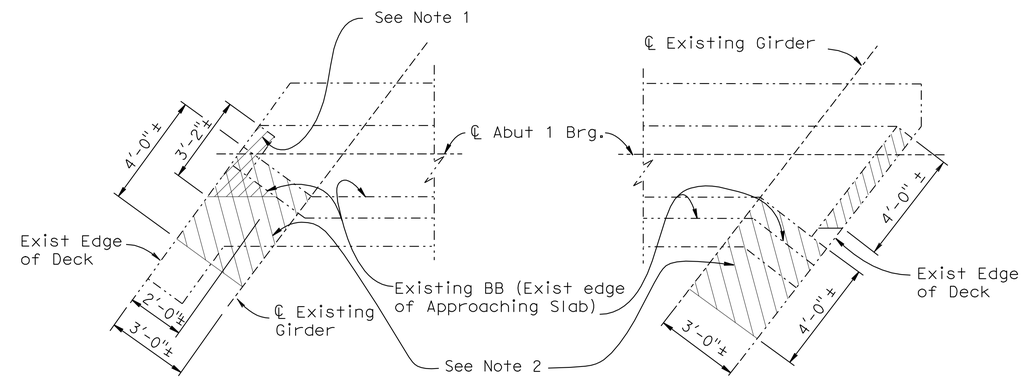

EXISTING ABUT 1 LEFT

3/8" = 1'-0"

EXISTING ABUT 1 RIGHT

3/8" = 1'-0"

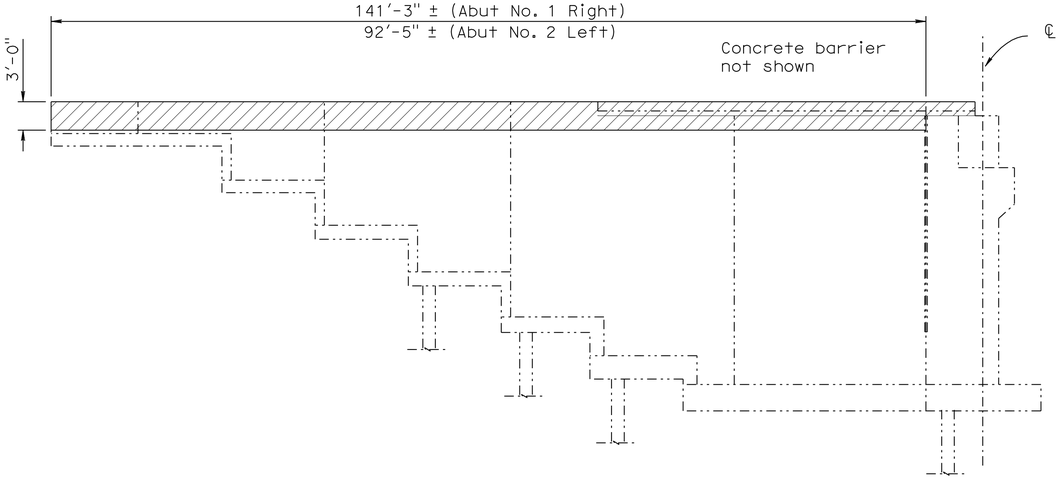

WINGWALL REMOVAL
EXISTING ABUT NO. 1 RIGHT & ABUT NO. 2 LEFT

1/8" = 1'-0"

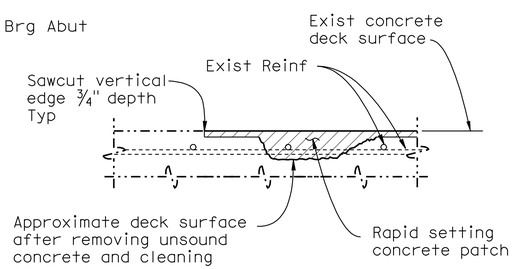

DECK REPAIR DETAIL

No Scale

NOTES:

1. Approximate damaged area is 0.1% of treated area.
2. Location will be determined by the engineer.
3. Reinforcement may be encountered during deck concrete removal and is to remain undamaged.

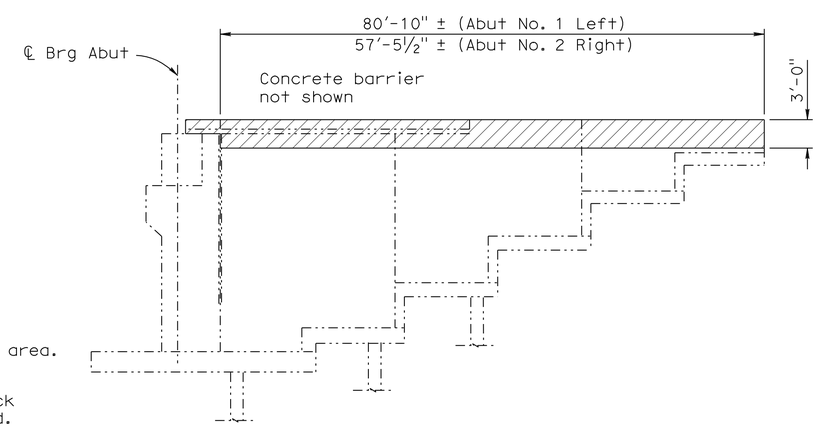

WINGWALL REMOVAL
EXISTING ABUT NO. 1 LEFT & ABUT NO. 2 RIGHT

1/8" = 1'-0"

NOTE:
THE CONTRACTOR SHALL VERIFY ALL CONTROLLING FIELD DIMENSIONS BEFORE ORDERING OR FABRICATING ANY MATERIAL.

LEGEND:

Indicates existing construction

Indicates limits of Bridge removal (Portion)

DESIGN	BY F. Chen	CHECKED M. Crete	
DETAILS	BY R. Kirkland	CHECKED M. Crete	
QUANTITIES	BY F. Chen	CHECKED M. Crete	

STATE OF CALIFORNIA
DEPARTMENT OF TRANSPORTATION

DIVISION OF ENGINEERING SERVICES
STRUCTURE DESIGN
DESIGN BRANCH 10

BRIDGE NO. 56-0356
POST MILE 18.40

CENTRAL AVENUE UC (WIDEN)
CONCRETE REMOVAL

STRUCTURES DESIGN DETAIL SHEET (ENGLISH) (REV. 10/25/05)

ORIGINAL SCALE IN INCHES FOR REDUCED PLANS 0 1 2 3

CU 08
EA 448401

DISREGARD PRINTS BEARING EARLIER REVISION DATES

REVISION DATES: 11-18-10 10-05-10

SHEET 15 OF 26

FILE => 560356fcr15.dgn

USERNAME => trrlim DATE PLOTTED => 30-APR-2011 TIME PLOTTED => 14:42

DIST	COUNTY	ROUTE	POST MILES TOTAL PROJECT	SHEET No	TOTAL SHEETS
08	Riv	91	15.6/21.6	1723	2028

REGISTERED CIVIL ENGINEER 11-30-10 DATE

4-25-11
PLANS APPROVAL DATE

REGISTERED PROFESSIONAL ENGINEER HUAN VU No. 60696 Exp. 12-31-10 CIVIL STATE OF CALIFORNIA

The State of California or its officers or agents shall not be responsible for the accuracy or completeness of electronic copies of this plan sheet.

Legend:

Indicates new construction

Indicates existing structure

Indicates limits of Bridge removal (Portion)

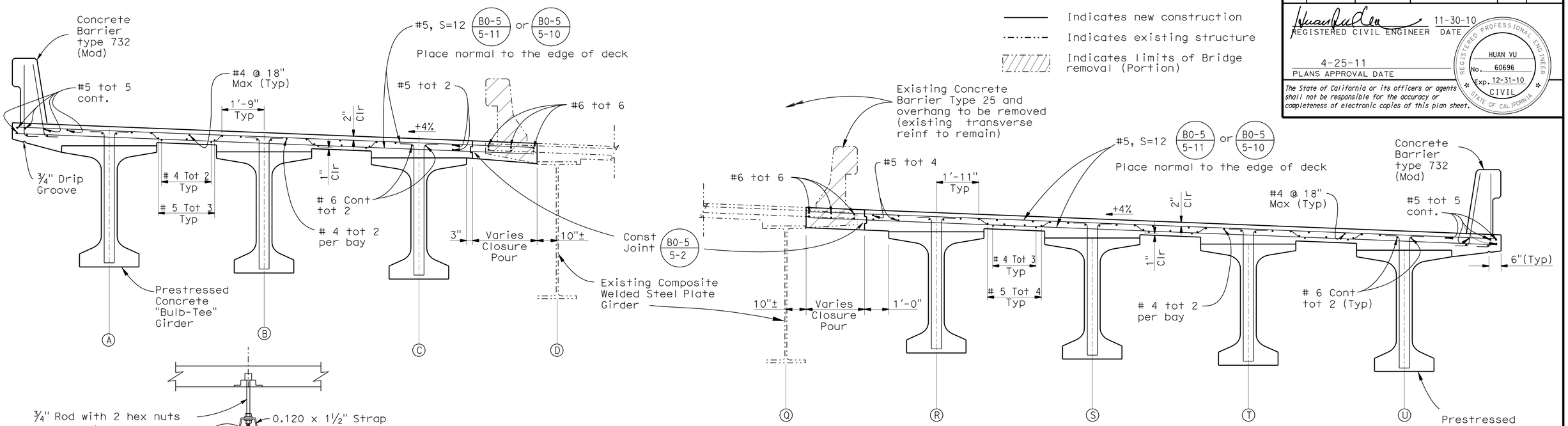

PART TYPICAL SECTION

1/2"=1'-0"

CONDUIT HANGER SUPPORT DETAIL

NO SCALE

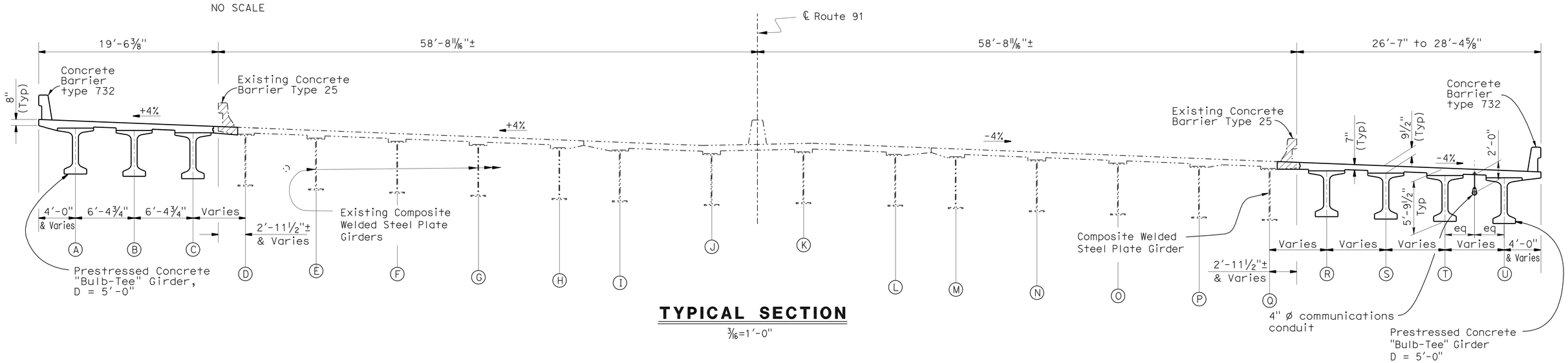

TYPICAL SECTION

3/16=1'-0"

DESIGN	BY F.Chen	CHECKED M. Crete	
DETAILS	BY D.Wooten/Y. Tang	CHECKED M. Crete	
QUANTITIES	BY F. Chen	CHECKED M. Crete	

STATE OF CALIFORNIA
DEPARTMENT OF TRANSPORTATION

DIVISION OF ENGINEERING SERVICES
STRUCTURE DESIGN
DESIGN BRANCH 10

BRIDGE NO. 56-0356
POST MILE 18.40

CENTRAL AVENUE UC (WIDEN)

TYPICAL SECTION

STRUCTURES DESIGN DETAIL SHEET (ENGLISH) (REV. 10/25/05)

ORIGINAL SCALE IN INCHES FOR REDUCED PLANS 0 1 2 3

CU 08
EA 448401

DISREGARD PRINTS BEARING EARLIER REVISION DATES

REVISION DATES: 06-10-09 07-22-09 2-08-10 4-08-10 7-09-10

SHEET 16 OF 26

FILE => 560356kts16.dgn

USERNAME => trlim DATE PLOTTED => 30-APR-2011 TIME PLOTTED => 14:42

DIST	COUNTY	ROUTE	POST MILES TOTAL PROJECT	SHEET No	TOTAL SHEETS
08	Riv	91	15.6/21.6	1724	2028

REGISTERED CIVIL ENGINEER 11-30-10 DATE

4-25-11
PLANS APPROVAL DATE

REGISTERED PROFESSIONAL ENGINEER HUAN VU No. 60696 Exp. 12-31-10 CIVIL STATE OF CALIFORNIA

The State of California or its officers or agents shall not be responsible for the accuracy or completeness of electronic copies of this plan sheet.

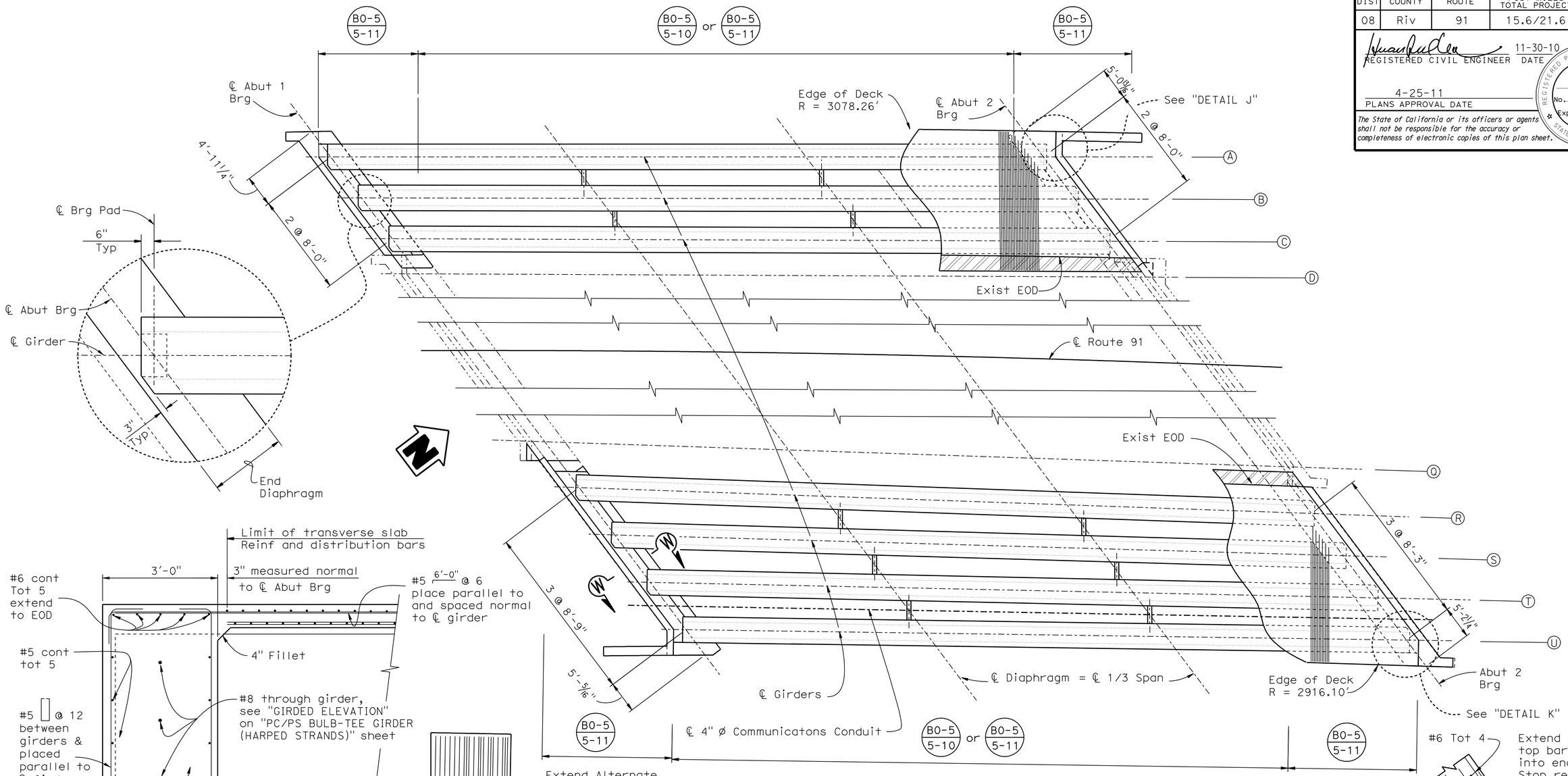

PLAN
1/8" = 1'-0"

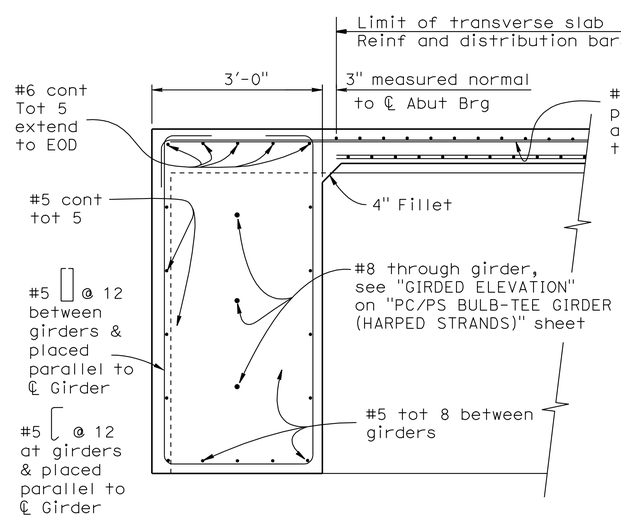

SECTION W-W
3/4" = 1'-0"

NOTE:
THE CONTRACTOR SHALL VERIFY ALL CONTROLLING FIELD DIMENSIONS BEFORE ORDERING OR FABRICATING ANY MATERIAL.

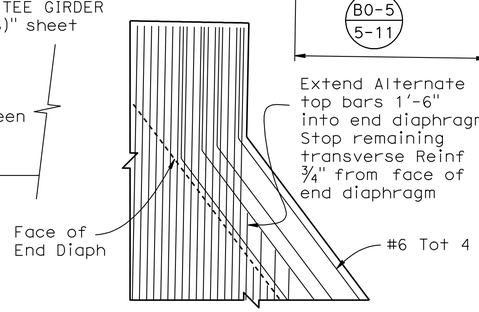

DETAIL "J"
3/8" = 1'-0"

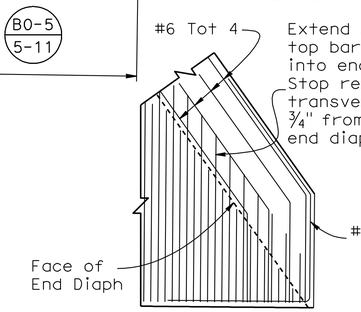

DETAIL "K"
3/8" = 1'-0"

LEGEND:

- Indicates new construction
- Indicates existing structure
- Indicates closure pour

DESIGN	BY F. Chen	CHECKED M. Crete	
DETAILS	BY R. Kirkland/Y. Tang	CHECKED M. Crete	
QUANTITIES	BY F. Chen	CHECKED M. Crete	

STATE OF CALIFORNIA
DEPARTMENT OF TRANSPORTATION

DIVISION OF ENGINEERING SERVICES
STRUCTURE DESIGN
DESIGN BRANCH 10

BRIDGE NO. 56-0356
POST MILE 18.40

CENTRAL AVENUE UC (WIDEN)
GIRDER LAYOUT

STRUCTURES DESIGN DETAIL SHEET (ENGLISH) (REV. 10/25/05)

ORIGINAL SCALE IN INCHES FOR REDUCED PLANS 0 1 2 3

CU 08
EA 448401

DISREGARD PRINTS BEARING EARLIER REVISION DATES

REVISION DATES: 06-15-09 4-12-10

SHEET 17 OF 26

FILE => 5603561g_io17.dgn

USERNAME => tr11m DATE PLOTTED => 30-APR-2011 TIME PLOTTED => 14:43

DIST.	COUNTY	ROUTE	POST MILES TOTAL PROJECT	SHEET NO.	TOTAL SHEETS
08	Riv	91	15.6/21.6	1725	2028

REGISTERED ENGINEER - CIVIL 11-30-10

4-25-11
PLANS APPROVAL DATE

REGISTERED PROFESSIONAL ENGINEER HUAN VU No. 60696 Exp. 12-31-10 CIVIL STATE OF CALIFORNIA

The State of California or its officers or agents shall not be responsible for the accuracy or completeness of electronic copies of this plan sheet.

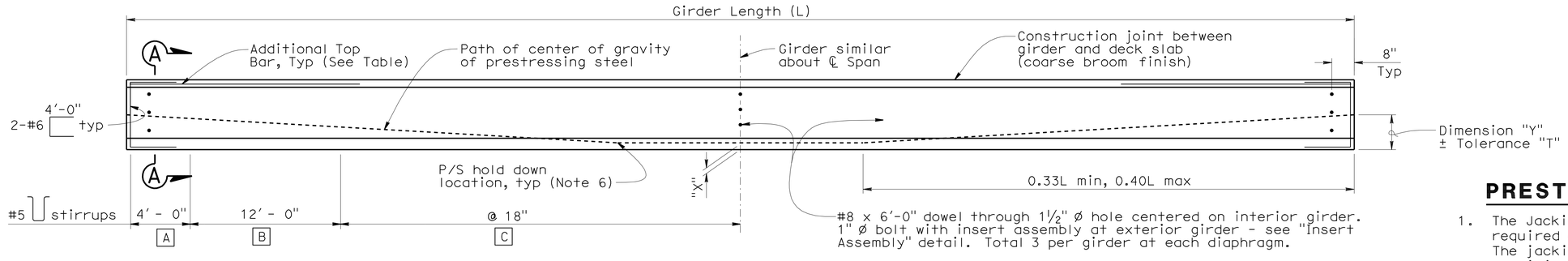

GIRDER ELEVATION

Location	A	B	C
Girder A, B, C	#5 @ 6"	#5 @ 12"	#5 @ 18"
Girder R, S, T, U	#5 @ 6"	#5 @ 12"	#5 @ 18"

Note

Girder ends to be cast such that a level surface is provided at bearing pads.

1

Location Location	Girder Length (ft)	"D" (ft)	"X" (in)	Jacking Force (P) (kips)	"Y" (in)	"T" (in)	Concrete Strength (ksi) f'ci	Concrete Strength (ksi) f'c	Midspan Dead Load Deflection (in) Deck	Midspan Dead Load Deflection (in) Rail	Additional Top Bar (each end)
Girder A, B, C	112.480	5	4	1100	20.0	±3	5.0	5.5	2.23	0.54	N/A
			6	1170							
Girder R	115.640	5	4	1530	20.0	±3	5.0	5.5	2.85	0.58	N/A
			6	1600							
Girder S	115.325	5	4	1530	20.0	±3	5.0	5.5	2.85	0.58	N/A
			6	1600							
Girder T	115.013	5	4	1530	20.0	±3	5.0	5.5	2.85	0.58	N/A
			6	1600							
Girder U	114.702	5	4	1430	20.0	±3	5.0	5.5	2.76	0.56	N/A
			6	1500							

PRESTRESSING NOTES

1. The Jacking Force (P) is the jacking force required at the point of control along the span. The jacking force does not include any fabrication specific losses.
2. The maximum tensile stress in the prestressing steel upon release shall not exceed 75% of the specified minimum ultimate tensile strength of the prestressing steel.
3. The maximum temporary tensile stress (jacking stress) in the prestressing steel shall not exceed 80% of the specified minimum ultimate tensile strength of the prestressing steel.
4. Concrete strength:
   f'ci is at time of initial stressing.
   f'c is at 28 days.
5. Deflection components are informational and will be used to set screed line elevations.
6. Screed line elevations for deck concrete will be determined by the Engineer.
7. Contractor may interpolate "P" and "X" values between the limits shown, as approved by the Engineer.
8. There shall be a minimum of two hold downs per girder for the prestressing.
9. Prestressing strand shall be 270 ksi low relaxation.

2

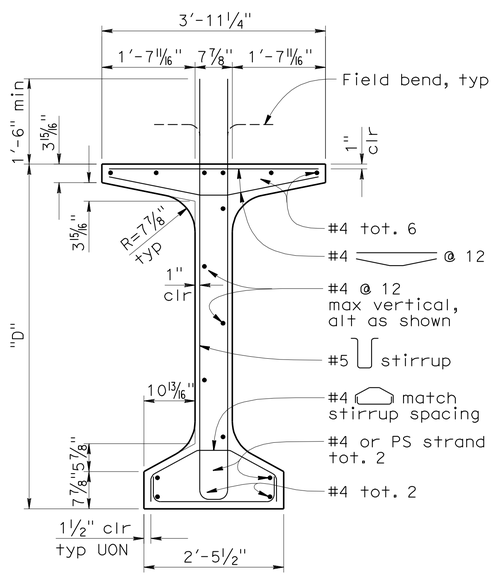

TYPICAL GIRDER SECTION

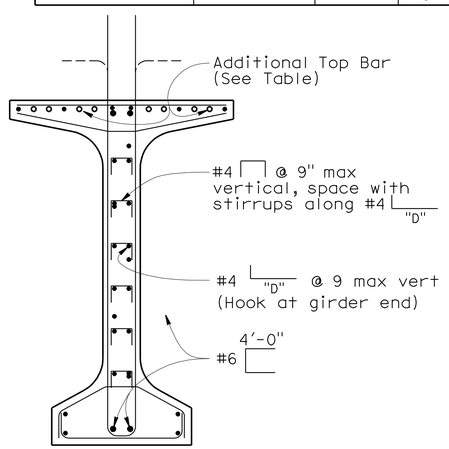

Note: For details shown but not noted, see "Typical Girder Section" detail.

SECTION A-A

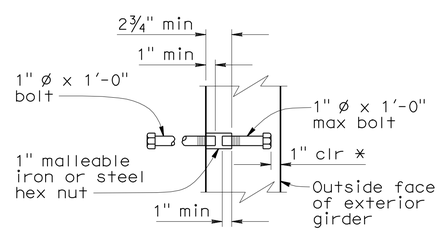

* Dimension may be increased when insert assembly is used at end block

INSERT ASSEMBLY

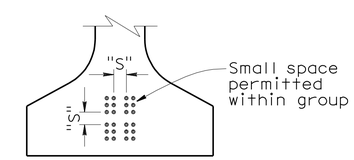

CLEARANCES FOR PRETENSIONED STRANDS

NOTES

1. Strands may be bundled in groups consisting of 3 vertically, 2 horizontally, and separated at the ends.
2. The minimum distance "S" between groups or individual strands is 1¾" for 0.5" ø strand and 2" for 0.6" ø strand.
3. "S" is measured between centers of adjacent strands.
4. Approval by Engineer is required for deviation.

Note: For "WELDED WIRE REINFORCEMENT (WWR) ALTERNATIVE, see "PC/PS BULB-TEE GIRDER (MISCELLANEOUS DETAILS" sheet.

NO SCALE

STANDARD DRAWING

FILE NO. xs1-122-1

APPROVED BY Jim Ma — RESPONSIBLE TECHNICAL SPECIALIST
APPROVAL DATE 01-03-11

RELEASED BY Susan Hida — RESPONSIBLE OFFICE CHIEF
RELEASE DATE 01-03-11

1 Revised chart
2 Revised Prestessing Notes

STATE OF CALIFORNIA DEPARTMENT OF TRANSPORTATION

DIVISION OF ENGINEERING SERVICES

CU 08
EA 448401

BRIDGE NO. 56-0356
POST MILE 18.40

CENTRAL AVENUE UC (WIDEN)

PC/PS BULB-TEE GIRDER (HARPED STRANDS)

DS OSD 2147A (ENGLISH STANDARD DRAWING "XS" BORDER REV. 01/11/08)

ORIGINAL SCALE IN INCHES FOR REDUCED PLANS 0 1 2 3

DISREGARD PRINTS BEARING EARLIER REVISION DATES

REVISION DATES (PRELIMINARY STAGE ONLY) 12/22/08 05/11/09 06/19/09 7-13-10

SHEET 18 OF 26

USERNAME => trlim

560356lgdt18.dgn

DATE PLOTTED => 30-APR-2011 TIME PLOTTED => 14:43

DIST.	COUNTY	ROUTE	POST MILES TOTAL PROJECT	SHEET NO.	TOTAL SHEETS
08	Riv	91	15.6/21.6	1726	2028

REGISTERED ENGINEER - CIVIL 11-30-10

4-25-11
PLANS APPROVAL DATE

REGISTERED PROFESSIONAL ENGINEER HUAN VU No. 60696 Exp. 12-31-10 CIVIL STATE OF CALIFORNIA

The State of California or its officers or agents shall not be responsible for the accuracy or completeness of electronic copies of this plan sheet.

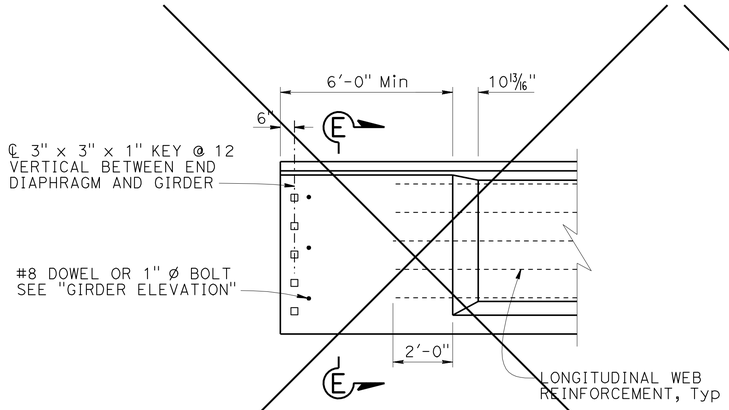

2 OPTIONAL END BLOCK - ELEVATION

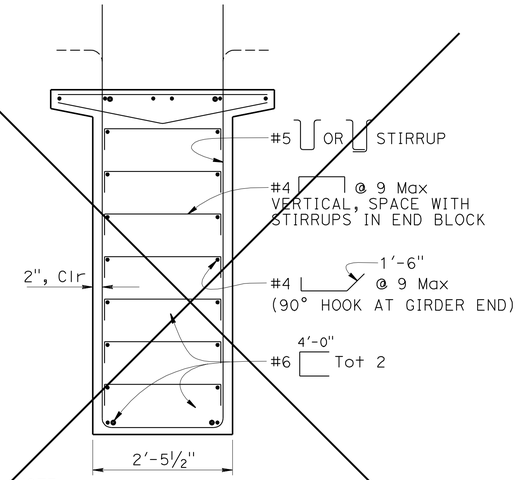

NOTE:
1. For details not shown, see "TYPICAL GIRDER SECTION" detail

2 SECTION E-E

NOTE:
1. For "GIRDER ELEVATION" and "TYPICAL GIRDER SECTION", see "PC/PS BULB-TEE GIRDER" sheet

NOTES:
1. For details shown but not noted, see "TYPICAL GIRDER SECTION" detail
2. W8 WWR not shown

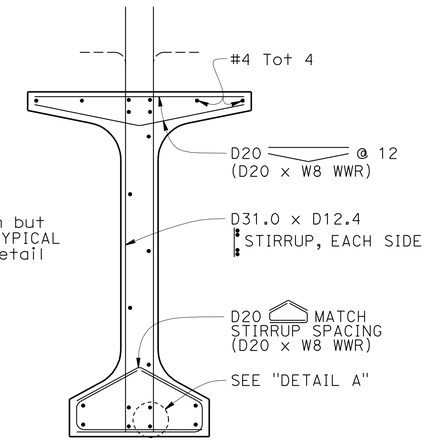

WELDED WIRE REINFORCEMENT (WWR) ALTERNATIVE

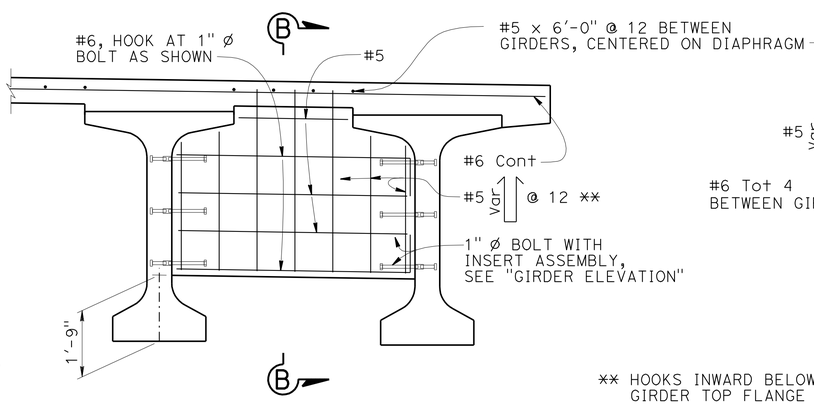

1 INTERMEDIATE DIAPHRAGM

** HOOKS INWARD BELOW GIRDER TOP FLANGE

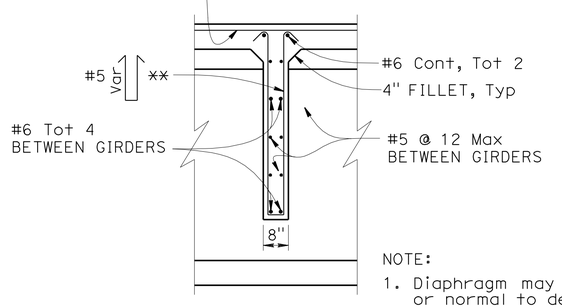

NOTE:
1. Diaphragm may be vertical or normal to deck grade

SECTION B-B

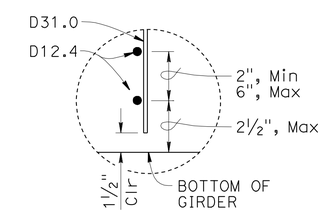

DETAIL A

NOTES:
1. Bottom of stirrup WWR detail shown, top similar
2. Longitudinal wire area shall be 40% or greater of vertical deformed wire's area

NOTE: For INTERMEDIATE DIAPHRAGM LOCATIONS, see "GIRDER LAYOUT" sheet.

REVISED STANDARD DRAWING

FILE NO. xs 1-121-2e

APPROVED BY Jim Ma (RESPONSIBLE TECHNICAL SPECIALIST)
APPROVAL DATE 02-01-10

RELEASED BY Susan Hida (RESPONSIBLE OFFICE CHIEF)
RELEASE DATE 02-01-10

1 Detail Revised
2 Detail Not Used

STATE OF CALIFORNIA DEPARTMENT OF TRANSPORTATION

DIVISION OF ENGINEERING SERVICES

BRIDGE NO. 56-0356
POST MILE 18.40

CENTRAL AVENUE UC (WIDEN)
PC/PS BULB-TEE GIRDER (MISCELLANEOUS DETAILS)

DS OSD 2147A (ENGLISH STANDARD DRAWING "XS" BORDER REV. 01/11/08)

ORIGINAL SCALE IN INCHES FOR REDUCED PLANS 0 1 2 3

CU 08
EA 448401

DISREGARD PRINTS BEARING EARLIER REVISION DATES

REVISION DATES (PRELIMINARY STAGE ONLY) 06/24/09 7-13-10

SHEET 19 OF 26

560356lgdt19.dgn

USERNAME => trlim

DATE PLOTTED => 30-APR-2011 TIME PLOTTED => 14:43

DIST.	COUNTY	ROUTE	MILE POST TOTAL PROJECT	SHEET NO.	TOTAL SHEETS
08	Riv	91	15.6/21.6	1727	2028

REGISTERED ENGINEER - CIVIL 11-30-10

4-25-11
PLANS APPROVAL DATE

The State of California or its officers or agents shall not be responsible for the accuracy or completeness of electronic copies of this plan sheet.

REGISTERED PROFESSIONAL ENGINEER HUAN VU No. 60696 Exp. 12-31-10 CIVIL STATE OF CALIFORNIA

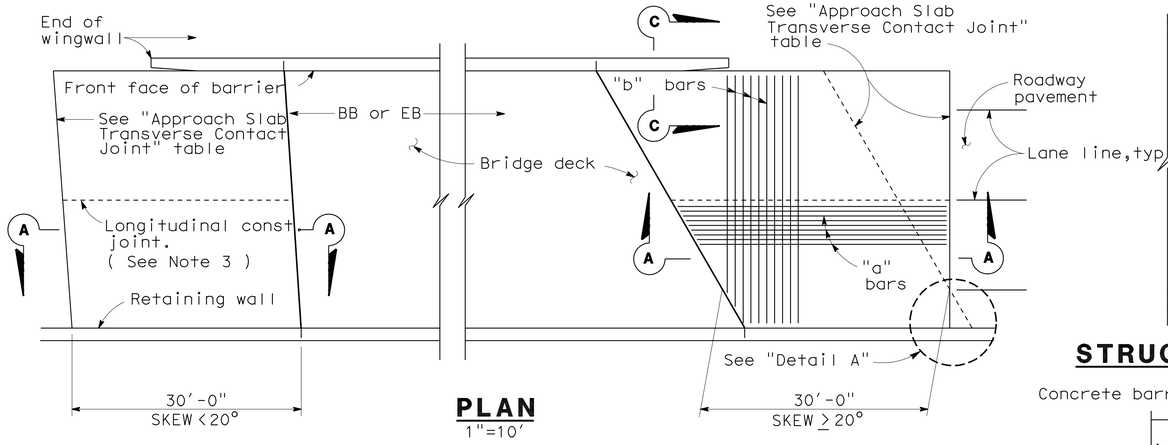

PLAN
1"=10'

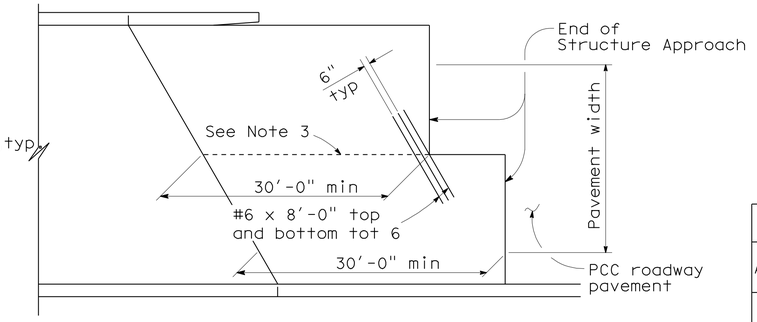

STRUCTURE APPROACH - END STAGGER DETAIL
No Scale

APPROACH SLAB TRANSVERSE CONTACT JOINT		
APPROACH SKEW	WITH AC ROADWAY PAVEMENT	WITH PCC ROADWAY PAVEMENT
< 20°	Parallel to face of paving notch	Parallel to face of paving notch
20° - 45°	Parallel to face of P N use (Detail A)	Stagger lines 24' to 36' apart.
> 45°	Parallel to face of P N use (Detail A)	Stagger at each lane line.

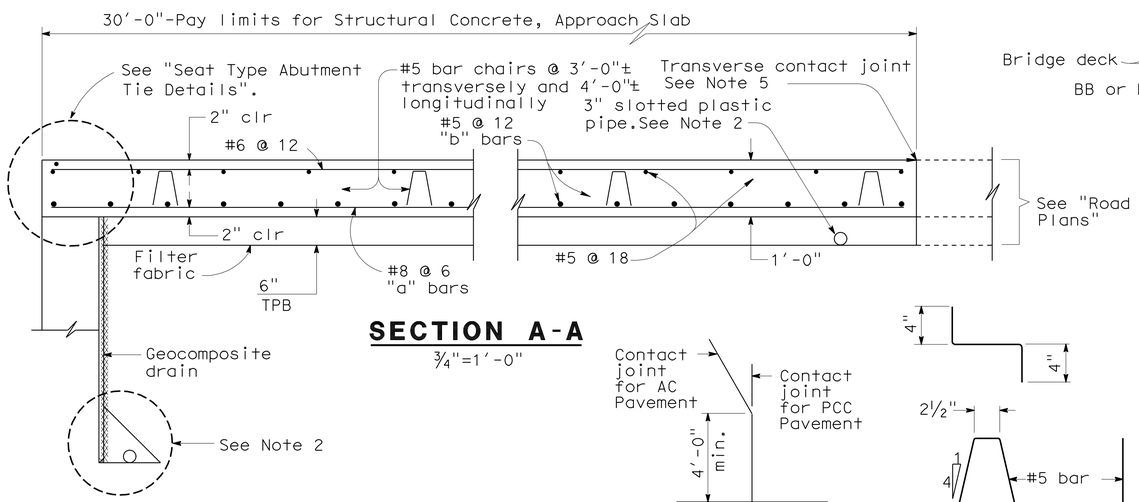

SECTION A-A
¾"=1'-0"

DETAIL A
No Scale

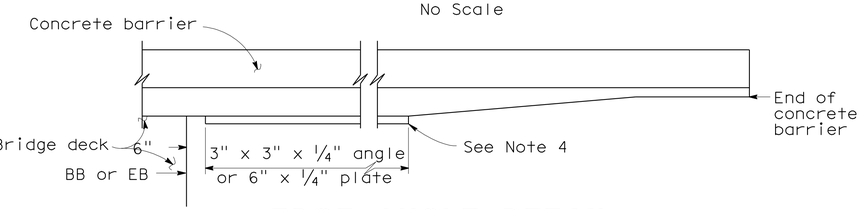

EDGE ANGLE DETAIL
½"=1'-0"

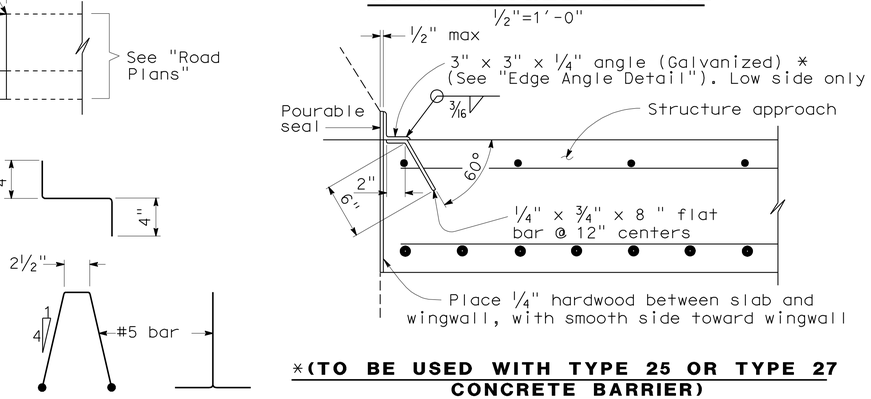

*(TO BE USED WITH TYPE 25 OR TYPE 27 CONCRETE BARRIER)

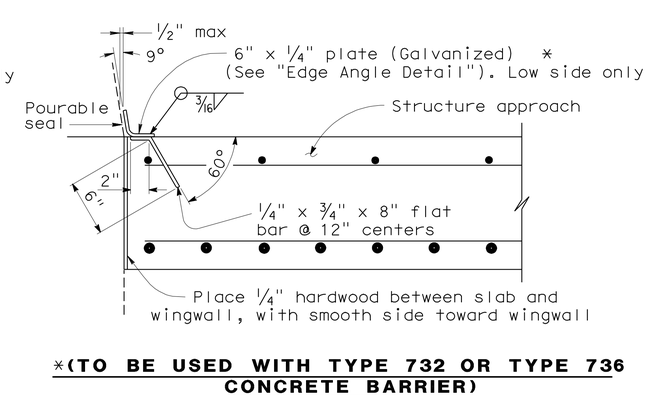

*(TO BE USED WITH TYPE 732 OR TYPE 736 CONCRETE BARRIER)

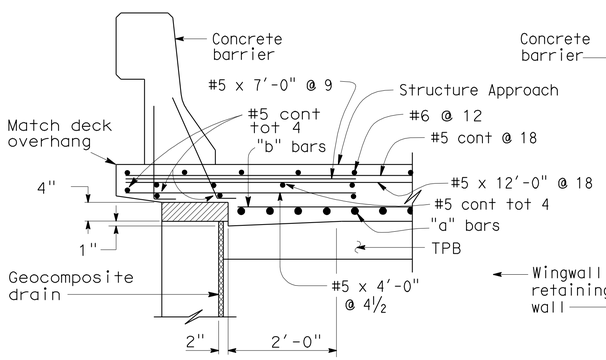

TYPE E-1

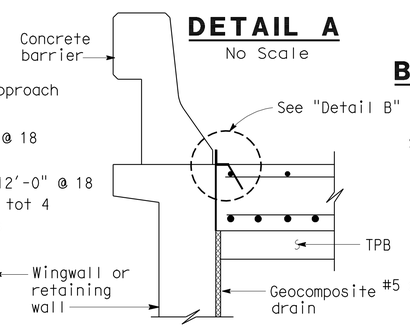

TYPE E-2

SECTION C-C
¾"=1'-0"

(Type E-1 to be used,unless otherwise shown on plans)

BAR CHAIR DETAIL
1½"=1'-0"

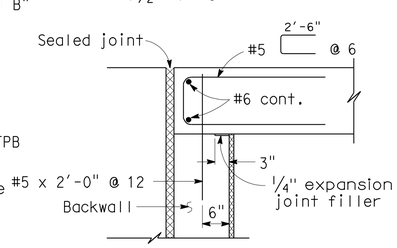

MR ≤ 2"

DETAIL B
1½"=1'-0"

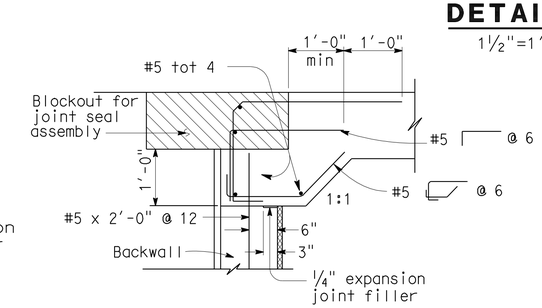

MR > 2"

SEAT TYPE ABUTMENT TIE DETAILS (SEE NOTE 1)
¾"=1'-0"

NOTES:

1. For details not shown,see Structure Plans. For MR ≤ 2",adjust bar reinforcement to clear a sawcut for sealed joint,when required.
2. For drainage details,see "Structure Approach Drainage Details" sheet.
3. Longitudinal construction joints,when permitted by the Engineer, shall be located on lane lines.
4. End angle or plate at beginning of barrier transition, end of wingwall or end of structure approach as applicable.
5. For transverse contact joint with new PCC paving, refer to Standard Plan P10.
6. At the contractor's option, approach slab transverse reinforcement may be placed parallel to paving notch. Spacing of transverse reinforcement is measured along ℄ roadway.

Remove all polystyrene.

STANDARD DRAWING				
RELEASE DATE 3/14/05	DESIGN	BY M.TRAFFALIS	CHECKED E.THORKILDSEN	RELEASED BY
FILE NO. xs3-120e	DETAILS	BY R.YEE	CHECKED E.THORKILDSEN	
	SUBMITTED	BY M.HA	DRAWING DATE 4/98	OFFICE CHIEF

STATE OF CALIFORNIA DEPARTMENT OF TRANSPORTATION

DIVISION OF ENGINEERING SERVICES

BRIDGE NO. 56-0356

MILE POST 18.40

CENTRAL AVENUE UC (WIDEN)

STRUCTURE APPROACH TYPE N(30S)

DS OSD 2147A (ENGLISH) (REV. X/XX/XX)

ORIGINAL SCALE IN INCHES FOR REDUCED PLANS 0 1 2 3

CU 08
EA 448401

DISREGARD PRINTS BEARING EARLIER REVISION DATES 2-02-10

REVISION DATES (PRELIMINARY STAGE ONLY)

SHEET 20 OF 26

USERNAME => trlim

560356ssa20.dgn

DATE PLOTTED => 30-APR-2011 TIME PLOTTED => 14:43

DIST.	COUNTY	ROUTE	MILE POST TOTAL PROJECT	SHEET NO.	TOTAL SHEETS
08	Riv	91	15.6/21.6	1728	2028

REGISTERED ENGINEER - CIVIL 11-30-10

4-25-11
PLANS APPROVAL DATE

REGISTERED PROFESSIONAL ENGINEER HUAN VU No. 60696 Exp. 12-31-10 CIVIL STATE OF CALIFORNIA

The State of California or its officers or agents shall not be responsible for the accuracy or completeness of electronic copies of this plan sheet.

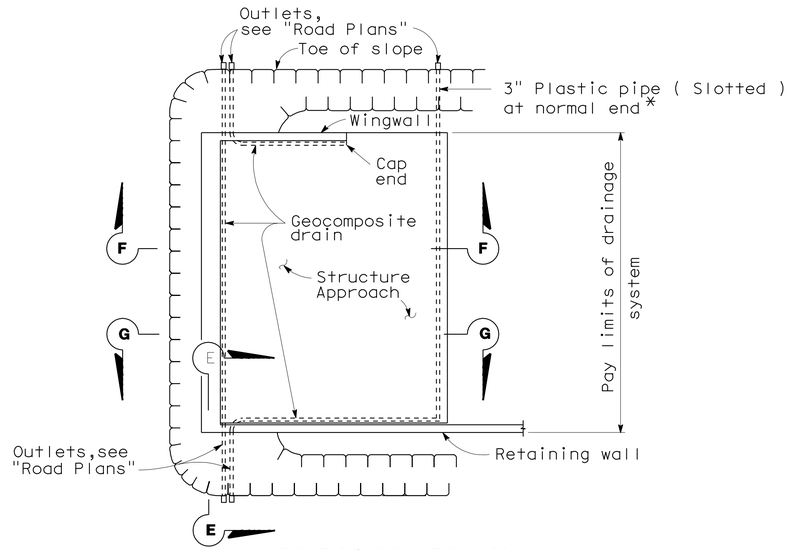

TYPICAL PLAN

1"=10'

*For pipe layout at staggered end, see "Detail B".

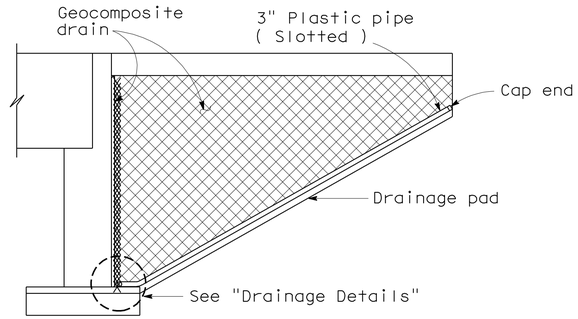

CANTILEVER WINGWALL SECTION F-F

1/4"=1'-0"

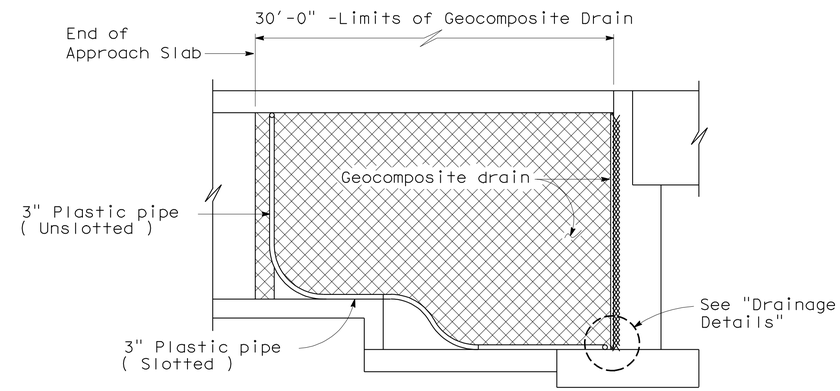

RETAINING WALL WINGWALL SECTION G-G

1/4"=1'-0"

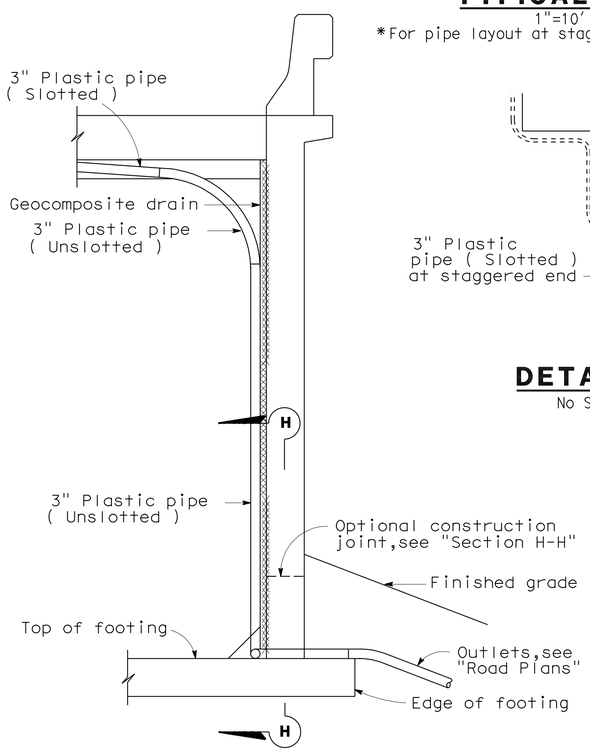

SECTION E-E

1/2"=1'-0"

NOTE: Bends and junctions in 3" plastic pipe are 30" radius min.

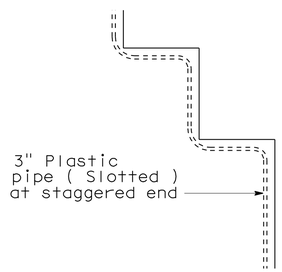

DETAIL B

No Scale

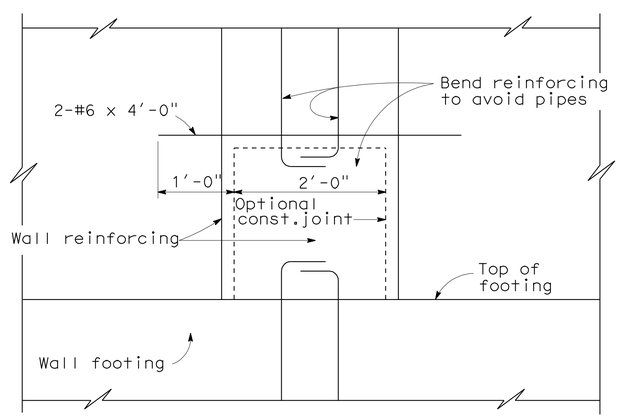

SECTION H-H

1"=1'-0"

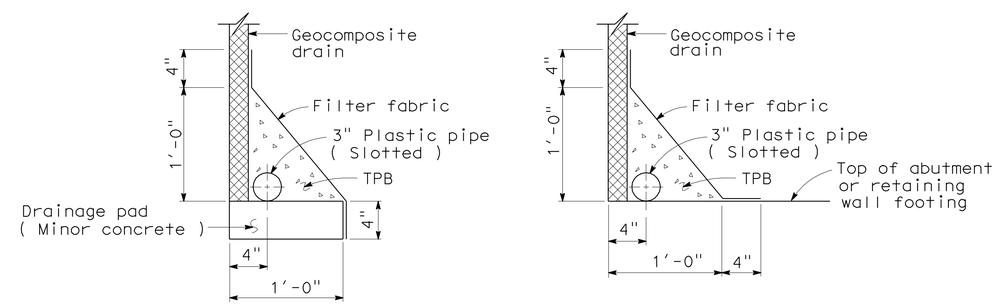

WITHOUT FOOTING **WITH FOOTING**

DRAINAGE DETAILS

1 1/2"=1'-0"

STANDARD DRAWING				
RELEASE DATE 4/23/98	DESIGN	BY M.TRAFFALIS	CHECKED E.THORKILDSEN	RELEASED BY
FILE NO. xs3-110e	DETAILS	BY R.YEE	CHECKED E.THORKILDSEN	
	SUBMITTED	BY M.HA	DRAWING DATE 4/98	OFFICE CHIEF

DS OSD 2147A (ENGLISH) (REV. X/XX/XX)

STATE OF CALIFORNIA DEPARTMENT OF TRANSPORTATION

DIVISION OF ENGINEERING SERVICES

ORIGINAL SCALE IN INCHES FOR REDUCED PLANS 0 1 2 3

CU 08
EA 448401

BRIDGE NO. 56-0356
MILE POST 18.40

CENTRAL AVENUE UC (WIDEN)

STRUCTURE APPROACH DRAINAGE DETAILS

DISREGARD PRINTS BEARING EARLIER REVISION DATES 2-02-10

REVISION DATES (PRELIMINARY STAGE ONLY)

SHEET 21 OF 26

USERNAME => trlim

560356ssadd21.dgn

DATE PLOTTED => 30-APR-2011 TIME PLOTTED => 14:43

DIST	COUNTY	ROUTE	POST MILES TOTAL PROJECT	SHEET No	TOTAL SHEETS
08	Riv	91	15.6/21.6	1729	2028

LICENSED LANDSCAPE ARCHITECT 11-30-10

4-25-11
PLANS APPROVAL DATE

LICENSED LANDSCAPE ARCHITECT Matthew Perry Hall No. 5202 Signature 10/31/2011 Renewal Date Date STATE OF CALIFORNIA

The State of California or its officers or agents shall not be responsible for the accuracy or completeness of electronic copies of this plan sheet.

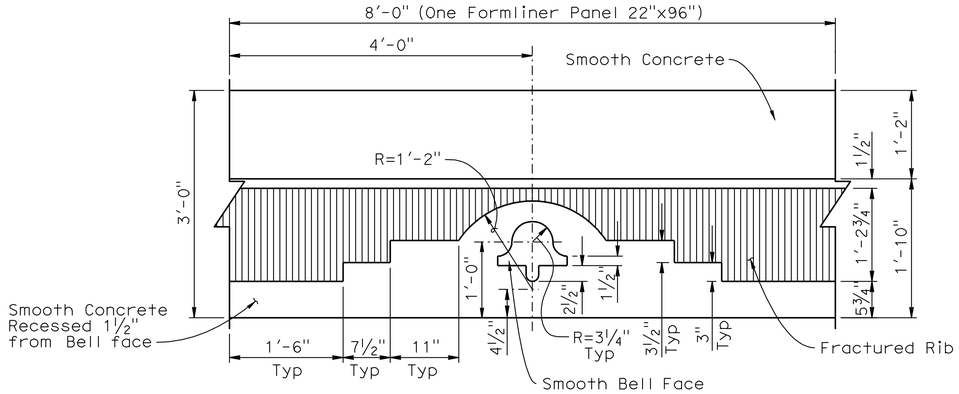

DETAIL "A"

1"=1'-0"

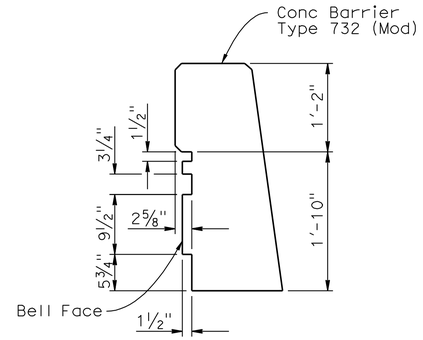

SECTION AT CENTER OF PANEL-BELL

1"=1'-0"

CONCRETE BARRIER TYPE 732 (MOD)

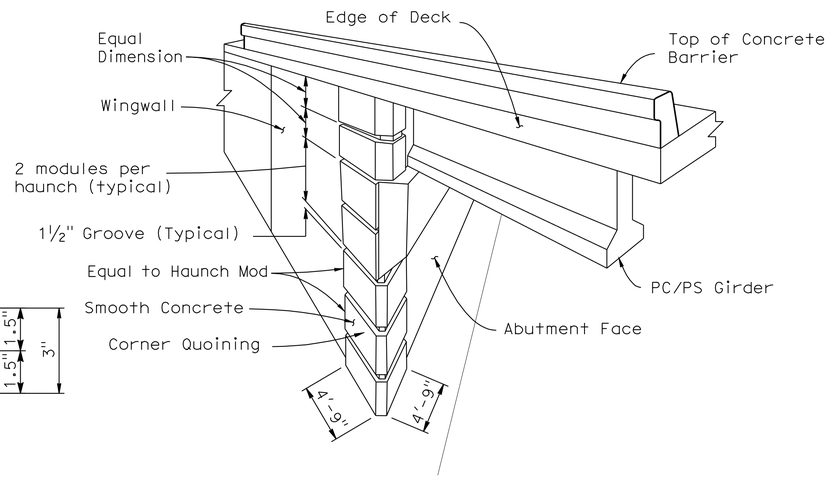

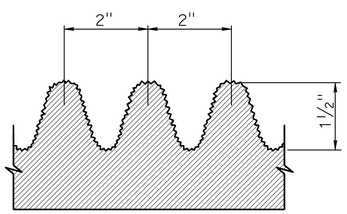

FRACTURED RIB TEXTURE (TYP)

No Scale

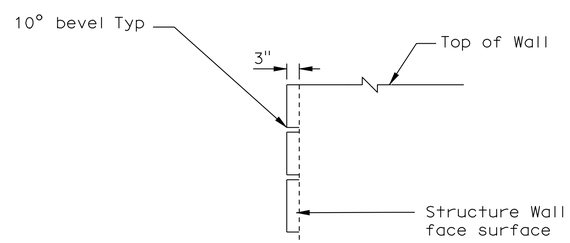

CORNER QUOINING SECTION

No Scale

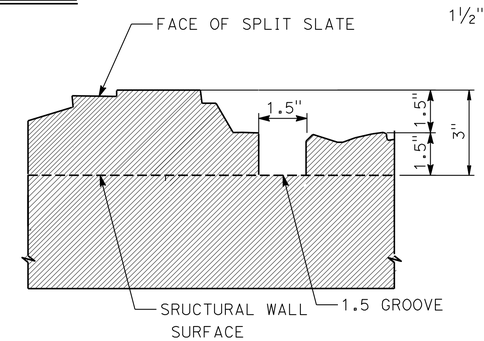

TYPICAL SPLIT SLATE TEXTURE

NO SCALE

PERSPECTIVE

NO SCALE

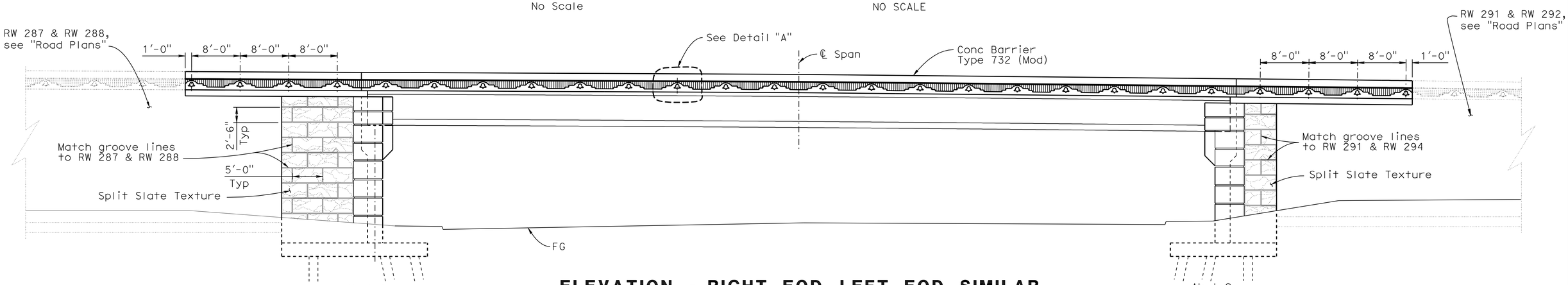

ELEVATION - RIGHT EOD, LEFT EOD SIMILAR

NO SCALE

DESIGN	BY B. Fleming/M. Hall	CHECKED M. Bishop	
DETAILS	BY G. Hallstrom	CHECKED M. Bishop	
QUANTITIES	BY F. Chen	CHECKED M. Crete	

STATE OF CALIFORNIA
DEPARTMENT OF TRANSPORTATION

DIVISION OF ENGINEERING SERVICES
STRUCTURE DESIGN
DESIGN BRANCH 10

BRIDGE NO. 56-0356
POST MILE 18.40

CENTRAL AVENUE UC (WIDEN)
ARCHITECTURAL DETAILS

STRUCTURES DESIGN DETAIL SHEET (ENGLISH) (REV. 10/25/05)

ORIGINAL SCALE IN INCHES FOR REDUCED PLANS 0 1 2 3

CU 08
EA 448401

DISREGARD PRINTS BEARING EARLIER REVISION DATES

REVISION DATES: 8-06-10 11-26-10 11-17-10

SHEET 22 OF 26

FILE => 560356umiscdt22.dgn

USERNAME => tttim DATE PLOTTED => 30-APR-2011 TIME PLOTTED => 14:44

DIST	COUNTY	ROUTE	POST MILES TOTAL PROJECT	SHEET No	TOTAL SHEETS
08	Riv	91	15.6/21.6	1730	2028

REGISTERED CIVIL ENGINEER 11-5-10

4-25-11
PLANS APPROVAL DATE

REGISTERED PROFESSIONAL ENGINEER Segaran Logeswaran No. C70280 Exp. 9-30-12 CIVIL STATE OF CALIFORNIA

The State of California or its officers or agents shall not be responsible for the accuracy or completeness of electronic copies of this plan sheet.

This LOTB sheet was prepared in accordance with the Caltrans Soil & Rock Logging, Classification, & Presentation Manual (June 2007).

BENCH MARK

SUHV 500
PK/W ON SIDEWALK
140.68′ Lt. ℄ Rte 91
Sta. 290+78.29
N 2 292 531.45
E 6 217 694.74
Elev. = 849.58′

SUHV 517
PK/W ON ISLAND TOC
140.40′ Rt. ℄ Rte 91
Sta. 292+46.10
N 2 292 487.25
E 6 218 019.00
Elev. = 854.37′

VERT DATUM: NAVD 88

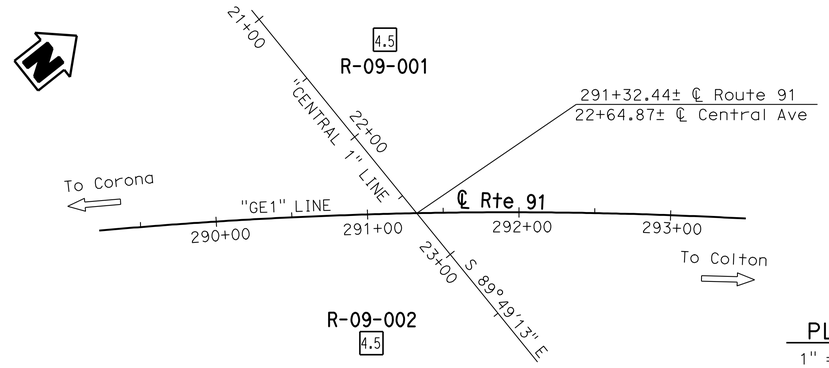

PLAN
1" = 50′

Note: Ground water not measured on Boring R-09-002.

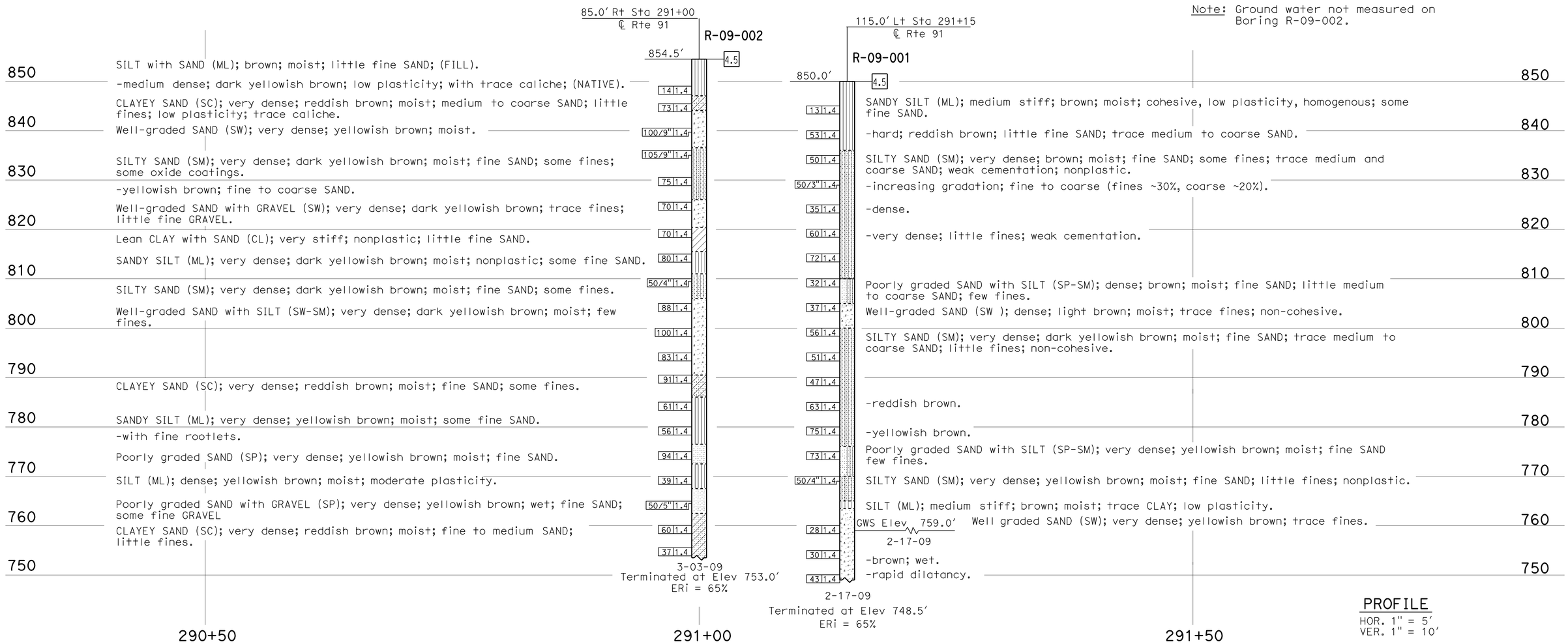

PROFILE
HOR. 1" = 5′
VER. 1" = 10′

ENGINEERING SERVICES	GEOTECHNICAL SERVICES	STATE OF CALIFORNIA DEPARTMENT OF TRANSPORTATION	DIVISION OF ENGINEERING SERVICES STRUCTURE DESIGN DESIGN BRANCH	BRIDGE NO. 56-0356 POST MILES 18.40	CENTRAL AVENUE UC (WIDEN) LOG OF TEST BORINGS 1 OF 4
FUNCTIONAL SUPERVISOR NAME: A. Perez-Cobo	DRAWN BY: F. Nguyen 01/10 CHECKED BY: W. J. Levine	FIELD INVESTIGATION BY: D. Cook			
OGS CIVIL LOG OF TEST BORINGS SHEET	ORIGINAL SCALE IN INCHES FOR REDUCED PLANS 0 1 2 3	CU 08 EA 448401	DISREGARD PRINTS BEARING EARLIER REVISION DATES	REVISION DATES 03-22-10 04-19-10 09-14-10 10-26-10 10-03-10	SHEET 23 OF 26

FILE => 560356zltb23.dgn

USERNAME => ?rlim DATE PLOTTED => 30-APR-2011 TIME PLOTTED => 14:44

DIST	COUNTY	ROUTE	POST MILES TOTAL PROJECT	SHEET No	TOTAL SHEETS
08	Riv	91	15.6/21.6	1731	2028

REGISTERED CIVIL ENGINEER 11-5-10

4-25-11
PLANS APPROVAL DATE

REGISTERED PROFESSIONAL ENGINEER Segaran Logeswaran No. C70280 Exp. 9-30-12 CIVIL STATE OF CALIFORNIA

The State of California or its officers or agents shall not be responsible for the accuracy or completeness of electronic copies of this plan sheet.

REFERENCE: CALTRANS SOIL & ROCK LOGGING, CLASSIFICATION, AND PRESENTATION MANUAL (JUNE 2007)

CEMENTATION

Description	Criteria
Weak	Crumbles or breaks with handling or little finger pressure.
Moderate	Crumbles or breaks with considerable finger pressure.
Strong	Will not crumble or break with finger pressure.

CONSISTENCY OF COHESIVE SOILS

Description	Unconfined Compressive Strength (tsf)	Pocket Penetrometer Measurement (tsf)	Torvane Measurement (tsf)	Field Approximation
Very Soft	< 0.25	< 0.25	< 0.12	Easily penetrated several inches by fist
Soft	0.25 to 0.50	0.25 to 0.50	0.12 to 0.25	Easily penetrated several inches by thumb
Medium Stiff	0.50 to 1.0	0.50 to 1.0	0.25 to 0.50	Penetrated several inches by thumb with moderate effort
Stiff	1 to 2	1 to 2	0.50 to 1.0	Readily indented by thumb but penetrated only with great effort
Very Stiff	2 to 4	2 to 4	1.0 to 2.0	Readily indented by thumbnail
Hard	> 4.0	> 4.0	> 2.0	Indented by thumbnail with difficulty

BOREHOLE IDENTIFICATION

Symbol	Hole Type	Description
Size	A	Auger Boring
Size	R P	Rotary drilled boring Rotary percussion boring (air)
Size	R	Rotary drilled diamond core
Size	HD HA	Hand driven (1-inch soil tube) Hand Auger
●	D	Dynamic Cone Penetration Boring
▲	CPT	Cone Penetration Test (ASTM D 5778-95)
⬚	O	Other

Note: Size in inches.

PLASTICITY OF FINE-GRAINED SOILS

Description	Criteria
Nonplastic	A 1/8-inch thread cannot be rolled at any water content.
Low	The thread can barely be rolled and the lump cannot be formed when drier than the plastic limit.
Medium	The thread is easy to roll and not much time is required to reach the plastic limit. The thread cannot be rerolled after reaching the plastic limit. The lump crumbles when drier than the plastic limit.
High	It takes considerable time rolling and kneading to reach the plastic limit. The thread can be rerolled several times after reaching the plastic limit. The lump can be formed without crumbling when drier than the plastic limit.

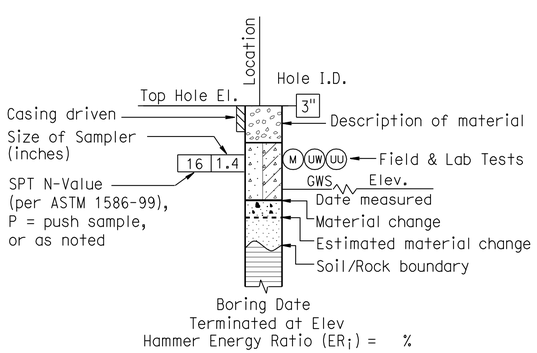

ROTARY BORING

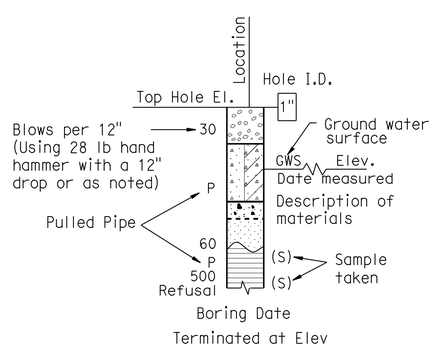

HAND BORING

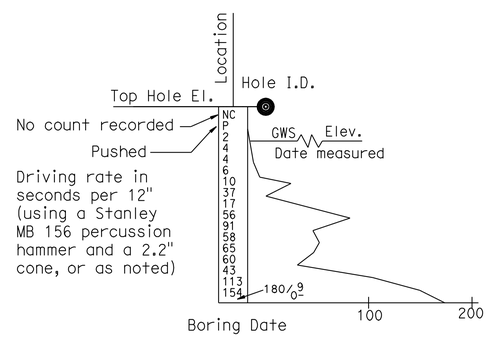

DYNAMIC CONE PENETRATION BORING

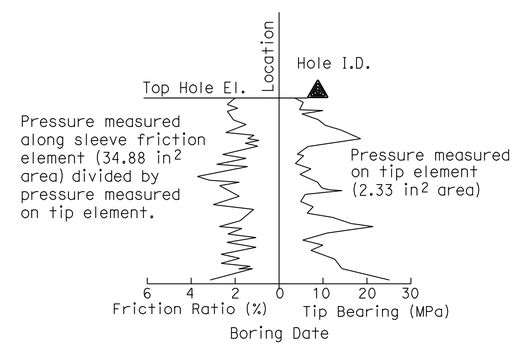

CONE PENETRATION TEST (CPT) SOUNDING

ENGINEERING SERVICES	GEOTECHNICAL SERVICES	STATE OF CALIFORNIA DEPARTMENT OF TRANSPORTATION	DIVISION OF ENGINEERING SERVICES STRUCTURE DESIGN DESIGN BRANCH	BRIDGE NO. 56-0356 POST MILE 18.40	CENTRAL AVENUE UC (WIDEN) LOG OF TEST BORINGS 2 OF 4
	PREPARED BY: F. Nguyen 01/10				

GS LOTB SOIL LEGEND

ORIGINAL SCALE IN INCHES FOR REDUCED PLANS 0 1 2 3

CU 08
EA 448401

DISREGARD PRINTS BEARING EARLIER REVISION DATES 11-03-10

REVISION DATES

SHEET 24 OF 26

FILE => 560356zltb24.dgn

USERNAME => tttim DATE PLOTTED => 30-APR-2011 TIME PLOTTED => 14:44

REFERENCE: CALTRANS SOIL & ROCK LOGGING, CLASSIFICATION, AND PRESENTATION MANUAL (JUNE 2007)

DIST	COUNTY	ROUTE	POST MILES TOTAL PROJECT	SHEET No	TOTAL SHEETS
08	Riv	91	15.6/21.6	1732	2028

REGISTERED CIVIL ENGINEER 11-5-10

4-25-11
PLANS APPROVAL DATE

REGISTERED PROFESSIONAL ENGINEER Segaran Logeswaran No. C70280 Exp. 9-30-12 CIVIL STATE OF CALIFORNIA

The State of California or its officers or agents shall not be responsible for the accuracy or completeness of electronic copies of this plan sheet.

GROUP SYMBOLS AND NAMES

Graphic/Symbol	Group Names	Graphic/Symbol	Group Names
GW	Well-graded GRAVEL Well-graded GRAVEL with SAND	CL	Lean CLAY Lean CLAY with SAND Lean CLAY with GRAVEL SANDY lean CLAY SANDY lean CLAY with GRAVEL GRAVELLY lean CLAY GRAVELLY lean CLAY with SAND
GP	Poorly graded GRAVEL Poorly graded GRAVEL with SAND		
GW-GM	Well-graded GRAVEL with SILT Well-graded GRAVEL with SILT and SAND	CL-ML	SILTY CLAY SILTY CLAY with SAND SILTY CLAY with GRAVEL SANDY SILTY CLAY SANDY SILTY CLAY with GRAVEL GRAVELLY SILTY CLAY GRAVELLY SILTY CLAY with SAND
GW-GC	Well-graded GRAVEL with CLAY (or SILTY CLAY) Well-graded GRAVEL with CLAY and SAND (or SILTY CLAY and SAND)		
GP-GM	Poorly graded GRAVEL with SILT Poorly graded GRAVEL with SILT and SAND	ML	SILT SILT with SAND SILT with GRAVEL SANDY SILT SANDY SILT with GRAVEL GRAVELLY SILT GRAVELLY SILT with SAND
GP-GC	Poorly graded GRAVEL with CLAY (or SILTY CLAY) Poorly graded GRAVEL with CLAY and SAND (or SILTY CLAY and SAND)		
GM	SILTY GRAVEL SILTY GRAVEL with SAND	OL	ORGANIC lean CLAY ORGANIC lean CLAY with SAND ORGANIC lean CLAY with GRAVEL SANDY ORGANIC lean CLAY SANDY ORGANIC lean CLAY with GRAVEL GRAVELLY ORGANIC lean CLAY GRAVELLY ORGANIC lean CLAY with SAND
GC	CLAYEY GRAVEL CLAYEY GRAVEL with SAND		
GC-GM	SILTY, CLAYEY GRAVEL SILTY, CLAYEY GRAVEL with SAND	OL	ORGANIC SILT ORGANIC SILT with SAND ORGANIC SILT with GRAVEL SANDY ORGANIC SILT SANDY ORGANIC SILT with GRAVEL GRAVELLY ORGANIC SILT GRAVELLY ORGANIC SILT with SAND
SW	Well-graded SAND Well-graded SAND with GRAVEL		
SP	Poorly graded SAND Poorly graded SAND with GRAVEL	CH	Fat CLAY Fat CLAY with SAND Fat CLAY with GRAVEL SANDY fat CLAY SANDY fat CLAY with GRAVEL GRAVELLY fat CLAY GRAVELLY fat CLAY with SAND
SW-SM	Well-graded SAND with SILT Well-graded SAND with SILT and GRAVEL		
SW-SC	Well-graded SAND with CLAY (or SILTY CLAY) Well-graded SAND with CLAY and GRAVEL (or SILTY CLAY and GRAVEL)	MH	Elastic SILT Elastic SILT with SAND Elastic SILT with GRAVEL SANDY elastic SILT SANDY elastic SILT with GRAVEL GRAVELLY elastic SILT GRAVELLY elastic SILT with SAND
SP-SM	Poorly graded SAND with SILT Poorly graded SAND with SILT and GRAVEL		
SP-SC	Poorly graded SAND with CLAY (or SILTY CLAY) Poorly graded SAND with CLAY and GRAVEL (or SILTY CLAY and GRAVEL)	OH	ORGANIC fat CLAY ORGANIC fat CLAY with SAND ORGANIC fat CLAY with GRAVEL SANDY ORGANIC fat CLAY SANDY ORGANIC fat CLAY with GRAVEL GRAVELLY ORGANIC fat CLAY GRAVELLY ORGANIC fat CLAY with SAND
SM	SILTY SAND SILTY SAND with GRAVEL		
SC	CLAYEY SAND CLAYEY SAND with GRAVEL	OH	ORGANIC elastic SILT ORGANIC elastic SILT with SAND ORGANIC elastic SILT with GRAVEL SANDY ORGANIC elastic SILT SANDY ORGANIC elastic SILT with GRAVEL GRAVELLY ORGANIC elastic SILT GRAVELLY ORGANIC elastic SILT with SAND
SC-SM	SILTY, CLAYEY SAND SILTY, CLAYEY SAND with GRAVEL		
PT	PEAT	OL/OH	ORGANIC SOIL ORGANIC SOIL with SAND ORGANIC SOIL with GRAVEL SANDY ORGANIC SOIL SANDY ORGANIC SOIL with GRAVEL GRAVELLY ORGANIC SOIL GRAVELLY ORGANIC SOIL with SAND
	COBBLES COBBLES and BOULDERS BOULDERS		

FIELD AND LABORATORY TESTING

- (C) Consolidation (ASTM D 2435)
- (CL) Collapse Potential (ASTM D 5333)
- (CP) Compaction Curve (CTM 216)
- (CR) Corrosivity Testing (CTM 643, CTM 422, CTM 417)
- (CU) Consolidated Undrained Triaxial (ASTM D 4767)
- (DS) Direct Shear (ASTM D 3080)
- (EI) Expansion Index (ASTM D 4829)
- (M) Moisture Content (ASTM D 2216)
- (OC) Organic Content-% (ASTM D 2974)
- (P) Permeability (CTM 220)
- (PA) Particle Size Analysis (ASTM D 422)
- (PI) Plasticity Index (AASHTO T 90) Liquid Limit (AASHTO T 89)
- (PL) Point Load Index (ASTM D 5731)
- (PM) Pressure Meter
- (PP) Pocket Penetrometer
- (R) R-Value (CTM 301)
- (SE) Sand Equivalent (CTM 217)
- (SG) Specific Gravity (AASHTO T 100)
- (SL) Shrinkage Limit (ASTM D 427)
- (SW) Swell Potential (ASTM D 4546)
- (TV) Pocket Torvane
- (UC) Unconfined Compression-Soil (ASTM D 2166) Unconfined Compression-Rock (ASTM D 2938)
- (UU) Unconsolidated Undrained Triaxial (ASTM D 2850)
- (UW) Unit Weight (ASTM D 4767)
- (VS) Vane Shear (AASHTO T 223)

APPARENT DENSITY OF COHESIONLESS SOILS

Description	SPT N_{60} (Blows / 12 inches)
Very loose	0 - 4
Loose	5 - 10
Medium Dense	11 - 30
Dense	31 - 50
Very Dense	> 50

MOISTURE

Description	Criteria
Dry	Absence of moisture, dusty, dry to the touch
Moist	Damp but no visible water
Wet	Visible free water, usually soil is below water table

PERCENT OR PROPORTION OF SOILS

Description	Criteria
Trace	Particles are present but estimated to be less than 5%
Few	5 to 10%
Little	15 to 25%
Some	30 to 45%
Mostly	50 to 100%

PARTICLE SIZE

Description		Size
Boulder		> 12"
Cobble		3" to 12"
Gravel	Coarse	3/4" to 3"
	Fine	No. 4 to 3/4"
Sand	Coarse	No. 10 to No. 4
	Medium	No. 40 to No. 10
	Fine	No. 200 to No. 40

ENGINEERING SERVICES

GEOTECHNICAL SERVICES
PREPARED BY: F. Nguyen 01/10

STATE OF CALIFORNIA DEPARTMENT OF TRANSPORTATION

DIVISION OF ENGINEERING SERVICES STRUCTURE DESIGN
DESIGN BRANCH

BRIDGE NO. 56-0356
POST MILE 18.40

CENTRAL AVENUE UC (WIDEN)
LOG OF TEST BORINGS 3 OF 4

GS LOTB SOIL LEGEND

ORIGINAL SCALE IN INCHES FOR REDUCED PLANS 0 1 2 3

CU 08
EA 448401

DISREGARD PRINTS BEARING EARLIER REVISION DATES 11-03-10

REVISION DATES

SHEET 25 OF 26

FILE => 560356zltb25.dgn

USERNAME => tr11m DATE PLOTTED => 30-APR-2011 TIME PLOTTED => 14:44

FED. ROAD DIV. NO.	STATE	ROUTE NO.	FISCAL YEAR	SHEET NO.	TOTAL SHEETS
7	CAL.	(1-R26.5/R7)		91	180

DIST.	COUNTY	ROUTE	SECTION	SHEET NO.	TOTAL SHEETS
VIII	Riv	91		15	15

91.5

DIVISION OF ENGINEERING SERVICES - GEOTECHNICAL SERVICES

As-Built Log of Test Borings sheet is considered an informational document only. As such, the State of California registration seal with signature, license number and registration certificate expiration date confirm that this is a true and accurate copy of the original document. This drawing is available and presented only for the convenience of any bidder, contractor or other interested party.

DIST.	COUNTY	ROUTE	POST MILES-TOTAL PROJECT	Sheet No.	Total Sheets
08	Riv	91	15.6/21.6	1733	2028

K. Douglas Cook 7/22/10
CERTIFIED ENGINEERING GEOLOGIST DATE

PROFESSIONAL GEOLOGIST K. Douglas Cook No. 1391 Exp. 12-31-11 CERTIFIED ENGINEERING GEOLOGIST STATE OF CALIFORNIA

CENTRAL AVE UC (WIDEN)

LOG OF TEST BORINGS 4 OF 4

NOTE: A COPY OF THIS LOG OF TEST BORINGS IS AVAILABLE AT OFFICE OF STRUCTURE MAINTENANCE AND INVESTIGATIONS, SACRAMENTO, CALIFORNIA

CU: 08
EA: 448401

BRIDGE No. 56-0356

Sheet 26 of 26

TO ACCOMPANY PLANS DATED 4-25-11

AS BUILT PLANS
Contract No. 57-8VC2
Date Completed
Document No. 80000802

AS BUILT
NO CORRECTIONS BY L. Reese
DATE 6-27-57

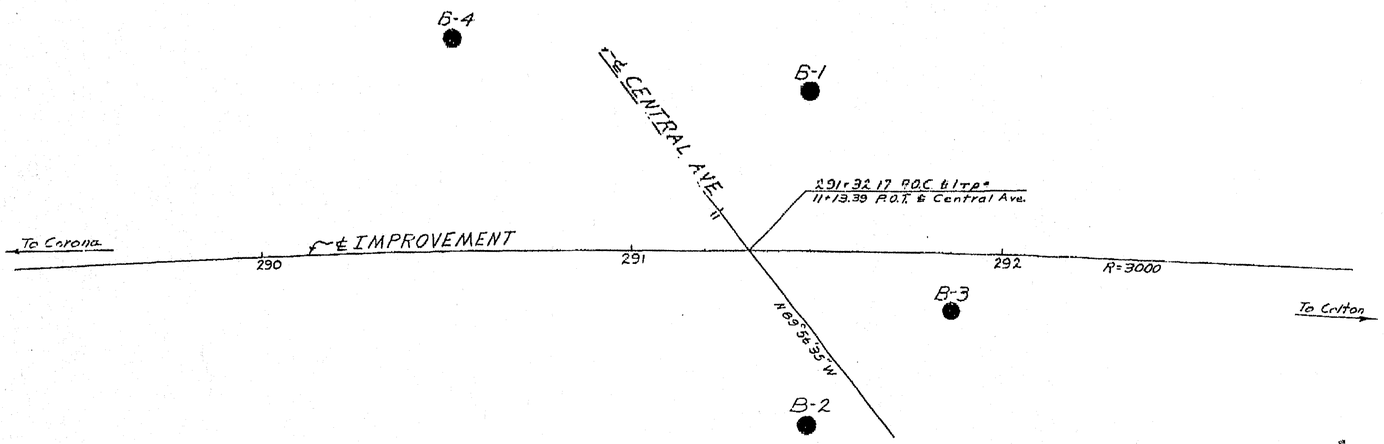

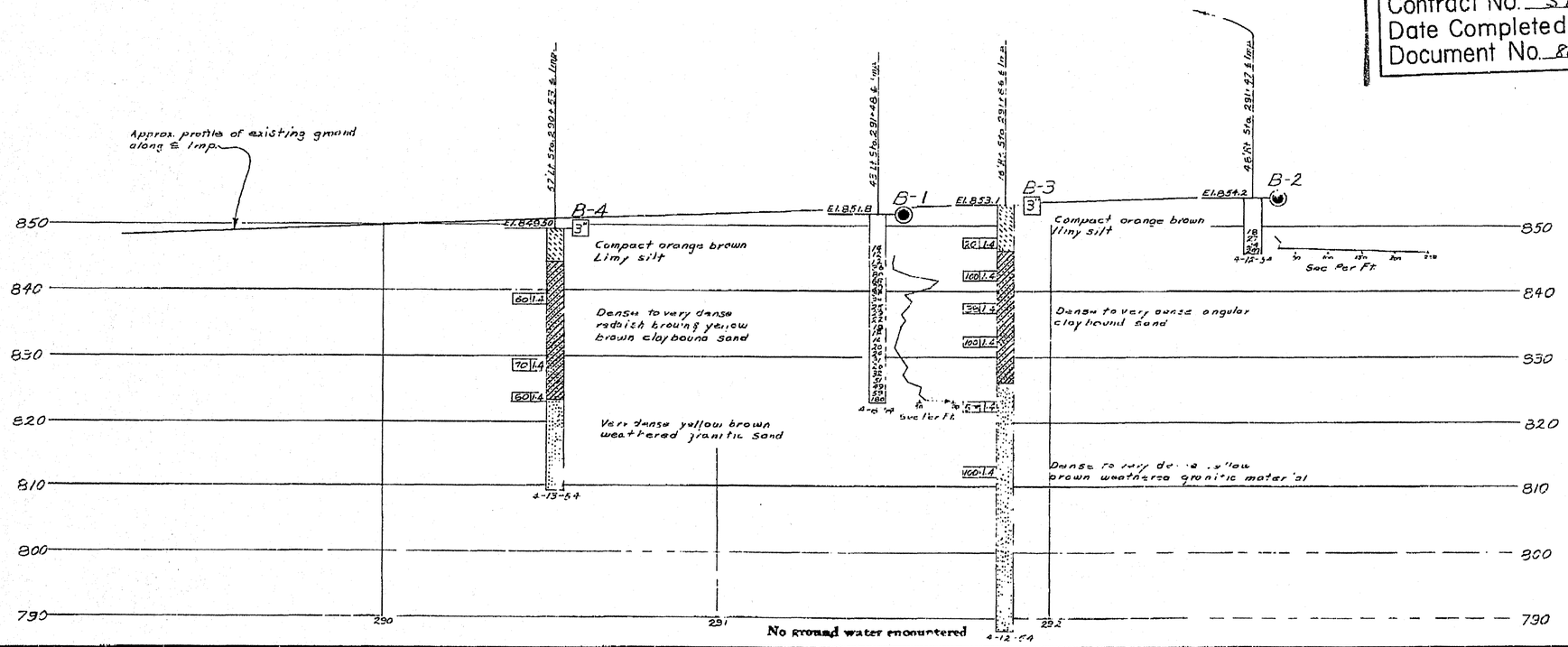

Test Boring By Bridge Dept.

B.M. Central - Glenwood '52
Spike in T.P.* 24" 34" Rt Sta 294+92 P.O.C. & Imp.
El. 875.35'

B.M. Sunnyside - Nevada '53
Spk'd nail in top of E.C.C. curb 305' Lt
Sta 292+90 P.O.C. & Imp.
El. 849.20

CLASSIFICATION OF MATERIAL BASED ON STANDARD GRADE SIZE LIMITS

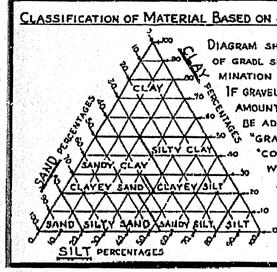

DIAGRAM SHOWING THE BASIS FOR ESTIMATES OF GRADE SIZE DISTRIBUTION USED IN DETERMINATION OF CLASS NAMES.

IF GRAVEL IS PRESENT IN APPRECIABLE AMOUNTS THE TERM "GRAVELLY" MAY BE ADDED TO THE CLASS NAME, VIZ. "GRAVELLY SAND." THE TERMS "COARSE", "MEDIUM" AND "FINE" WHEN USED TO DESCRIBE SAND, SILT AND GRAVEL REFER TO STANDARD GRADE SIZE LIMITS.

LEGEND OF EARTH MATERIALS

- GRAVEL
- SAND
- SILT
- CLAY
- SANDY CLAY OR CLAYEY SAND
- SANDY SILT OR SILTY SAND
- SILTY CLAY OR CLAYEY SILT
- PEAT AND/OR ORGANIC MATTER
- FILL MATERIAL
- IGNEOUS ROCK
- SEDIMENTARY ROCK
- METAMORPHIC ROCK

LEGEND OF BORING OPERATIONS

- PLAN OF ANY BORING
- PENETROMETER
- 2¼" CONE PENETROMETER
- SAMPLER BORING (DRY)
- ROTARY BORING (WET)
- AUGER BORING (DRY)
- JET BORING
- CORE BORING
- TEST PIT

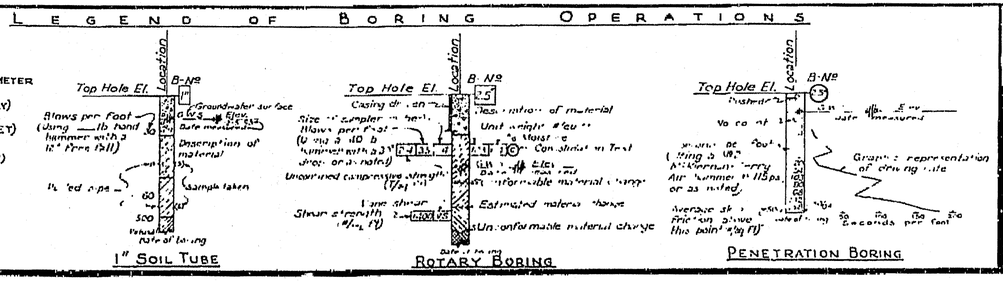

NOTES

The contractor's attention is directed to Section 2, Article (c) of the Standard Specifications and to the Special Provisions accompanying this set of plans.

Classification of earth material as shown on this sheet is based upon field inspection and is not to be construed to imply mechanical analysis.

STATE OF CALIFORNIA
DEPARTMENT OF PUBLIC WORKS
DIVISION OF HIGHWAYS

CENTRAL AVENUE U.C.

LOG OF TEST BORINGS

SCALE Horz. 1" = 20' Vert. 1" = 10' | BRIDGE 56-0356 | FILE | DRAWING C-38.8-15

BRIDGE DEPARTMENT

560356zltb26.tif

DIST	COUNTY	ROUTE	POST MILES TOTAL PROJECT	SHEET No	TOTAL SHEETS
08	Riv	91	15.6/21.6	1734	2028

REGISTERED CIVIL ENGINEER 11-30-10 DATE

4-25-11
PLANS APPROVAL DATE

REGISTERED PROFESSIONAL ENGINEER HUAN VU No. 60696 Exp. 12-31-10 CIVIL STATE OF CALIFORNIA

The State of California or its officers or agents shall not be responsible for the accuracy or completeness of electronic copies of this plan sheet.

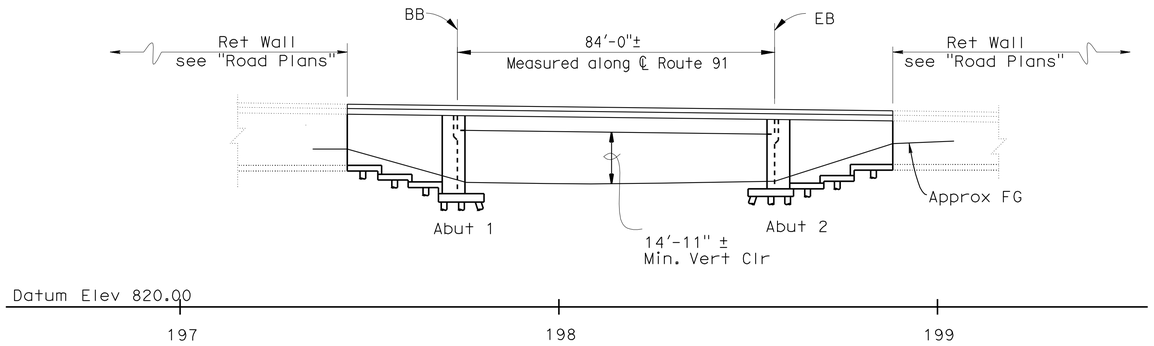

ELEVATION

1" = 20'

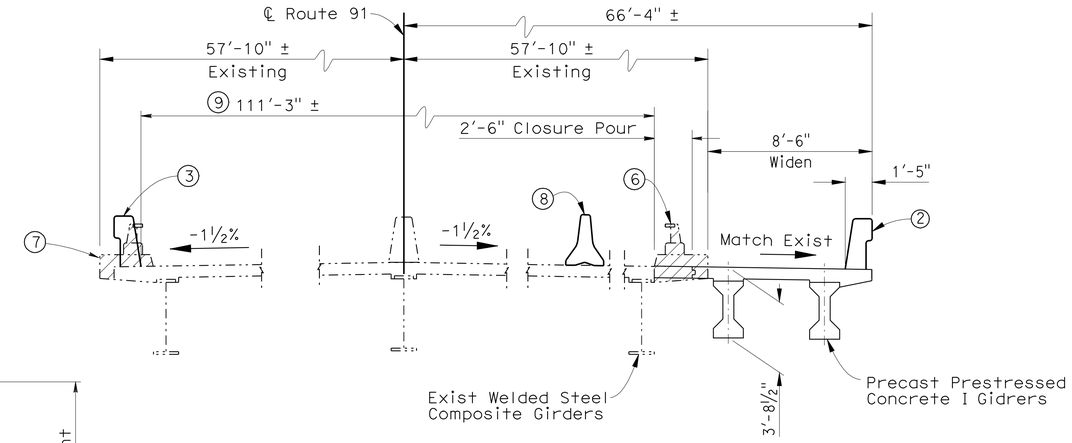

TYPICAL SECTION

¼" = 1'-0"

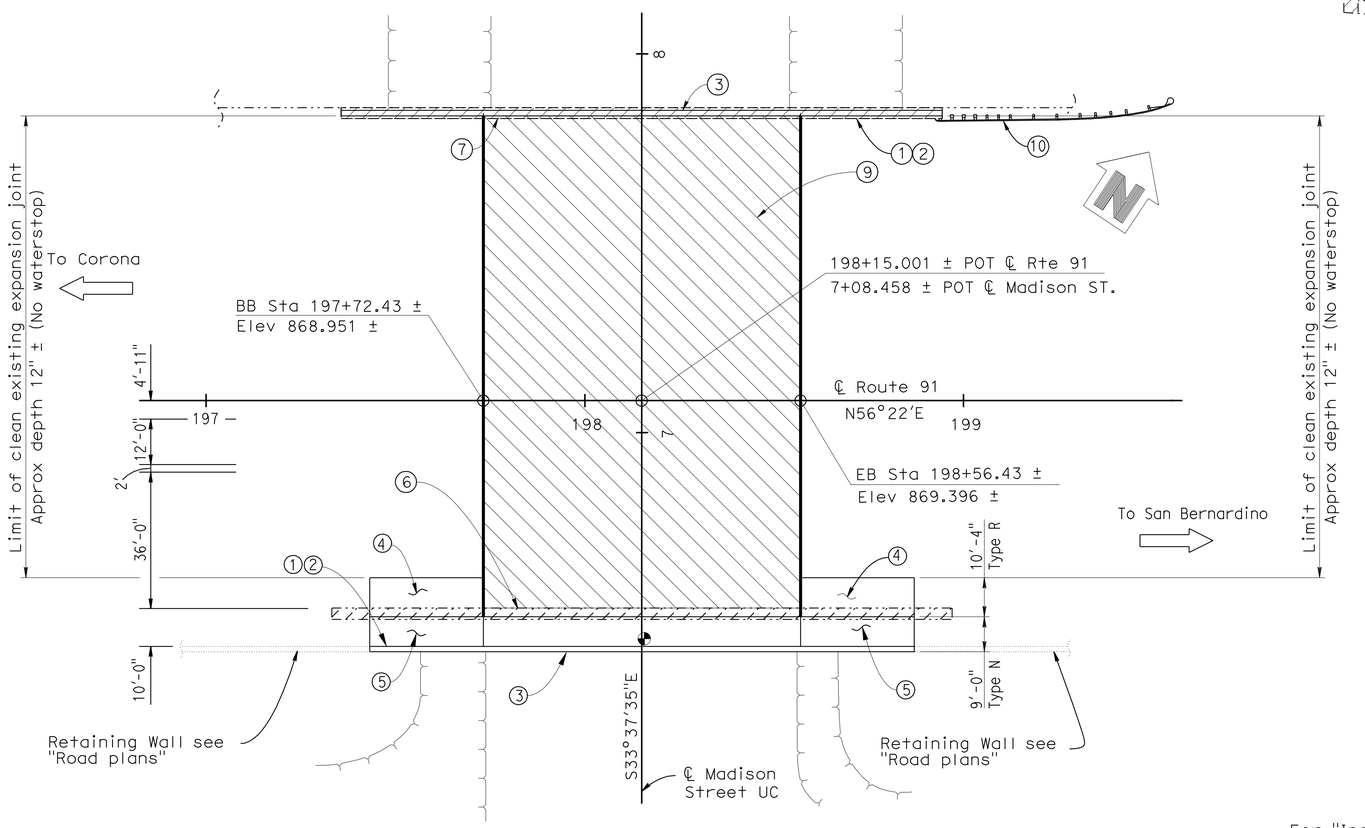

PLAN

1" = 20'

NOTES:

1. Paint "Br. No 56-0384" & "MADISON STREET UC"
2. Concrete Barrier Type 732
3. Concrete Barrier Type 732R
4. Structure Approach Type R (30S)
5. Structure Approach Type N (30S)
6. Remove exist Overhang, Curb (Type F) & Railing (Type 9)
7. Remove existing Curb (Type F) & Railing (Type 9)
8. Temporary Railing (Type K), see "Road Plans"
9. Clean & Treat Bridge Deck with Methacrylate Prior to bridge deck treatment, remove unsound concrete and patch with rapid setting concrete
10. MBGR, see "Road Plans"

LEGEND:

- Indicates New Construction
- Indicates Existing Structure
- Indicates Limits of Joint Seal Replacement
- Indicates LImits of Bridge Removal (portion)
- Indicates LImits of Clean & Treat Bridge Deck
- Indicates Point of Minimum Vertical Clearance

NOTE:
THE CONTRACTOR SHALL VERIFY ALL CONTROLLING FIELD DIMENSIONS BEFORE ORDERING OR FABRICATING ANY MATERIAL.

For "Index to Plans", "General Notes", "Standard Plans", "Pile Data" and "Quantities", see "INDEX TO PLANS" sheet.

DANIEL T. ADAMS
DESIGN ENGINEER

	BY	CHECKED
DESIGN	H. Vu	H. Vu
DETAILS	Y. Tang	H. Vu
QUANTITIES	D. Azzam	R. Anderson

LOAD & RESISTANCE FACTOR DESIGN — LIVE LOADING: HL93 W/"LOW-BOY"; PERMIT DESIGN VEHICLE

	BY	CHECKED
LAYOUT	H. Vu	D. Azzam
SPECIFICATIONS	D.Klein	PLANS AND SPECS COMPARED D.Klein

ORIGINAL SCALE IN INCHES FOR REDUCED PLANS 0 1 2 3

STATE OF CALIFORNIA
DEPARTMENT OF TRANSPORTATION

DIVISION OF ENGINEERING SERVICES
STRUCTURE DESIGN
DESIGN BRANCH 10

CU 08
EA 448401

BRIDGE NO. 56-0384
POST MILE 16.6

MADISON STREET UC (WIDEN)
GENERAL PLAN

DISREGARD PRINTS BEARING EARLIER REVISION DATES

REVISION DATES: 6-26-08 10-02-08 5-19-09 4-28-10 6-25-10

SHEET 1 OF 17

STRUCTURES DESIGN GENERAL PLAN SHEET (ENGLISH) (REV.07-24-06)

FILE => 560384agp01.dgn

USERNAME => tr1tim DATE PLOTTED => 30-APR-2011 TIME PLOTTED => 14:44

DIST	COUNTY	ROUTE	POST MILES TOTAL PROJECT	SHEET No	TOTAL SHEETS
08	Riv	91	15.6/21.6	1735	2028

REGISTERED CIVIL ENGINEER 11-30-10 DATE

4-25-11
PLANS APPROVAL DATE

REGISTERED PROFESSIONAL ENGINEER HUAN VU No. 60696 Exp. 12-31-10 CIVIL STATE OF CALIFORNIA

The State of California or its officers or agents shall not be responsible for the accuracy or completeness of electronic copies of this plan sheet.

INDEX TO PLANS

Sheet No.	Title
1	GENERAL PLAN
2	INDEX TO PLANS
3	FOUNDATION PLAN
4	ABUTMENT LAYOUT
5	ABUTMENT DETAILS No. 1
6	ABUTMENT DETAILS No. 2
7	TYPICAL SECTION
8	GIRDER LAYOUT
9	PRECAST PRESTRESSED I GIRDER
10	MISCELLANEOUS DETAILS
11	STRUCTURE APPROACH TYPE N(30S)
12	STRUCTURE APPROACH TYPE R(30S)
13	STRUCTURE APPROACH DRAINAGE DETAILS
14	ARCHITECTURAL DETAILS
15	LOG OF TEST BORINGS 1 OF 3
16	LOG OF TEST BORINGS 2 OF 3
17	LOG OF TEST BORINGS 3 OF 3

QUANTITIES

REMOVE UNSOUND CONCRETE	2	CF
CLEAN BRIDGE DECK	9,048	SQFT
BRIDGE REMOVAL (PORTION), LOCATION B	LUMP	SUM
STRUCTURE EXCAVATION (BRIDGE)	242	CY
STRUCTURE BACKFILL (BRIDGE)	323	CY
AGGREGATE BASE (APPROACH SLAB)	2	CY
FURNISH PILING (CLASS 90) (ALTERNATIVE V)	551	LF
DRIVE PILE (CLASS 90) (ALTERNATIVE V)	12	EA
FURNISH PILING (CLASS 140) (ALTERNATIVE V)	414	LF
DRIVE PILE (CLASS 140) (ALTERNATIVE V)	10	EA
STRUCTURAL CONCRETE, BRIDGE FOOTING	52	CY
STRUCTURAL CONCRETE, BRIDGE	101	CY
STRUCTURAL CONCRETE, APPROACH SLAB (TYPE N)	19	CY
STRUCTURAL CONCRETE, APPROACH SLAB (TYPE R)	23	CY
ARCHITECTURAL SURFACE(TEXTURED CONCRETE) FRACTURED RIB TEXTURE	826	SQFT
DRILL AND BOND DOWEL	106	LF
CLEAN EXPANSION JOINT	220	LF
RAPID SETTING CONCRETE (PATCH)	2	CF
FURNISH PRECAST PRESTRESSED CONCRETE GIRDER (80'-90')	2	EA
ERECT PRECAST PRESTRESSED CONCRETE GIRDER	2	EA
JOINT SEAL (MR 1")	242	LF
BAR REINFORCING STEEL (BRIDGE)	30,767	LB
TREAT BRIDGE DECK	9,048	SQFT
FURNISH BRIDGE DECK TREATMENT MATERIAL	91	GAL
CONCRETE BARRIER (TYPE 732)	312	LF

NOTE:
THE CONTRACTOR SHALL VERIFY ALL CONTROLLING FIELD DIMENSIONS BEFORE ORDERING OR FABRICATING ANY MATERIAL.

PILE DATA TABLE

Location	Pile Type	Nominal Resistance (kips)		Design Tip Elevation (ft)	Specified Tip Elevation (ft)	Nominal Driving Resistance Required (kips)
		Compression	Tension			
Abut 1	Class 140 Alt. V	260	0	804.0 (a)	804.0	260
Abut 2	Class 140 Alt. V	260	0	806.0 (a)	806.0	180
Wingwall	Class 90 Alt. V	180	0	806.0 (a)	806.0	180

NOTES:

1. Design Tip Elev is controlled by (a) Compression

STANDARD PLANS DATED MAY 2006

A10A	ACRONYMS AND ABBREVIATIONS (SHEET 1 OF 2)
A10B	ACRONYMS AND ABBREVIATIONS (SHEET 2 OF 2)
A10C	SYMBOLS (SHEET 1 OF 2)
A10D	SYMBOLS (SHEET 2 OF 2)
A62B	LIMITS OF PAYMENT FOR EXCAVATION AND BACKFILL - BRIDGE SURCHARGE AND WALL
A62C	LIMITS OF PAYMENT FOR EXCAVATION AND BACKFILL - BRIDGE
BO-1	BRIDGE DETAILS
BO-3	BRIDGE DETAILS
BO-5	BRIDGE DETAILS
BO-13	BRIDGE DETAILS
B2-5	PILE DETAILS CLASS 90 AND CLASS 140
B3-1	RETAINING WALL TYPE 1 H=4' THROUGH 30'
B3-8	RETAINING WALL DETAILS No. 1
RSP B6-21	JOINT SEALS (MAXIMUM MOVEMENT RATING = 2")
B11-55	CONCRETE BARRIER TYPE 732

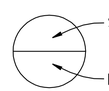

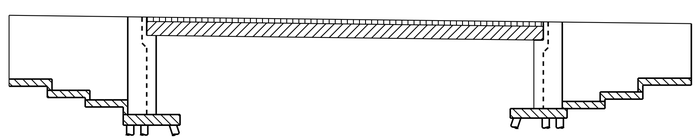

Structural Concrete, Bridge (4000 psi @ 28 days)

Structural Concrete, Bridge

Structural Concrete, Bridge Footing

Precast Prestressed Concrete I Girders

CONCRETE STRENGTH AND TYPE LIMITS

No Scale

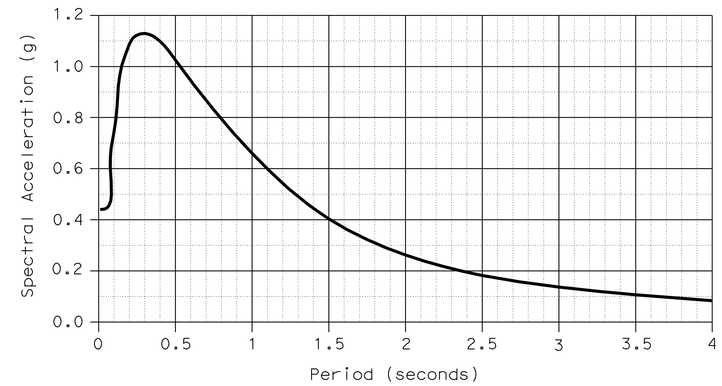

HORIZONTAL ARS CURVE

LOAD AND RESISTANCE FACTOR DESIGN

DESIGN: AASHTO LRFD BRIDGE DESIGN SPECIFICATIONS, 3rd Edition with 2006 Interims and CALTRANS Amendments, V3.06.01.

SEISMIC DESIGN: Caltrans Seismic Design Criteria (SDC) Version 1.4, July, 2006.

DEAD LOAD: Includes 35 Psf for future wearing surface.

LIVE LOADING: HL93 with alternative and permit design load.

SEISMIC LOADING: CALTRANS SDC ARS Curve for Soil Profile Type D (M = 7.5±0.25), (Peak Rock Acceleration = 0.4g).

REINFORCED CONCRETE:
f_y = 60 ksi
f'_c = 3600 psi, unless otherwise noted
n = 8

Transverse Deck Slabs (Working Stress Design)
f_s = 60 ksi
f'_c = 3600 psi, unless otherwise noted
n = 10

PRESTRESSED CONCRETE: See "PRESTRESSING NOTES" on PRECAST PRESTRESSED I GIRDER (LRFD) sheet.

	BY	CHECKED
DESIGN	D. Azzam	H. Vu
DETAILS	R. Kirkland	H. Vu
QUANTITIES	D. Azzam	R. Anderson

STATE OF CALIFORNIA
DEPARTMENT OF TRANSPORTATION

DIVISION OF ENGINEERING SERVICES
STRUCTURE DESIGN
DESIGN BRANCH 10

BRIDGE NO. 56-0384
POST MILE 16.6

MADISON STREET UC (WIDEN)
INDEX TO PLANS

STRUCTURES DESIGN DETAIL SHEET (ENGLISH) (REV. 10/25/05)

ORIGINAL SCALE IN INCHES FOR REDUCED PLANS 0 1 2 3

CU 08
EA 448401

DISREGARD PRINTS BEARING EARLIER REVISION DATES 4/28/10 6-25-10

REVISION DATES

SHEET 2 OF 17

FILE => 560384aitp02.dgn

USERNAME => rtrim DATE PLOTTED => 30-APR-2011 TIME PLOTTED => 14:44

DIST	COUNTY	ROUTE	POST MILES TOTAL PROJECT	SHEET No	TOTAL SHEETS
08	Riv	91	15.6/21.6	1736	2028

REGISTERED CIVIL ENGINEER 11-30-10 DATE

4-25-11
PLANS APPROVAL DATE

REGISTERED PROFESSIONAL ENGINEER HUAN VU No. 60696 Exp. 12-31-10 CIVIL STATE OF CALIFORNIA

The State of California or its officers or agents shall not be responsible for the accuracy or completeness of electronic copies of this plan sheet.

Bridge Location

1 - 55.001 Rt. ℄ Rte 91, Sta 197+73.200, Elev 868.044
2 - 54.951 Rt. ℄ Rte 91, Sta 198+57.140, Elev 868.589
3 - 54.805 Lt. ℄ Rte 91, Sta 198+57.080, Elev 868.661
4 - 54.847 Lt. ℄ Rte 91, Sta 197+73.080, Elev 868.099

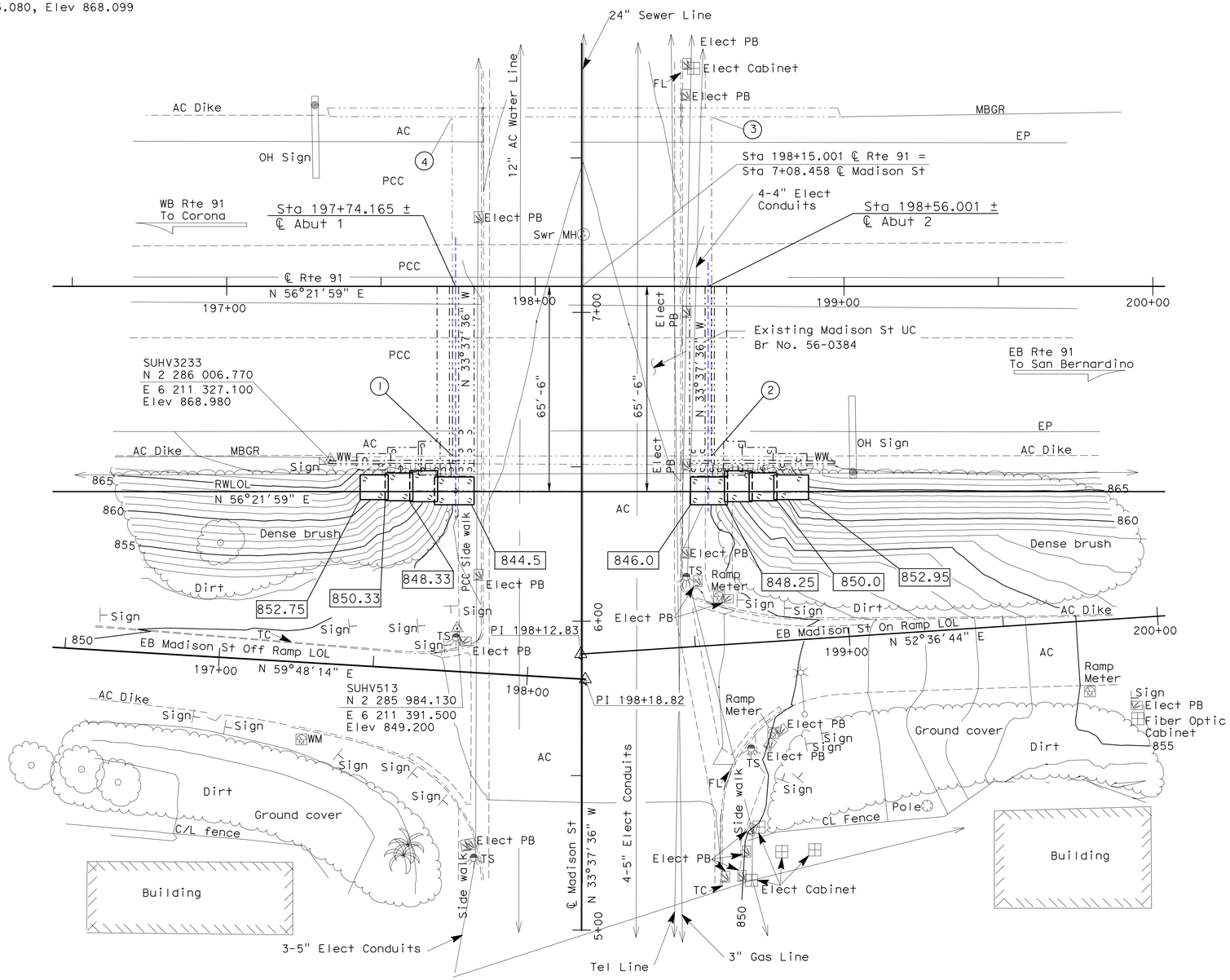

NOTES:

1. Underground utilities as shown are approximate See "ROAD PLANS" for more details.
2. All Piles not shown.

LEGEND:

Indicates Bottom of footing elevation

Indicates existing bridge construction

Indicates new bridge construction

SURVEY CONTROL

SUHV3233

Fd: 2" Br. Disk "Ca. Dept"
56.262 Rt. ℄ Rte 91
Sta 197+33.600
N 2 286 006.770
E 6 211 327.100
Elev 868.980

SUHV513

Fd: PK/CT Washer/ AC SW Madison
110.782 Rt. ℄ Rte 91
Sta 197+74.680
N 2 285 984.130
E 6 211 391.500
Elev 849.200

NOTE:
THE CONTRACTOR SHALL VERIFY ALL CONTROLLING FIELD DIMENSIONS BEFORE ORDERING OR FABRICATING ANY MATERIAL.

PRELIMINARY INVESTIGATION SECTION

SCALE	VERT.DATUM NAVD88	PHOTOGRAMMETRY AS OF: X			
1:20	HORZ.DATUM NAD83	SURVEYED	BY T. Phung/C. Stewart	CHECKED	BY E. Viajar
ALIGNMENT TIES Dist Traverse Sheets		DRAFTED	BY C. Pham	CHECKED	BY E. Viajar

	BY	CHECKED
DESIGN	D. Azzam	H. Vu
DETAILS	R. Kirkland	H. Vu
QUANTITIES	T. Sanderson	R. Anderson

STATE OF CALIFORNIA
DEPARTMENT OF TRANSPORTATION

DIVISION OF ENGINEERING SERVICES
STRUCTURE DESIGN
DESIGN BRANCH 10

BRIDGE NO. 56-0384
POST MILE 16.65

MADISON ST UC (WIDEN)
FOUNDATION PLAN

STRUCTURES FOUNDATION PLAN SHEET (ENGLISH) (REV. 10/25/05)

ORIGINAL SCALE IN INCHES FOR REDUCED PLANS 0 1 2 3

CU 08
EA 448401

DISREGARD PRINTS BEARING EARLIER REVISION DATES

REVISION DATES: 6/09/08 07/03/08 4/12/10 6/25/10

SHEET 3 OF 17

FILE => 560384efdp103.dgn

USERNAME => trlim DATE PLOTTED => 30-APR-2011 TIME PLOTTED => 14:45

DIST	COUNTY	ROUTE	POST MILES TOTAL PROJECT	SHEET No	TOTAL SHEETS
08	Riv	91	15.6/21.6	1737	2028

REGISTERED CIVIL ENGINEER 11-30-10 DATE

4-25-11
PLANS APPROVAL DATE

REGISTERED PROFESSIONAL ENGINEER HUAN VU No. 60696 Exp. 12-31-10 CIVIL STATE OF CALIFORNIA

The State of California or its officers or agents shall not be responsible for the accuracy or completeness of electronic copies of this plan sheet.

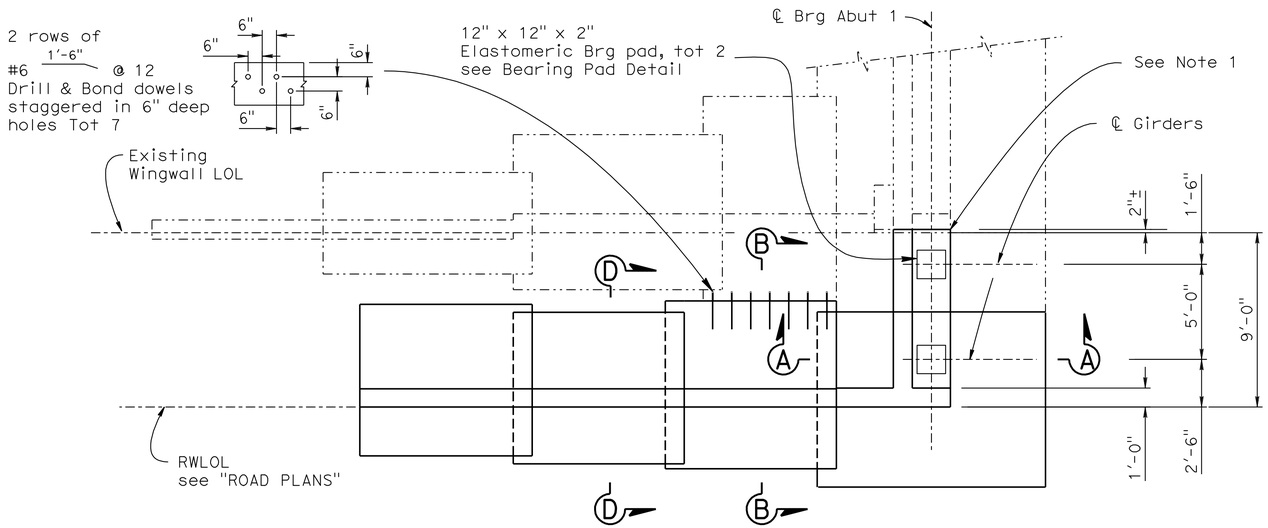

ABUTMENT PLAN VIEW

ABUTMENT NO.1 SHOWN, ABUTMENT NO.2 SIMILAR

1/4 " = 1'-0"

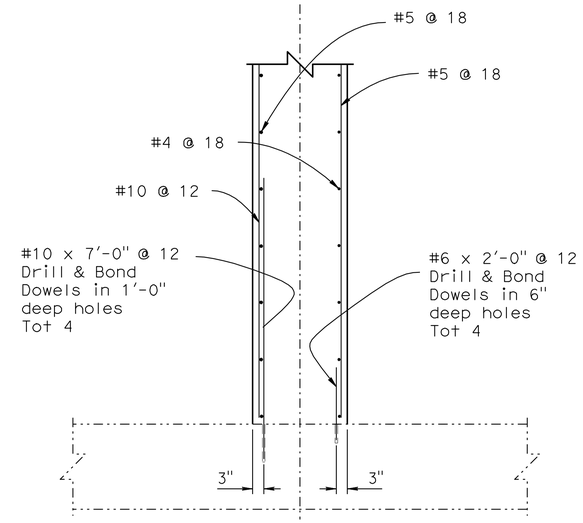

SECTION C-C

1/2" = 1'-0"

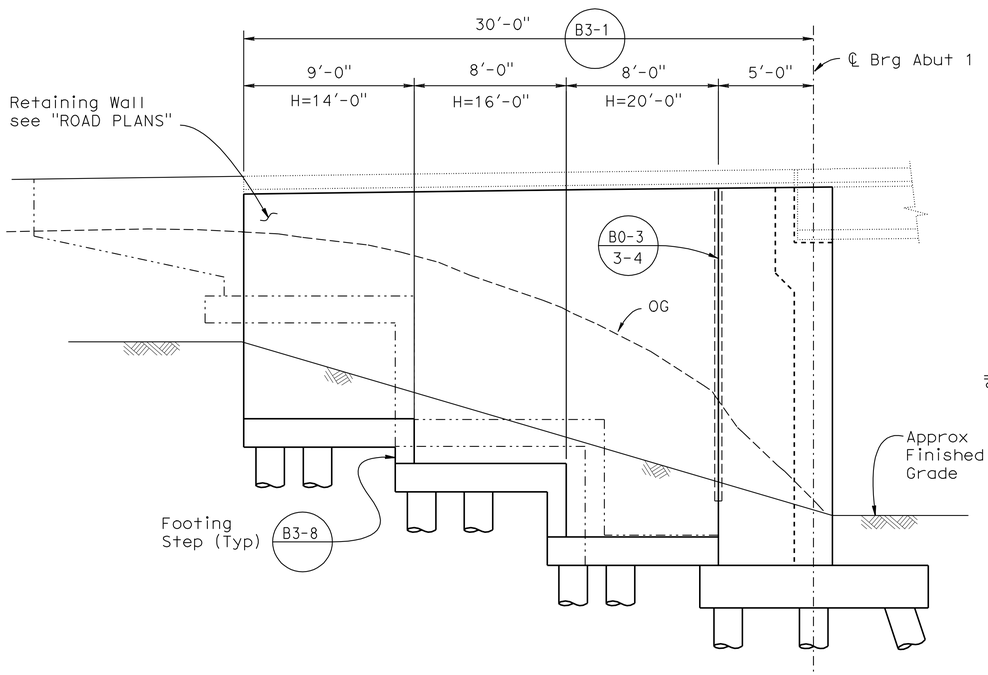

ABUTMENT WING WALL ELEVATON

ABUTMENT NO.1 SHOWN, ABUTMENT NO.2 SIMILAR

1/4 " = 1'-0"

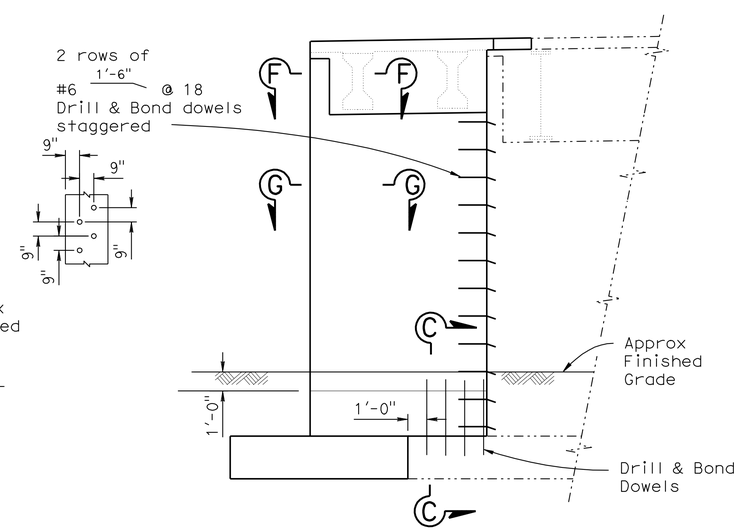

ELEVATION

1/4" = 1'-0"

NOTES:

1. Existing front face of Abutment and new front face of Abutment should be matched on same line
2. For "SECTION A-A", see "ABUTMENT DETAILS NO. 1" sheet.
3. For removal of existing structure see "BRIDGE REMOVAL" sheet.
4. For Pile layout see "ABUTMENT DETAILS NO. 1" sheet.
5. For Bearing Pad Detail and "SECTION B-B", "SECTION D-D", "SECTION F-F" and "SECTION G-G", see "ABUTMENT DETAILS NO. 2" sheet.

LEGEND:

Indicates existing structure

Indicates new construction

NOTE:
THE CONTRACTOR SHALL VERIFY ALL CONTROLLING FIELD DIMENSIONS BEFORE ORDERING OR FABRICATING ANY MATERIAL.

	BY	CHECKED
DESIGN	D. Azzam	H. Vu
DETAILS	R. Kirkland/D.Wooten	H. Vu
QUANTITIES	D. Azzam	R. Anderson

STATE OF CALIFORNIA
DEPARTMENT OF TRANSPORTATION

DIVISION OF ENGINEERING SERVICES
STRUCTURE DESIGN
DESIGN BRANCH 10

BRIDGE NO. 56-0384
POST MILE 16.6

MADISON STREET UC (WIDEN)
ABUTMENT LAYOUT

STRUCTURES DESIGN DETAIL SHEET (ENGLISH) (REV. 10/25/05)

ORIGINAL SCALE IN INCHES FOR REDUCED PLANS 0 1 2 3

CU 08
EA 448401

DISREGARD PRINTS BEARING EARLIER REVISION DATES 7/05/09 6-25-10

REVISION DATES

SHEET 4 OF 17

FILE => 560384fa1_lo04.dgn

USERNAME => trlim DATE PLOTTED => 30-APR-2011 TIME PLOTTED => 14:45

DIST	COUNTY	ROUTE	POST MILES TOTAL PROJECT	SHEET No	TOTAL SHEETS
08	Riv	91	15.6/21.6	1738	2028

REGISTERED CIVIL ENGINEER 11-30-10 DATE

4-25-11
PLANS APPROVAL DATE

REGISTERED PROFESSIONAL ENGINEER HUAN VU No. 60696 Exp. 12-31-10 CIVIL STATE OF CALIFORNIA

The State of California or its officers or agents shall not be responsible for the accuracy or completeness of electronic copies of this plan sheet.

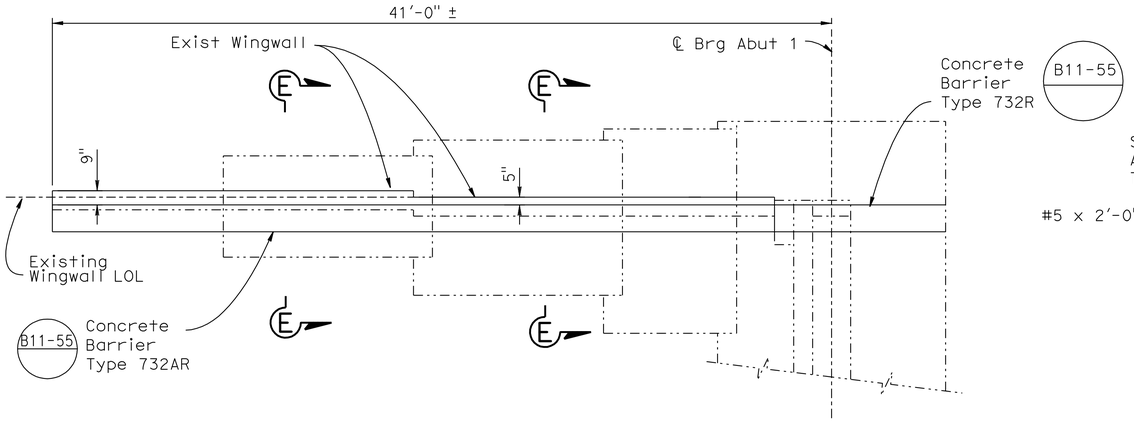

ABUTMENT LEFT WINGWALL PLAN VIEW

ABUTMENT NO.1 SHOWN, ABUTMENT NO.2 SIMILAR

1/4 " = 1'-0"

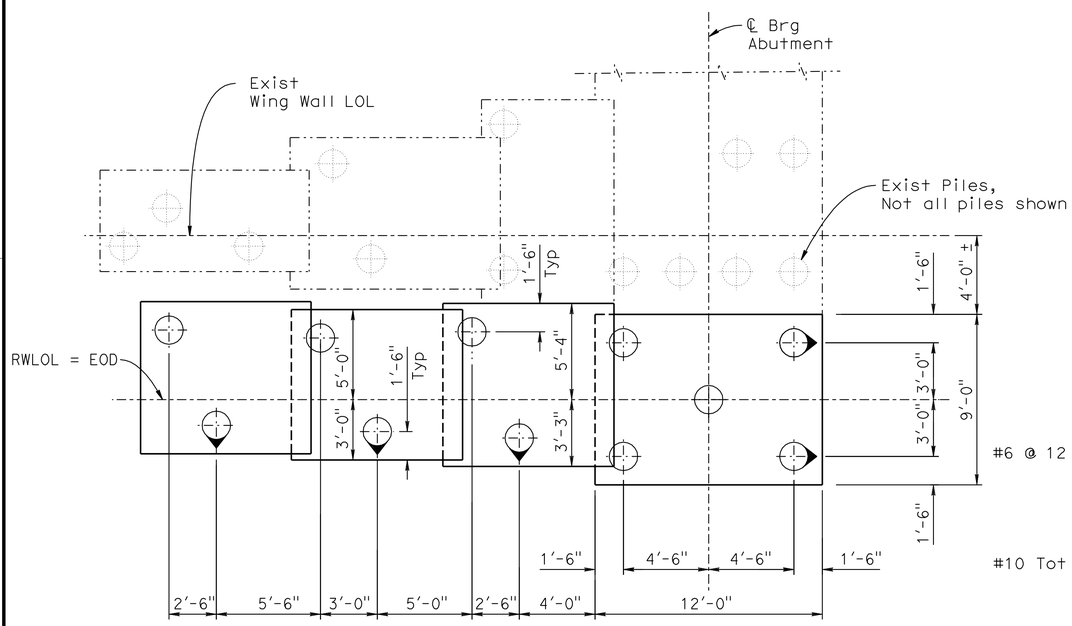

FOOTING LAYOUT

1/4" = 1'-0"

Note:
Abutment No. 1 shown, Abutment No. 2 is similar.

LEGEND:

- Indicates vertical driven concrete pile
- Indicates battered driven concrete pile
- Indicates existing construction
- Indicates new construction

NOTE:
THE CONTRACTOR SHALL VERIFY ALL CONTROLLING FIELD DIMENSIONS BEFORE ORDERING OR FABRICATING ANY MATERIAL.

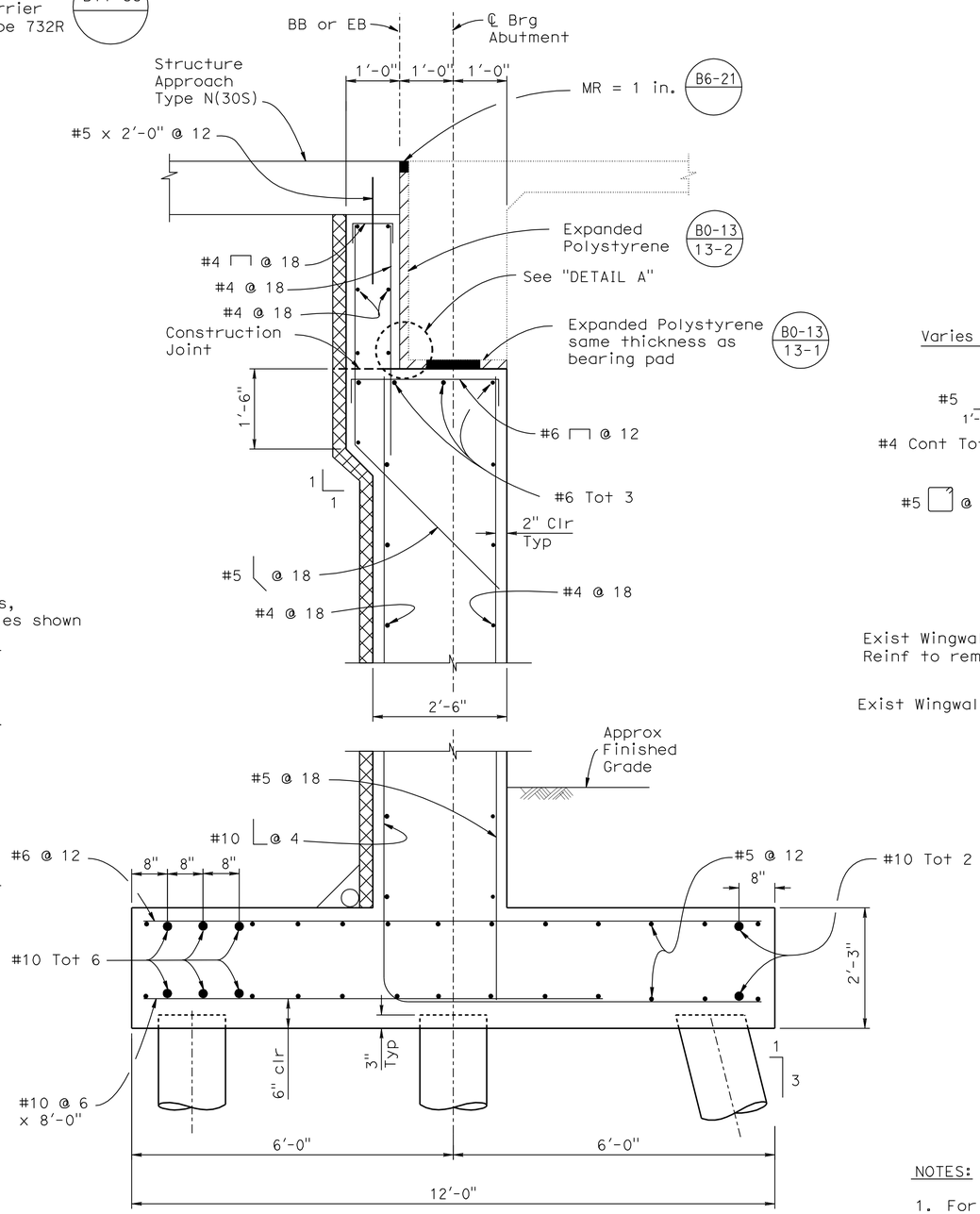

SECTION A-A

3/4" = 1'-0"

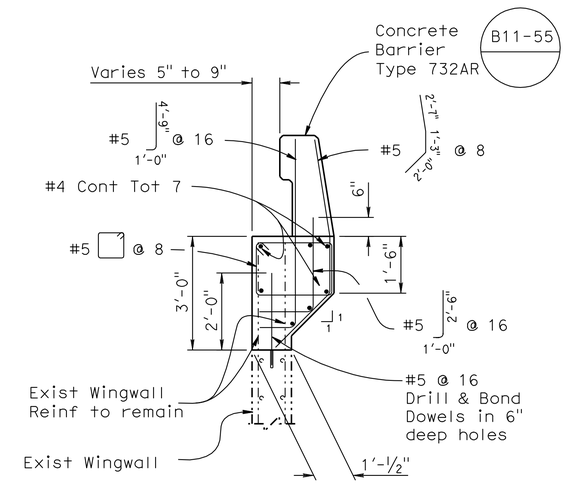

SECTION E-E

1/2" = 1'-0"

NOTES:

1. For "DETAIL A", see "ABUTMENT DETAILS NO. 2" sheet

DESIGN	BY D. Azzam	CHECKED H. Vu	
DETAILS	BY R. Kirkland/D.Wooten	CHECKED H. Vu	
QUANTITIES	BY D. Azzam	CHECKED R. Anderson	

STATE OF CALIFORNIA
DEPARTMENT OF TRANSPORTATION

DIVISION OF ENGINEERING SERVICES
STRUCTURE DESIGN
DESIGN BRANCH 10

BRIDGE NO. 56-0384
POST MILE 16.6

MADISON STREET UC (WIDEN)
ABUTMENT DETAILS NO. 1

STRUCTURES DESIGN DETAIL SHEET (ENGLISH) (REV. 10/25/05)

ORIGINAL SCALE IN INCHES FOR REDUCED PLANS 0 1 2 3

CU 08
EA 448401

DISREGARD PRINTS BEARING EARLIER REVISION DATES

REVISION DATES: 5/15/09 6-25-10 10-05-10

SHEET 5 OF 17

FILE => 560384fadt05.dgn

USERNAME => rtrim DATE PLOTTED => 30-APR-2011 TIME PLOTTED => 14:45

DIST	COUNTY	ROUTE	POST MILES TOTAL PROJECT	SHEET No	TOTAL SHEETS
08	Riv	91	15.6/21.6	1739	2028

REGISTERED CIVIL ENGINEER 11-30-10 DATE

4-25-11
PLANS APPROVAL DATE

The State of California or its officers or agents shall not be responsible for the accuracy or completeness of electronic copies of this plan sheet.

REGISTERED PROFESSIONAL ENGINEER HUAN VU No. 60696 Exp. 12-31-10 CIVIL STATE OF CALIFORNIA

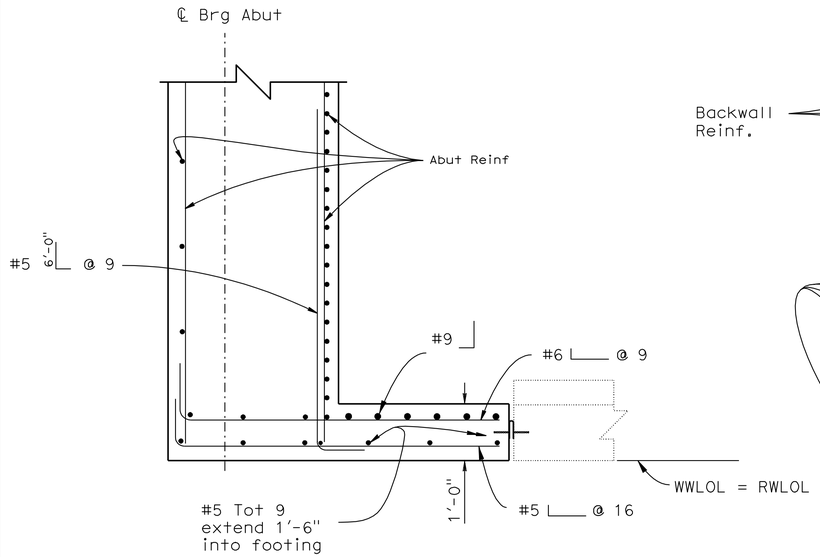

SECTION G-G

3/4" = 1'-0"

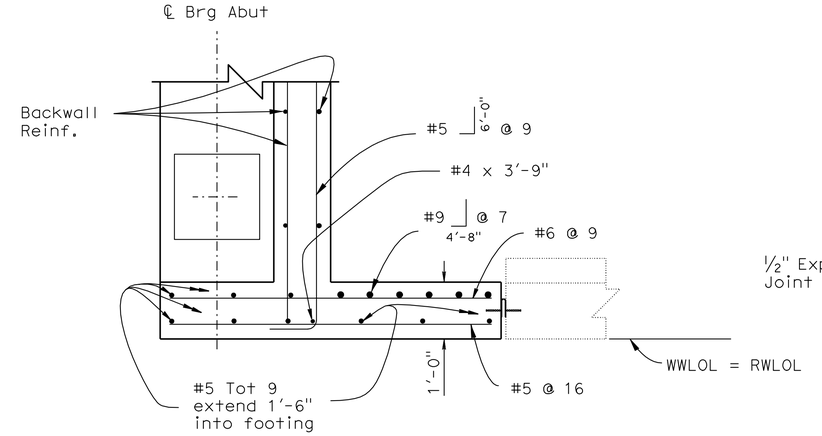

SECTION F-F

3/4" = 1'-0"

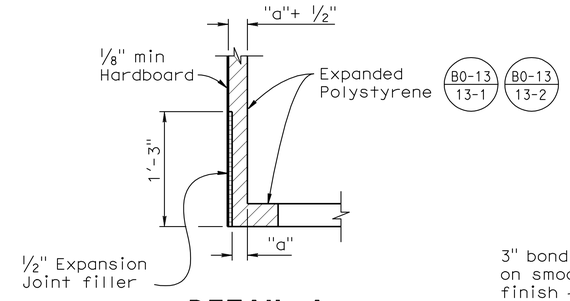

DETAIL A

No Scale

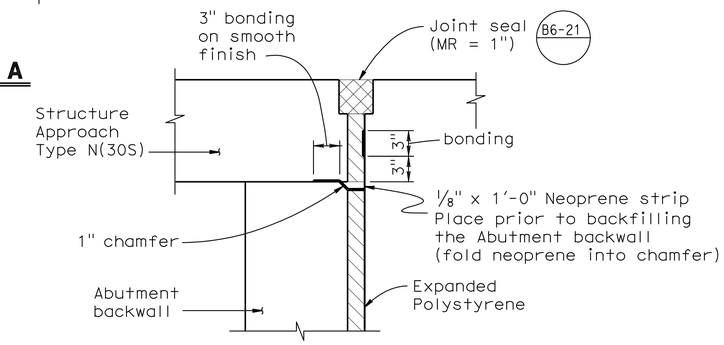

JOINT PROTECTION DETAIL

No Scale

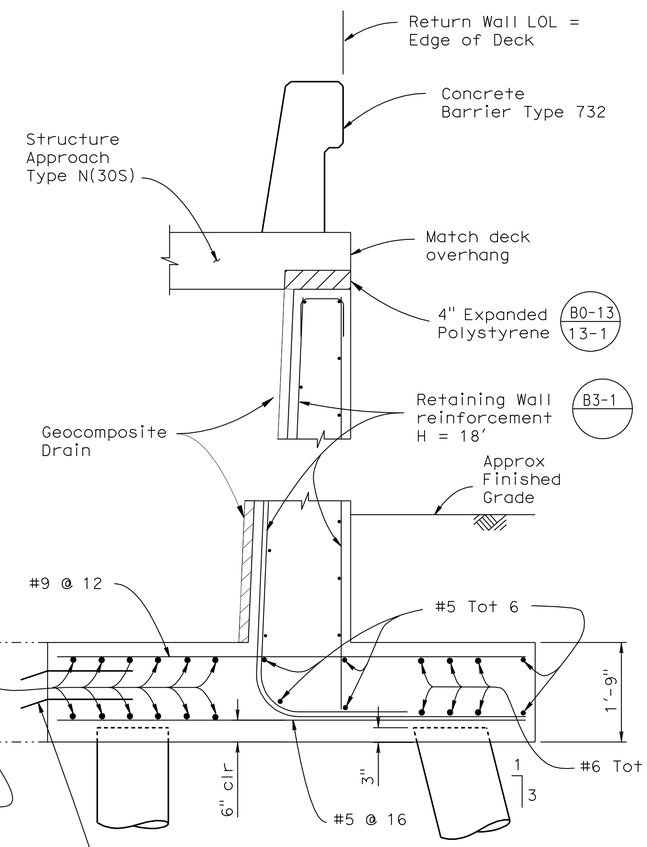

SECTION B-B

3/4" = 1'-0"

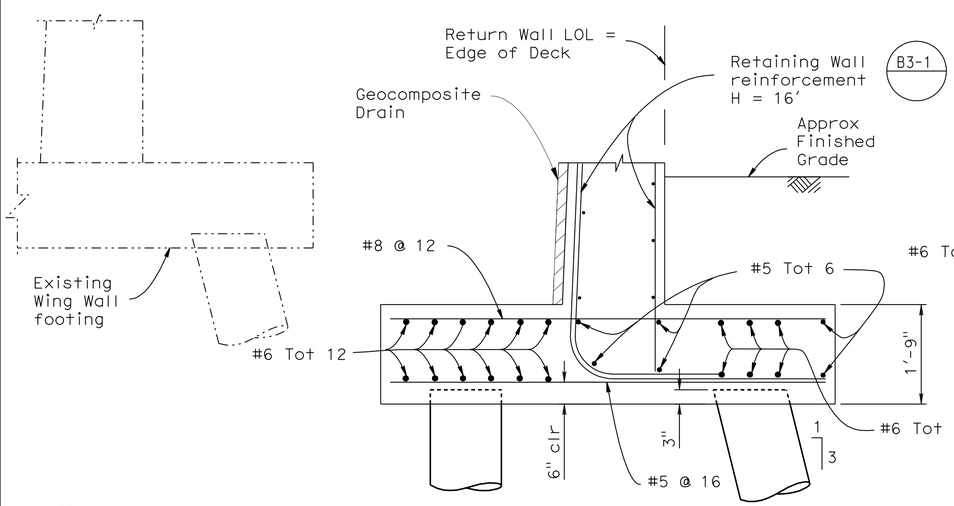

SECTION D-D

3/4" = 1'-0"

NOTE:
THE CONTRACTOR SHALL VERIFY ALL CONTROLLING FIELD DIMENSIONS BEFORE ORDERING OR FABRICATING ANY MATERIAL.

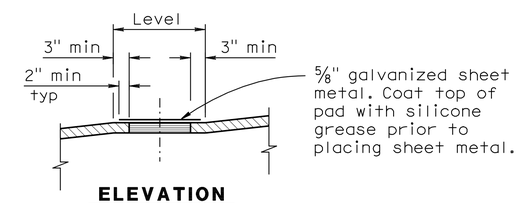

ELEVATION

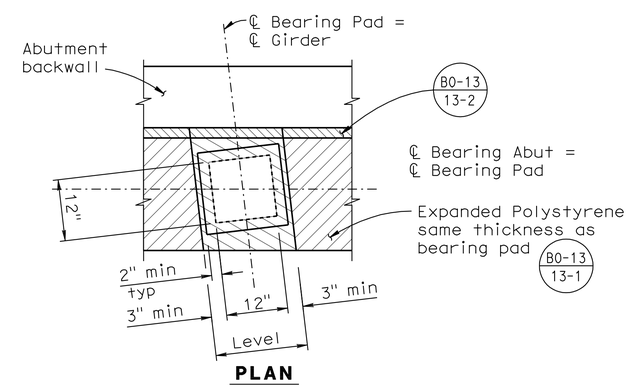

PLAN

BEARING PAD DETAIL

No Scale

NOTES:

1. For location of "DETAIL A" see "ABUTMENT DETAILS NO. 1" sheet

DESIGN	BY D. Azzam	CHECKED H. Vu	
DETAILS	BY R. Kirkland	CHECKED H. Vu	
QUANTITIES	BY D. Azzam	CHECKED R. Anderson	

STATE OF CALIFORNIA
DEPARTMENT OF TRANSPORTATION

DIVISION OF ENGINEERING SERVICES
STRUCTURE DESIGN
DESIGN BRANCH 10

BRIDGE NO. 56-0384
POST MILE 16.6

MADISON STREET UC (WIDEN)
ABUTMENT DETAILS NO. 2

STRUCTURES DESIGN DETAIL SHEET (ENGLISH) (REV. 10/25/05)

ORIGINAL SCALE IN INCHES FOR REDUCED PLANS 0 1 2 3

CU 08
EA 448401

DISREGARD PRINTS BEARING EARLIER REVISION DATES

REVISION DATES: 7/01/09 6-25-10

SHEET 6 OF 17

FILE => 560384fadt06.dgn

USERNAME => trflm DATE PLOTTED => 30-APR-2011 TIME PLOTTED => 14:45

DIST	COUNTY	ROUTE	POST MILES TOTAL PROJECT	SHEET No	TOTAL SHEETS
08	Riv	91	15.6/21.6	1740	2028

REGISTERED CIVIL ENGINEER 11-30-10 DATE

4-25-11
PLANS APPROVAL DATE

REGISTERED PROFESSIONAL ENGINEER HUAN VU No. 60696 Exp. 12-31-10 CIVIL STATE OF CALIFORNIA

The State of California or its officers or agents shall not be responsible for the accuracy or completeness of electronic copies of this plan sheet.

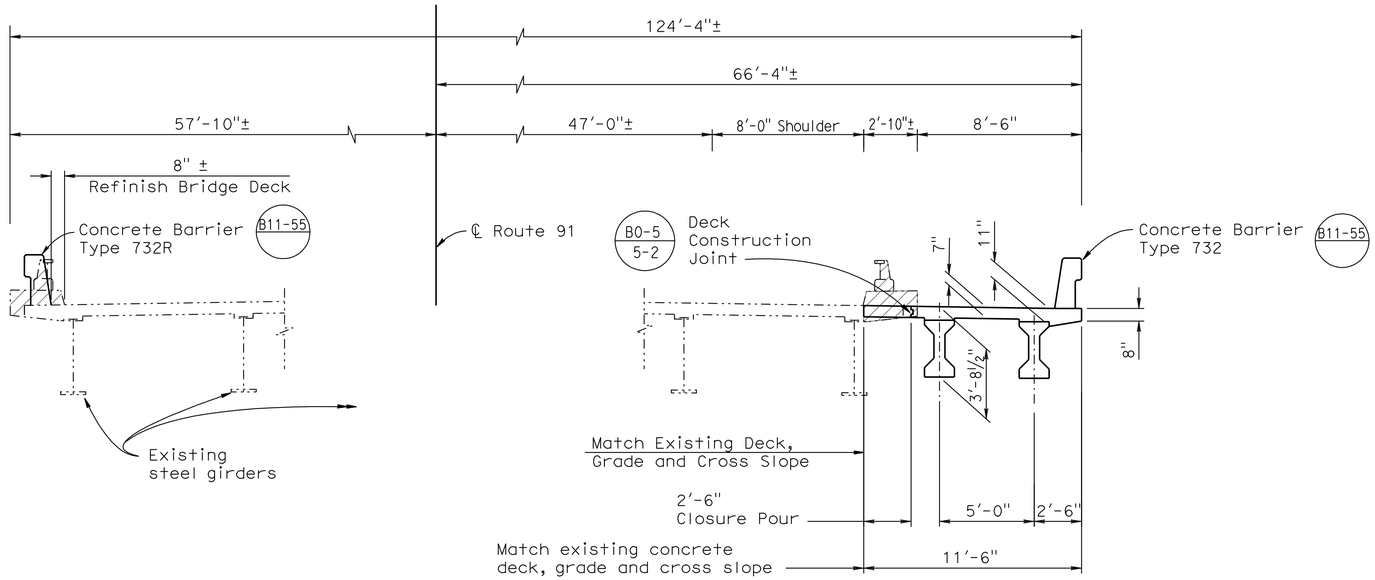

TYPICAL SECTION

¼" = 1'-0"

NOTE:

1. Closure pour concrete shall be poured after 10 days from the adjacent concrete pour.

LEGEND:

- Denotes existing construction
- Denotes new construction
- Denotes limits of bridge removal (Portion)

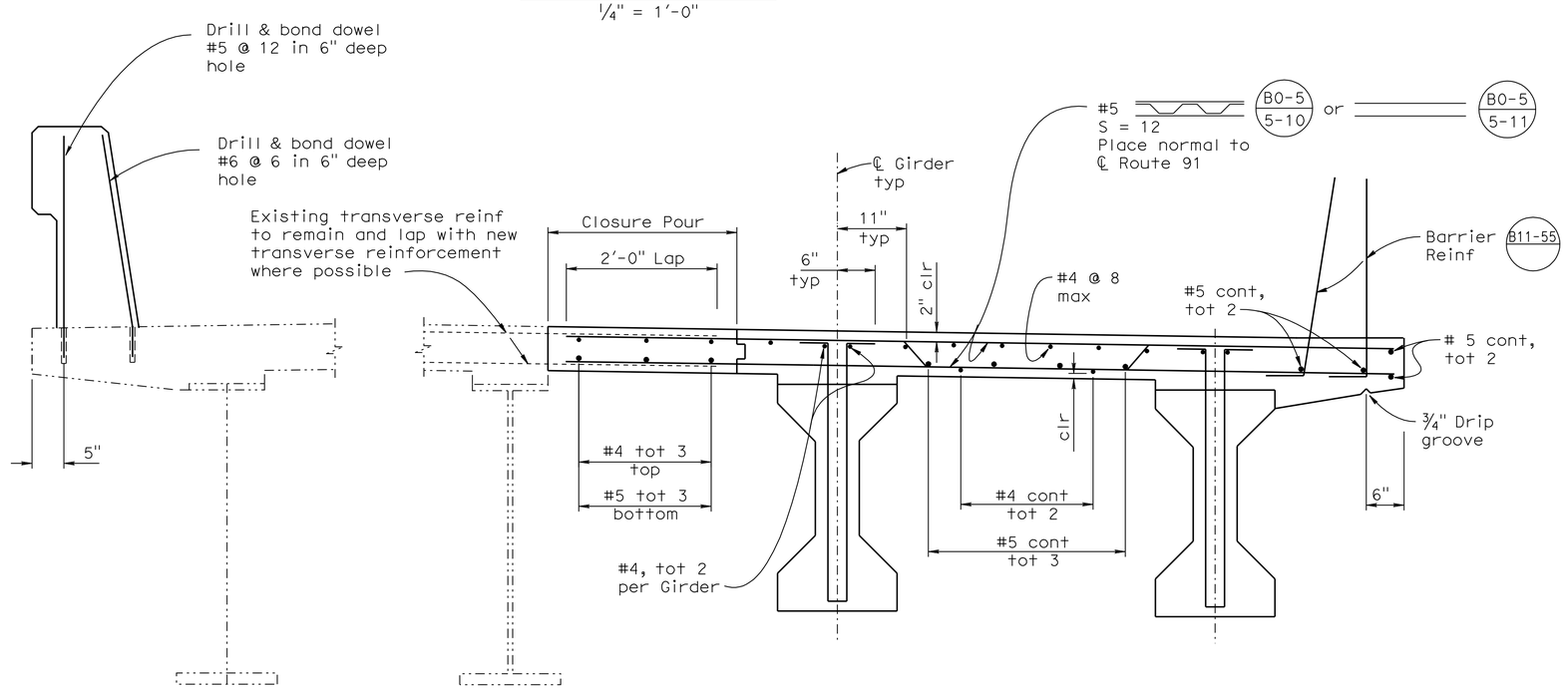

NOTE:
THE CONTRACTOR SHALL VERIFY ALL CONTROLLING FIELD DIMENSIONS BEFORE ORDERING OR FABRICATING ANY MATERIAL.

PART TYPICAL SECTION

1" = 1'-0"

DESIGN	BY D. Azzam	CHECKED H. Vu	
DETAILS	BY R. Kirkland	CHECKED H. Vu	
QUANTITIES	BY D. Azzam	CHECKED R. Anderson	

STATE OF CALIFORNIA
DEPARTMENT OF TRANSPORTATION

DIVISION OF ENGINEERING SERVICES
STRUCTURE DESIGN
DESIGN BRANCH 10

BRIDGE NO. 56-0384
POST MILE 16.6

MADISON STREET UC (WIDEN)
TYPICAL SECTION

STRUCTURES DESIGN DETAIL SHEET (ENGLISH) (REV. 10/25/05)

ORIGINAL SCALE IN INCHES FOR REDUCED PLANS 0 1 2 3

CU 08
EA 448401

DISREGARD PRINTS BEARING EARLIER REVISION DATES 6-25-10

REVISION DATES

SHEET 7 OF 17

FILE => 560384ktsd07.dgn

USERNAME => rtrim DATE PLOTTED => 30-APR-2011 TIME PLOTTED => 14:45

DIST	COUNTY	ROUTE	POST MILES TOTAL PROJECT	SHEET No	TOTAL SHEETS
08	Riv	91	15.6/21.6	1741	2028

REGISTERED CIVIL ENGINEER 11-30-10 DATE

4-25-11
PLANS APPROVAL DATE

REGISTERED PROFESSIONAL ENGINEER HUAN VU No. 60696 Exp. 12-31-10 CIVIL STATE OF CALIFORNIA

The State of California or its officers or agents shall not be responsible for the accuracy or completeness of electronic copies of this plan sheet.

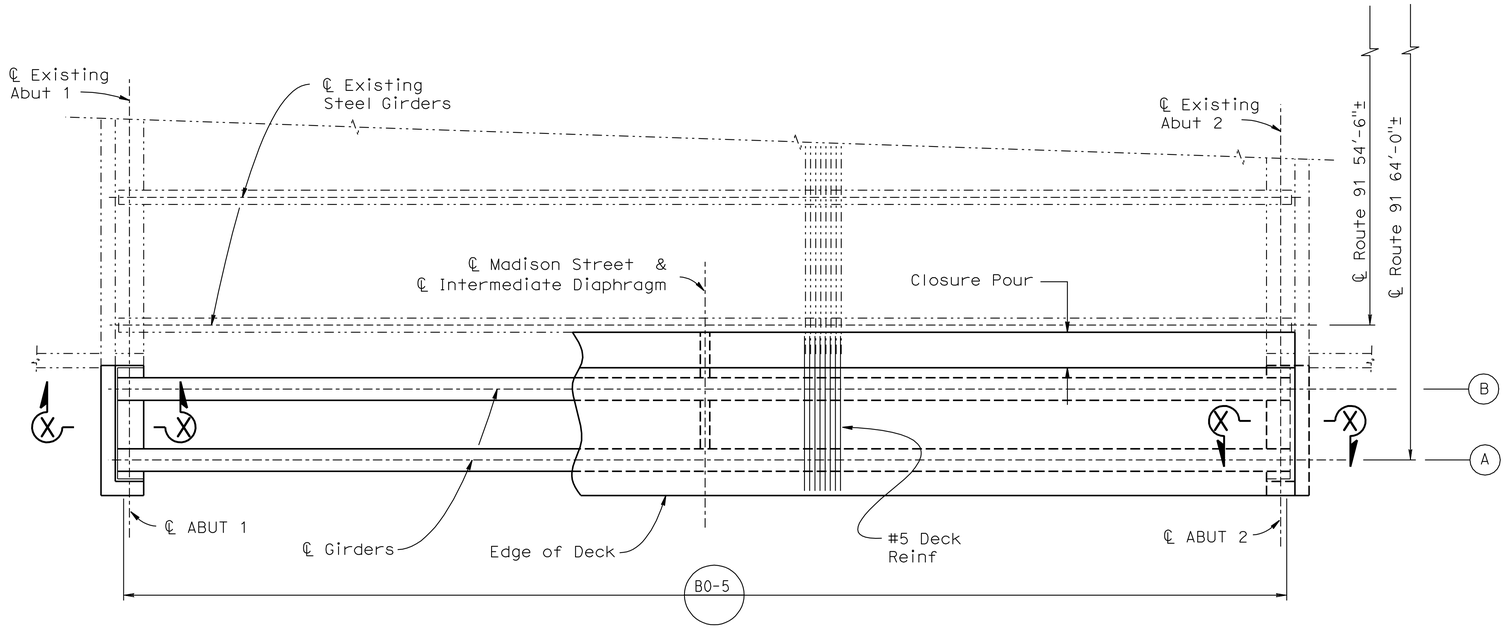

GIRDER LAYOUT

3/16" = 1'-0"

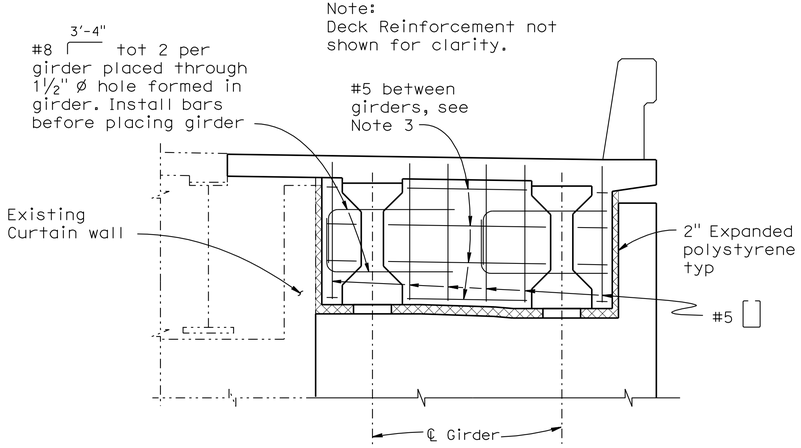

END DIAPHRAGM ELEVATION

½" = 1'-0"

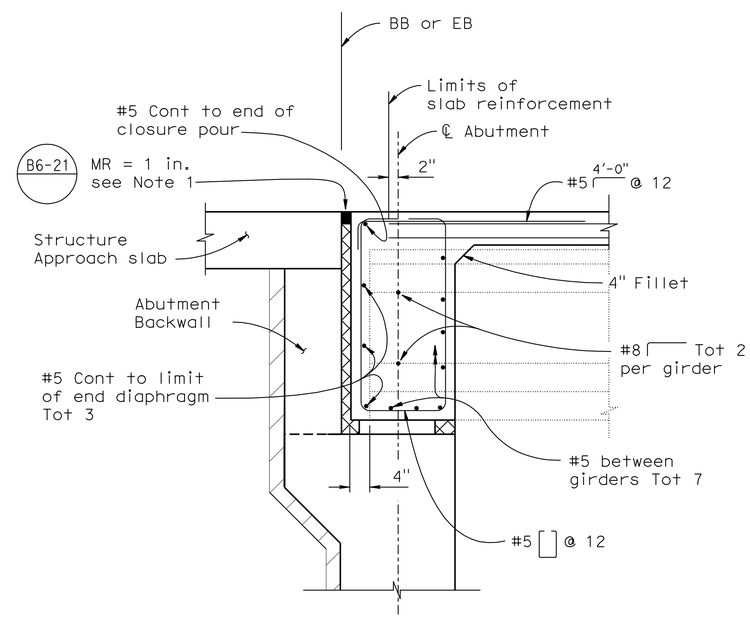

SECTION X-X

¾" = 1'-0"

NOTES:

1. Splice new joint seal with existing joint seal.
2. For information not shown, see "PRECAST PRESTRESSED I GIRDER" sheet.
3. For bars located at exterior girders, adjust accordingly to fit.

LEGEND:

-·-·-·-·- Denotes existing construction

——— Denotes new construction

NOTE:
THE CONTRACTOR SHALL VERIFY ALL CONTROLLING FIELD DIMENSIONS BEFORE ORDERING OR FABRICATING ANY MATERIAL.

	BY	CHECKED
DESIGN	D. Azzam	H. Vu
DETAILS	R. Kirkland	H. Vu
QUANTITIES	D. Azzam	R. Anderson

STATE OF CALIFORNIA DEPARTMENT OF TRANSPORTATION

DIVISION OF ENGINEERING SERVICES STRUCTURE DESIGN DESIGN BRANCH 10

BRIDGE NO. 56-0384
POST MILE 16.6

MADISON STREET UC (WIDEN)
GIRDER LAYOUT

STRUCTURES DESIGN DETAIL SHEET (ENGLISH) (REV. 10/25/05)

ORIGINAL SCALE IN INCHES FOR REDUCED PLANS 0 1 2 3

CU 08
EA 448401

DISREGARD PRINTS BEARING EARLIER REVISION DATES 6-25-10 10-05-10

REVISION DATES

SHEET 8 OF 17

FILE => 560384lgdt08.dgn

USERNAME => trilim DATE PLOTTED => 30-APR-2011 TIME PLOTTED => 14:45

DIST.	COUNTY	ROUTE	POST MILES TOTAL PROJECT	SHEET NO.	TOTAL SHEETS
08	Riv	91	15.6/21.6	1742	2028

REGISTERED ENGINEER - CIVIL 11-30-10

4-25-11
PLANS APPROVAL DATE

REGISTERED PROFESSIONAL ENGINEER HUAN VU No. 60696 Exp. 12-31-10 CIVIL STATE OF CALIFORNIA

The State of California or its officers or agents shall not be responsible for the accuracy or completeness of electronic copies of this plan sheet.

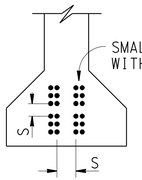

CLEARANCES FOR PRETENSIONED STRANDS

1. Strands may be bundled in groups consisting of 3 vertically, 2 horizontally and separated at the ends
2. The Min distance "S" between groups or individual strands is 1½" for ⅜" Ø strands, 1¾" for ½" Ø strands, 2" for 0.6" Ø strands
3. "S" is measured between centers of adjacent strands
4. Approval for Engineer is required for deviation

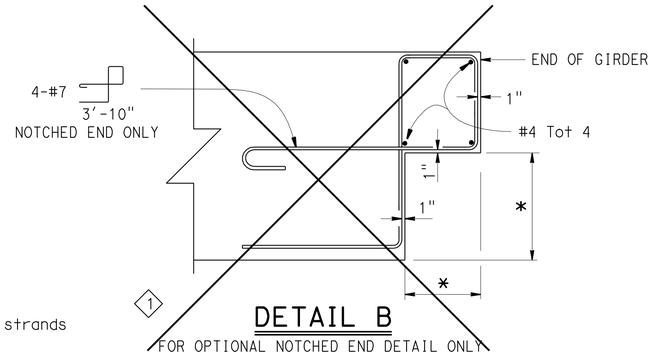

DETAIL B

FOR OPTIONAL NOTCHED END DETAIL ONLY

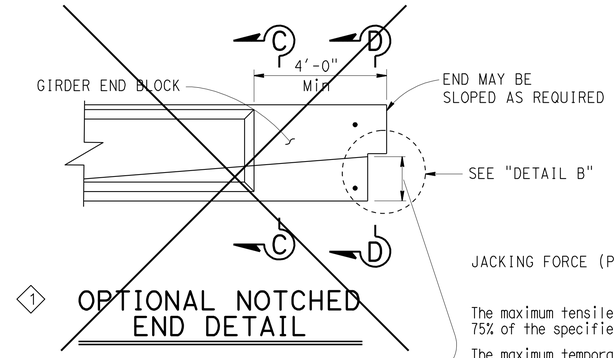

OPTIONAL NOTCHED END DETAIL

GENERAL NOTES

JACKING FORCE (P): The jacking force required at the point of control along the span. The jacking force does not include any fabrication specific losses.

The maximum tensile stress in the prestressing steel upon release shall not exceed 75% of the specified minimum ultimate tensile strength of the prestressing steel.

The maximum temporary tensile stress (jacking stress) in the prestressing steel shall not exceed 80% of the specified minimum ultimate tensile strength of the prestressing steel.

CONCRETE STRENGTH: f'ci is at time of initial stressing
f'c is at 28 days

DEFLECTION COMPONENTS: Informational - to be used in setting screed line elevations

Screed line elevations for deck concrete will be determined by the Engineer.

Contractor may interpolate "P" and "X" values between limits shown, as approved by the Engineer.

Use epoxy coated reinforcement in Environmental Area III

Girder location or designation and length	Jacking Force (P) (Kips) "X"		"Y" (in)	Concrete Strength (ksi) f'ci	f'c	Midspan Dead Load Deflection (inches) Deck	Rail
ⒶⒷ	4"	750	14	5	6	4.21	0.6
	6"	900		5.5	5	4.21	0.6

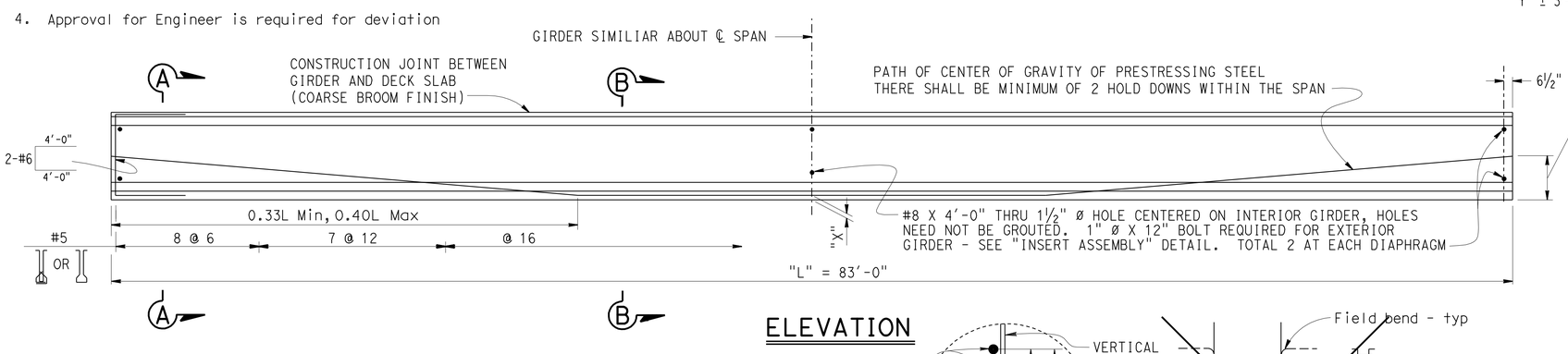

ELEVATION

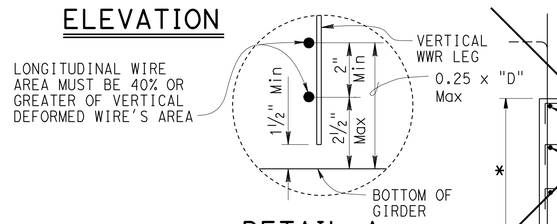

DETAIL A

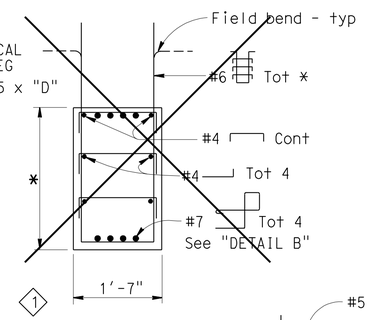

SECTION D-D

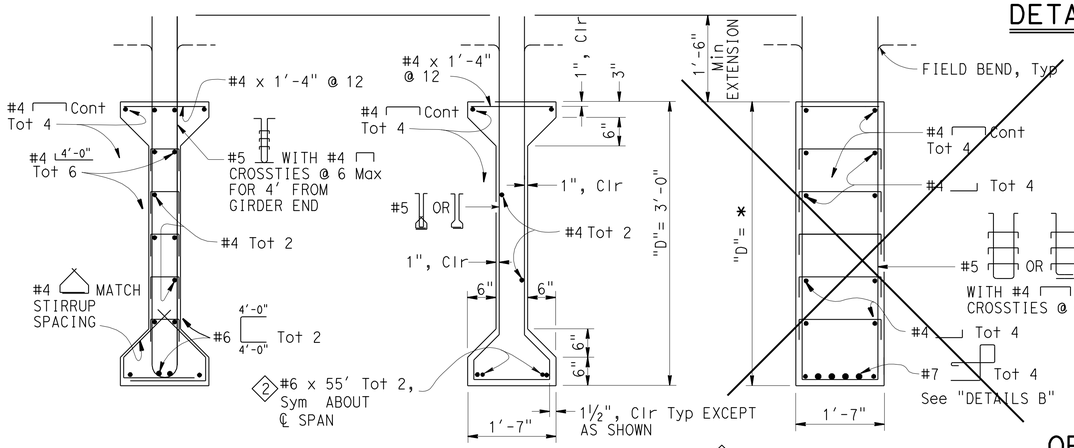

SECTION A-A

SECTION B-B

1 SECTION C-C

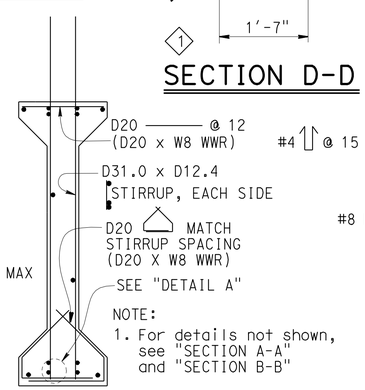

NOTE:
1. For details not shown, see "SECTION A-A" and "SECTION B-B"

OPTIONAL WELDED WIRE REINFORCEMENT (WWR) DETAIL

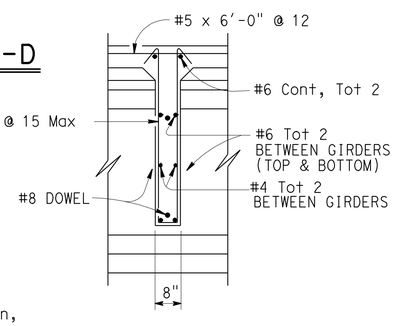

SECTION E-E

WWR NOTE: MANUFACTURER'S SHOP DRAWING SHALL CONFORM TO THE REINFORCEMENT SHOWN ON THIS SHEET AS NOTED AND THE SPECIAL PROVISIONS

#8 X 4'-0" DOWELS PLACED THROUGH 1½" Ø HOLES FORMED IN GIRDER, WHEN DIAPHRAGM IS CONTINUOUS HOLES NEED NOT BE GROUTED

1" Ø x 12" BOLTS WITH INSERT ASSEMBLIES WHEN DIAPHRAGMS ARE DISCONTINUOUS. BOLTS REQUIRED FOR EXTERIOR GIRDERS

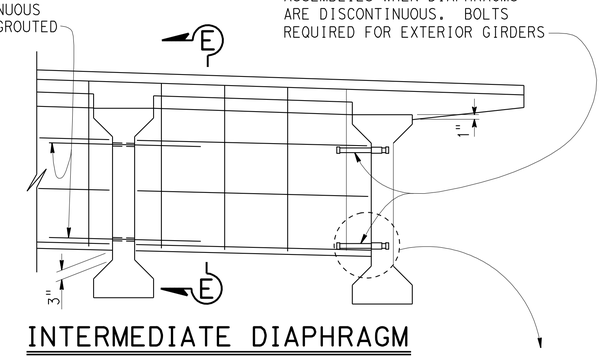

INTERMEDIATE DIAPHRAGM

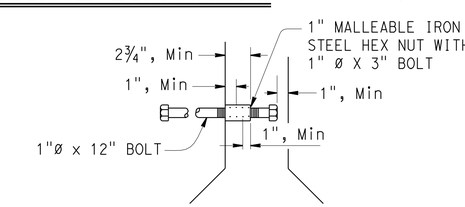

INSERT ASSEMBLY

STANDARD DRAWING

FILE NO. xs 1-120-e

APPROVED BY Jim Ma (RESPONSIBLE TECHNICAL SPECIALIST)
APPROVAL DATE 02-01-10

RELEASED BY Susan Hida (RESPONSIBLE OFFICE CHIEF)
RELEASE DATE 02-01-10

1 Detail not used
2 Revised Detail

STATE OF CALIFORNIA DEPARTMENT OF TRANSPORTATION

DIVISION OF ENGINEERING SERVICES

CU 08
EA 448401

BRIDGE NO. 56-0384
POST MILE 16.14

MADISON STREET UC (WIDEN)

PRECAST PRESTRESSED I GIRDER (LRFD)

DS OSD 2147A (ENGLISH STANDARD DRAWING "XS" BORDER REV. 01/11/08)

ORIGINAL SCALE IN INCHES FOR REDUCED PLANS 0 1 2 3

DISREGARD PRINTS BEARING EARLIER REVISION DATES

REVISION DATES (PRELIMINARY STAGE ONLY) 4/29/09 4/16/10 6-25-10

SHEET 9 OF 17

USERNAME => trlim

5603841gdt09.dgn

DATE PLOTTED => 30-APR-2011 TIME PLOTTED => 14:45

DIST	COUNTY	ROUTE	POST MILES TOTAL PROJECT	SHEET No	TOTAL SHEETS
08	Riv	91	15.6/21.6	1743	2028

REGISTERED CIVIL ENGINEER 11-30-10 DATE

4-25-11
PLANS APPROVAL DATE

REGISTERED PROFESSIONAL ENGINEER HUAN VU No. 60696 Exp. 12-31-10 CIVIL STATE OF CALIFORNIA

The State of California or its officers or agents shall not be responsible for the accuracy or completeness of electronic copies of this plan sheet.

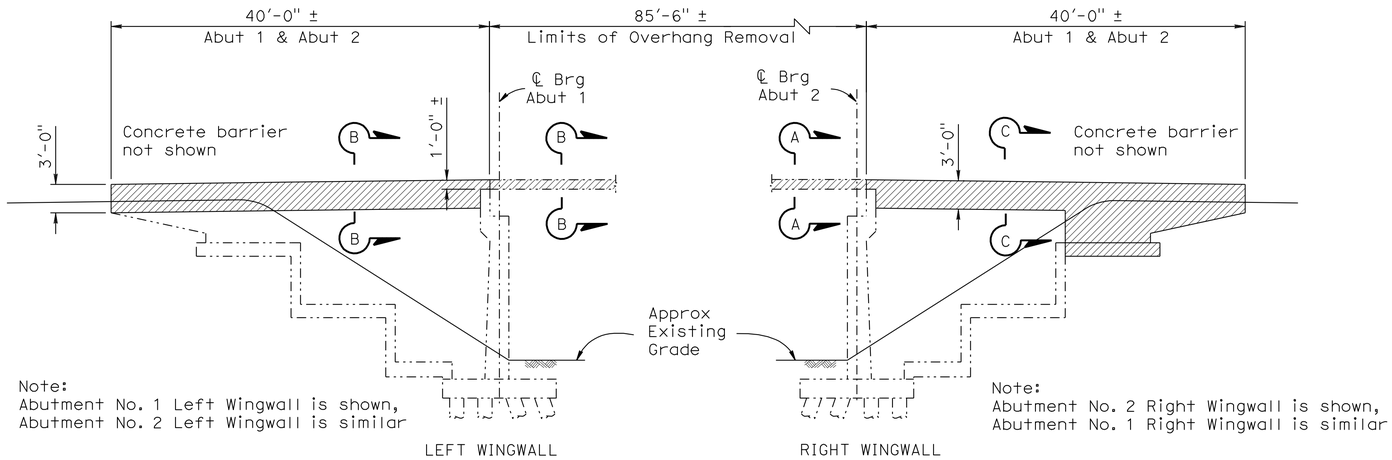

LIMITS OF REMOVAL
EXISTING BRIDGE DECK AND WINGWALLS

No Scale

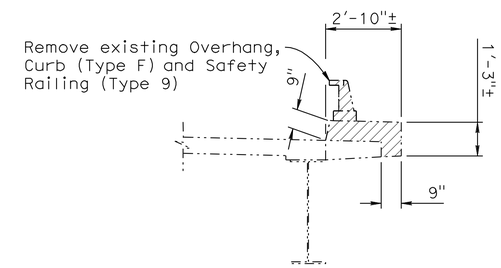

SECTION B-B

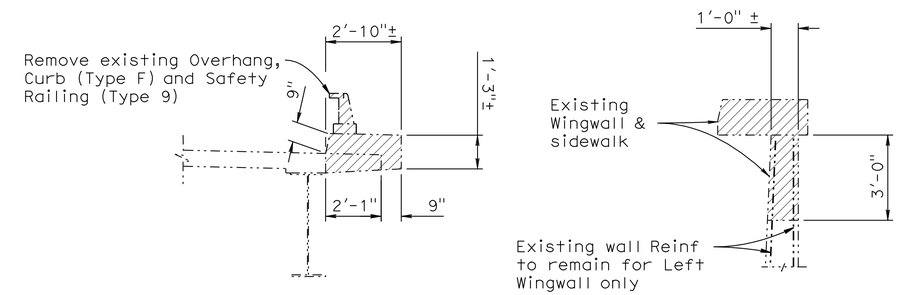

SECTION A-A

SECTION C-C

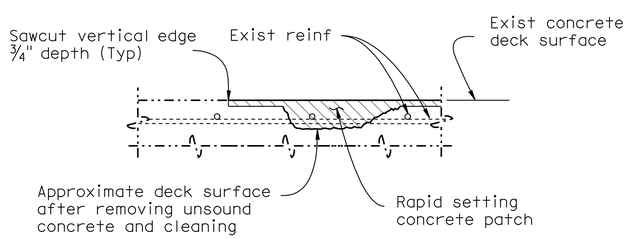

DECK REPAIR DETAIL

No Scale

Notes:

1. Approximate damaged area is 0.2% of treated area
2. Location will be determined by the engineer
3. Reinforcement may be encountered during deck concrete removal and is to remain undamaged.

LIMITS OF REMOVAL
OVERHANG, CURB (TYPE F) & SAFETY RAILING (TYPE 9)

No Scale

LEGEND:

- Denotes existing construction
- Denotes new construction
- Denotes limits of Bridge Removal (Portion)
- Denotes Deck Repair

NOTE:
THE CONTRACTOR SHALL VERIFY ALL CONTROLLING FIELD DIMENSIONS BEFORE ORDERING OR FABRICATING ANY MATERIAL.

	BY	CHECKED
DESIGN	H. Tuazon	H. Vu
DETAILS	R. Kirkland/D.Wooten	H. Vu
QUANTITIES	D. Azzam	R. Anderson

STATE OF CALIFORNIA
DEPARTMENT OF TRANSPORTATION

DIVISION OF ENGINEERING SERVICES
STRUCTURE DESIGN
DESIGN BRANCH 10

BRIDGE NO. 56-0384
POST MILE 16.6

MADISON STREET UC (WIDEN)
MISCELLANEOUS DETAILS

STRUCTURES DESIGN DETAIL SHEET (ENGLISH) (REV. 10/25/05)

ORIGINAL SCALE IN INCHES FOR REDUCED PLANS 0 1 2 3

CU 08
EA 448401

DISREGARD PRINTS BEARING EARLIER REVISION DATES

REVISION DATES: 8-25-10 9-15-10

SHEET 10 OF 17

FILE => 560384miscdt10.dgn

USERNAME => trlim DATE PLOTTED => 30-APR-2011 TIME PLOTTED => 14:46

DIST.	COUNTY	ROUTE	MILE POST TOTAL PROJECT	SHEET NO.	TOTAL SHEETS
08	Riv	91	15.6/21.6	1744	2028

REGISTERED ENGINEER - CIVIL 11-30-10

4-25-11
PLANS APPROVAL DATE

The State of California or its officers or agents shall not be responsible for the accuracy or completeness of electronic copies of this plan sheet.

REGISTERED PROFESSIONAL ENGINEER HUAN VU No. 60696 Exp. 12-31-10 CIVIL STATE OF CALIFORNIA

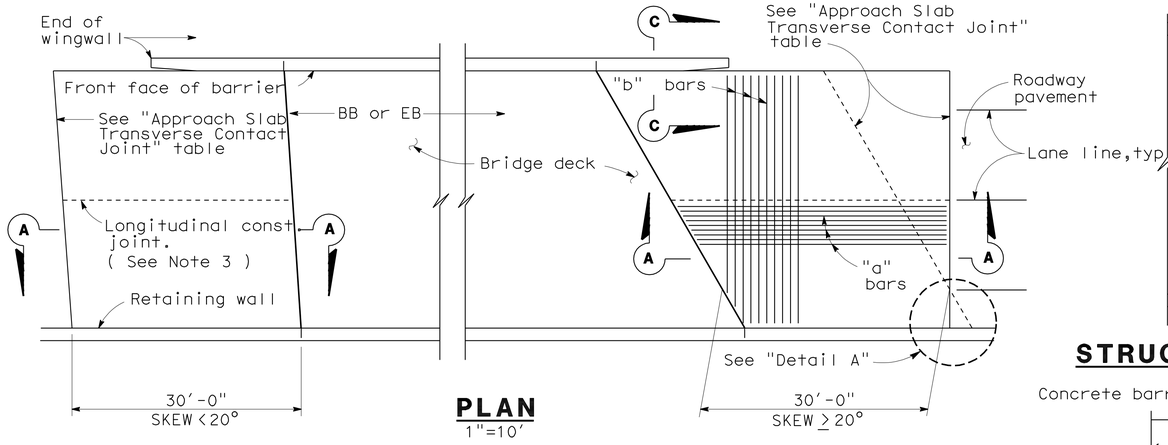

PLAN
1"=10'

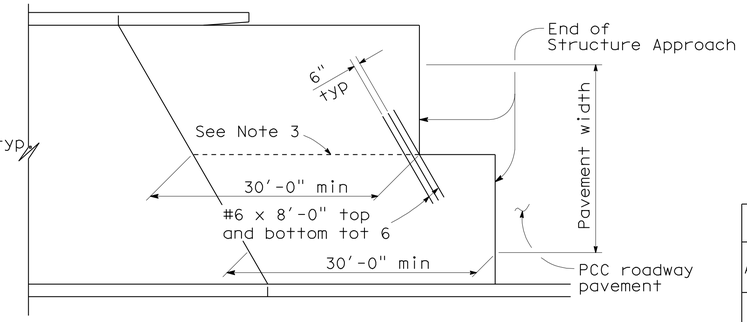

STRUCTURE APPROACH - END STAGGER DETAIL
No Scale

APPROACH SLAB TRANSVERSE CONTACT JOINT		
APPROACH SKEW	WITH AC ROADWAY PAVEMENT	WITH PCC ROADWAY PAVEMENT
< 20°	Parallel to face of paving notch	Parallel to face of paving notch
20° - 45°	Parallel to face of P N use (Detail A)	Stagger lines 24' to 36' apart.
> 45°	Parallel to face of P N use (Detail A)	Stagger at each lane line.

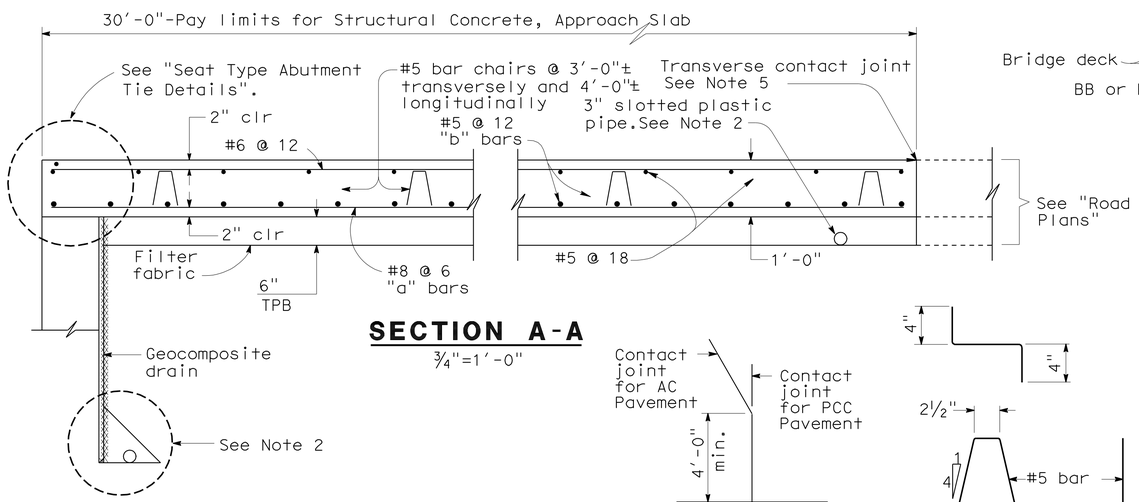

SECTION A-A
¾"=1'-0"

DETAIL A
No Scale

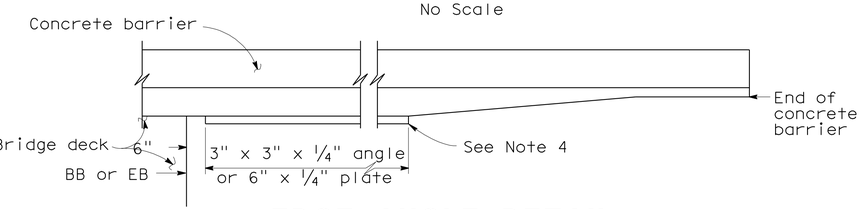

EDGE ANGLE DETAIL
½"=1'-0"

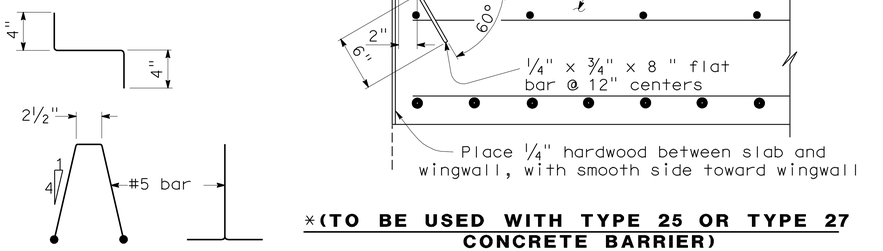

*(TO BE USED WITH TYPE 25 OR TYPE 27 CONCRETE BARRIER)

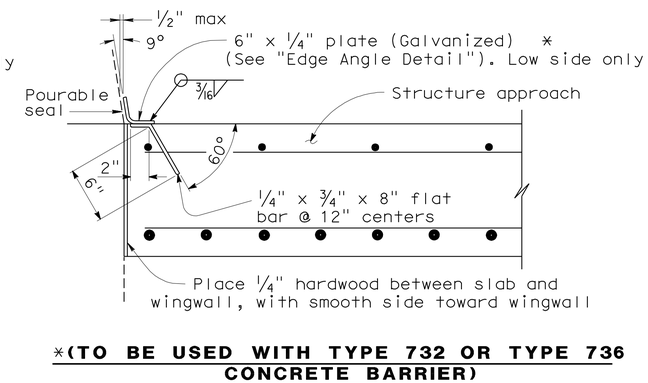

*(TO BE USED WITH TYPE 732 OR TYPE 736 CONCRETE BARRIER)

BAR CHAIR DETAIL
1½"=1'-0"

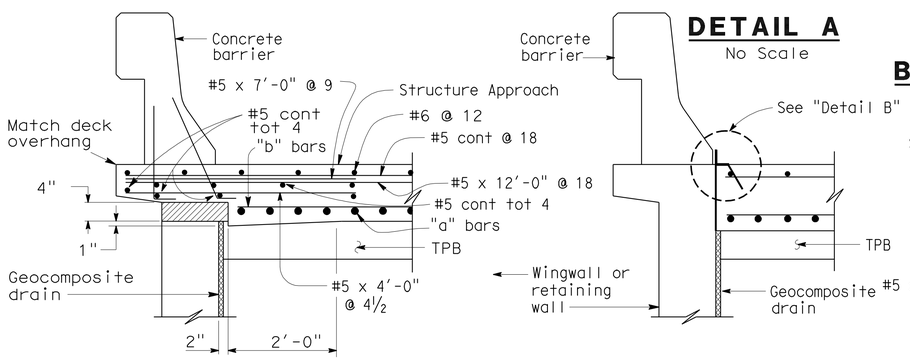

TYPE E-1 TYPE E-2

SECTION C-C
¾"=1'-0"

(Type E-1 to be used,unless otherwise shown on plans)

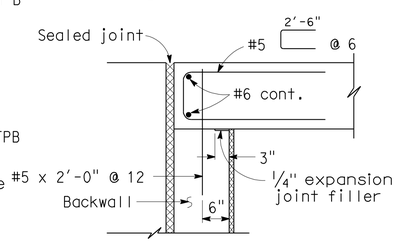

MR ≤ 2"

DETAIL B
1½"=1'-0"

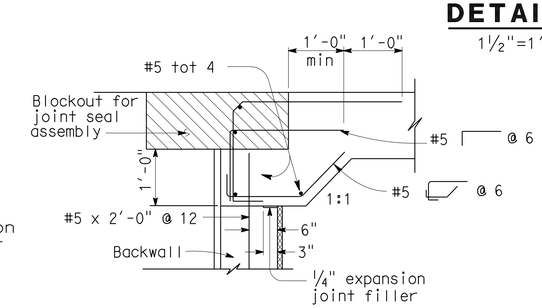

MR > 2"

SEAT TYPE ABUTMENT TIE DETAILS (SEE NOTE 1)
¾"=1'-0"

NOTES:

1. For details not shown,see Structure Plans. For MR ≤ 2",adjust bar reinforcement to clear a sawcut for sealed joint,when required.
2. For drainage details,see "Structure Approach Drainage Details" sheet.
3. Longitudinal construction joints,when permitted by the Engineer, shall be located on lane lines.
4. End angle or plate at beginning of barrier transition, end of wingwall or end of structure approach as applicable.
5. For transverse contact joint with new PCC paving, refer to Standard Plan P10.
6. At the contractor's option, approach slab transverse reinforcement may be placed parallel to paving notch. Spacing of transverse reinforcement is measured along ℄ roadway.

Remove all polystyrene.

STANDARD DRAWING				
RELEASE DATE 3/14/05	DESIGN	BY M.TRAFFALIS	CHECKED E.THORKILDSEN	RELEASED BY
FILE NO. xs3-120e	DETAILS	BY R.YEE	CHECKED E.THORKILDSEN	
	SUBMITTED	BY M.HA	DRAWING DATE 4/98	OFFICE CHIEF

STATE OF CALIFORNIA DEPARTMENT OF TRANSPORTATION

DIVISION OF ENGINEERING SERVICES

BRIDGE NO. 56-0384
MILE POST 16.6

MADISON STREET UC (WIDEN)

STRUCTURE APPROACH TYPE N(30S)

DS OSD 2147A (ENGLISH) (REV. X/XX/XX)

ORIGINAL SCALE IN INCHES FOR REDUCED PLANS 0 1 2 3

CU 08
EA 448401

DISREGARD PRINTS BEARING EARLIER REVISION DATES 6-25-10

REVISION DATES (PRELIMINARY STAGE ONLY)

SHEET 11 OF 17

USERNAME => trlim

560384ssa11.dgn

DATE PLOTTED => 30-APR-2011 TIME PLOTTED => 14:46

DIST.	COUNTY	ROUTE	MILE POST TOTAL PROJECT	SHEET NO.	TOTAL SHEETS
08	Riv	91	15.6/21.6	1745	2028

REGISTERED ENGINEER - CIVIL 11-30-10

4-25-11
PLANS APPROVAL DATE

REGISTERED PROFESSIONAL ENGINEER HUAN VU No. 60696 Exp. 12-31-10 CIVIL STATE OF CALIFORNIA

The State of California or its officers or agents shall not be responsible for the accuracy or completeness of electronic copies of this plan sheet.

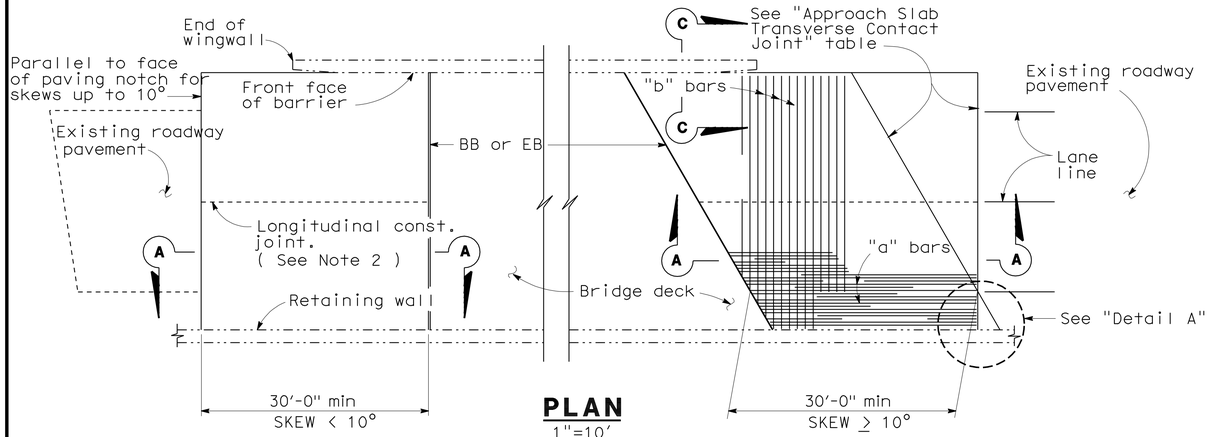

PLAN
1"=10'

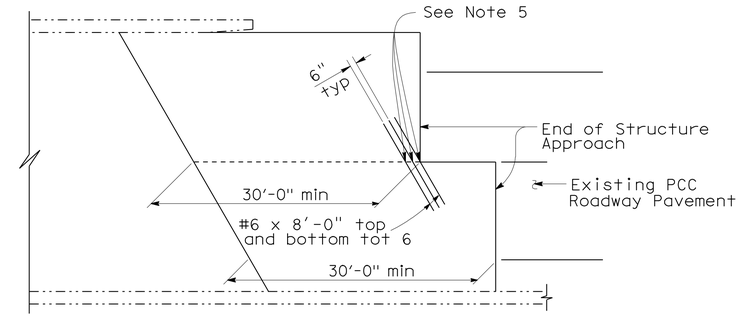

STRUCTURE APPROACH - END STAGGER DETAIL
No Scale

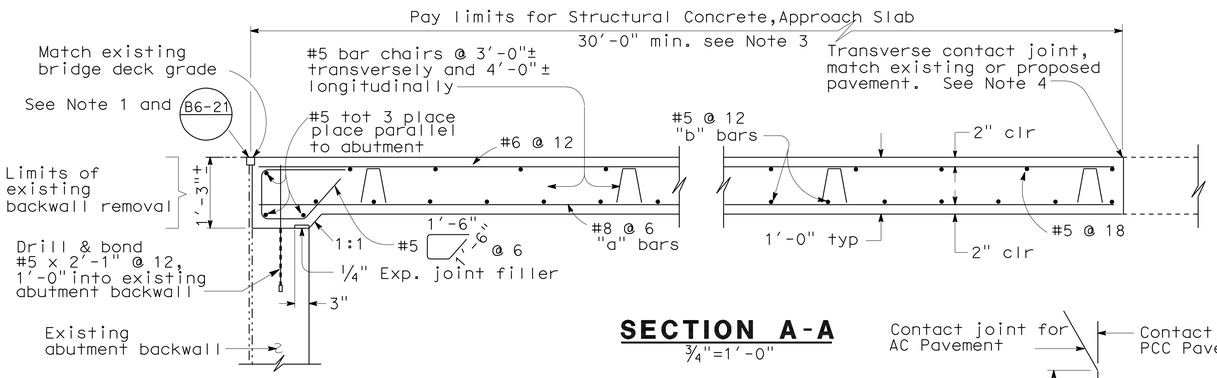

SECTION A-A
3/4"=1'-0"

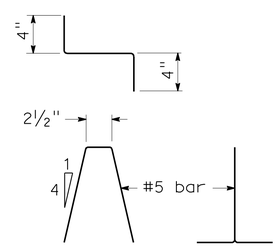

BAR CHAIR DETAIL
1 1/2"=1'-0"

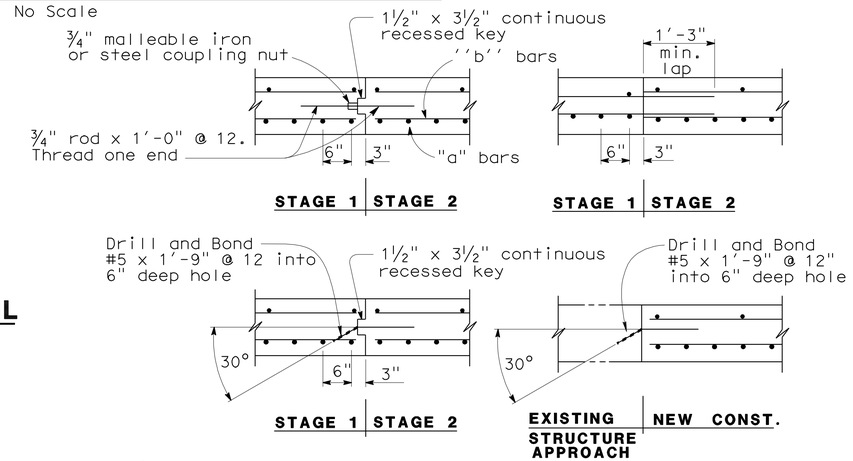

LONGITUDINAL CONSTRUCTION JOINT ALTERNATIVES
3/4"=1'-0"

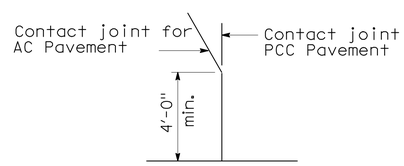

DETAIL A
No Scale

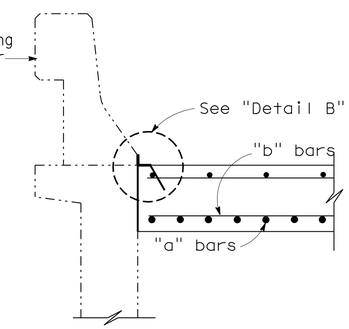

SECTION C-C
3/4"=1'-0"

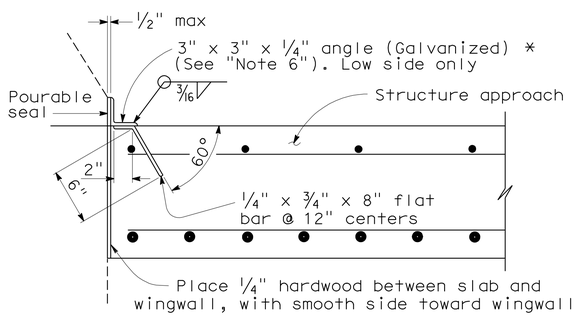

***(TO BE USED WITH TYPE 25 OR TYPE 27 CONCRETE BARRIER)**

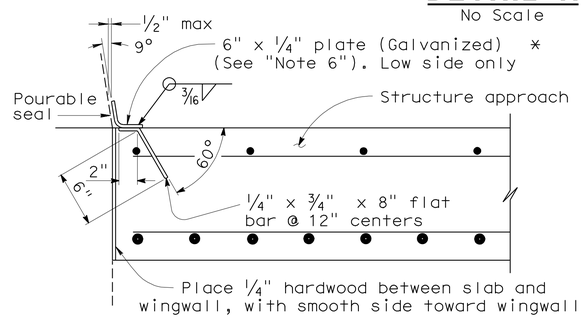

***(TO BE USED WITH TYPE 732 OR TYPE 736 CONCRETE BARRIER)**

DETAIL B
1 1/2"=1'-0"

APPROACH SLAB TRANSVERSE CONTACT JOINT		
APPROACH SKEW	WITH AC ROADWAY PAVEMENT	WITH PCC ROADWAY PAVEMENT
< 10°	Parallel to face of paving notch	Parallel to face of paving notch
10°- 45°	Parallel to face of P N use (Detail A)	Stagger lines 24' to 36' apart
> 45°	Parallel to face of P N use (Detail A)	Stagger at each lane line

NOTES:

1. Sealed joint, for M.R. see Structure Plans. Adjust bar reinforcement to clear a sawcut for sealed joint, when required.
2. Longitudinal construction joints, when permitted by Engineer, shall be located on lane lines.
3. Transverse contact joint shall be a minimum of 5'-0" from an existing or constructed weakened plane joint.
4. For transverse contact joint with new PCC paving, refer to Standard Plan P10.
5. Couplers are required for stage construction.
6. End angle or plate at beginning of barrier transition, end of wingwall or end of structure approach as applicable.

NOTE:

THE CONTRACTOR SHALL VERIFY ALL CONTROLLING FIELD DIMENSIONS BEFORE ORDERING OR FABRICATING ANY MATERIAL.

STANDARD DRAWING

RELEASE DATE 3/14/05	DESIGN	BY M.TRAFFALIS	CHECKED E.THORKILDSEN	RELEASED BY
	DETAILS	BY R.YEE	CHECKED E.THORKILDSEN	
FILE NO. xs3-130e	SUBMITTED	BY M.HA	DRAWING DATE 8/92	OFFICE CHIEF

STATE OF CALIFORNIA DEPARTMENT OF TRANSPORTATION

DIVISION OF ENGINEERING SERVICES

BRIDGE NO. 56-0384
MILE POST 16.6

MADISON STREET UC (WIDEN)

STRUCTURE APPROACH TYPE R(30S)

DS OSD 2147A (ENGLISH) (REV. X/XX/XX)

ORIGINAL SCALE IN INCHES FOR REDUCED PLANS 0 1 2 3

CU 08
EA 448401

DISREGARD PRINTS BEARING EARLIER REVISION DATES 6-25-10

REVISION DATES (PRELIMINARY STAGE ONLY)

SHEET 12 OF 17

USERNAME => trlim

560384ssa12.dgn

DATE PLOTTED => 30-APR-2011 TIME PLOTTED => 14:46

DIST.	COUNTY	ROUTE	MILE POST TOTAL PROJECT	SHEET NO.	TOTAL SHEETS
08	Riv	91	15.6/21.6	1746	2028

REGISTERED ENGINEER - CIVIL 11-30-10

4-25-11
PLANS APPROVAL DATE

REGISTERED PROFESSIONAL ENGINEER HUAN VU No. 60696 Exp. 12-31-10 CIVIL STATE OF CALIFORNIA

The State of California or its officers or agents shall not be responsible for the accuracy or completeness of electronic copies of this plan sheet.

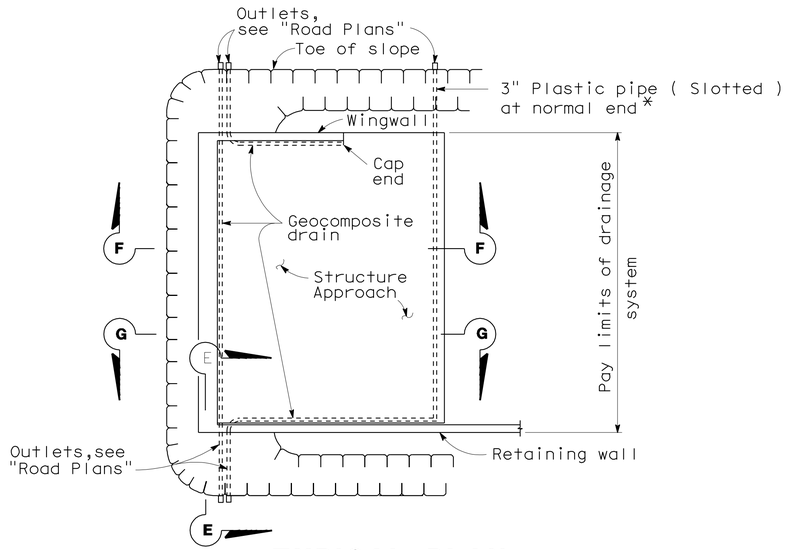

TYPICAL PLAN

1"=10'

*For pipe layout at staggered end, see "Detail B".

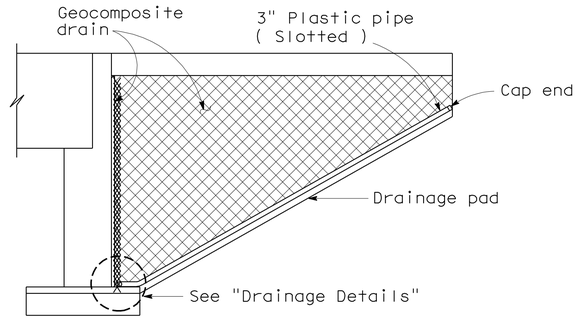

CANTILEVER WINGWALL SECTION F-F

1/4"=1'-0"

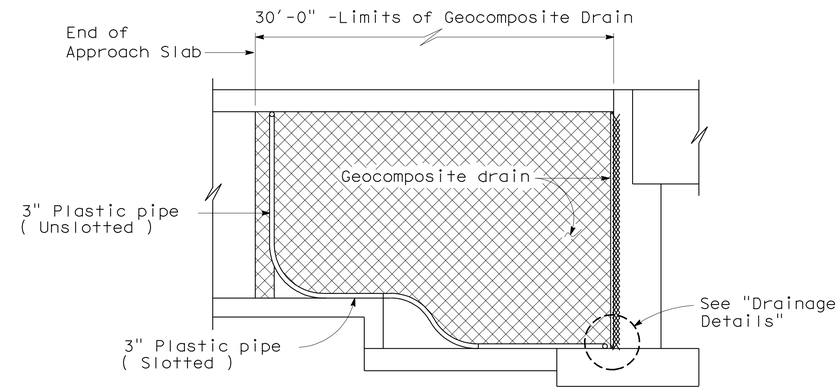

RETAINING WALL WINGWALL SECTION G-G

1/4"=1'-0"

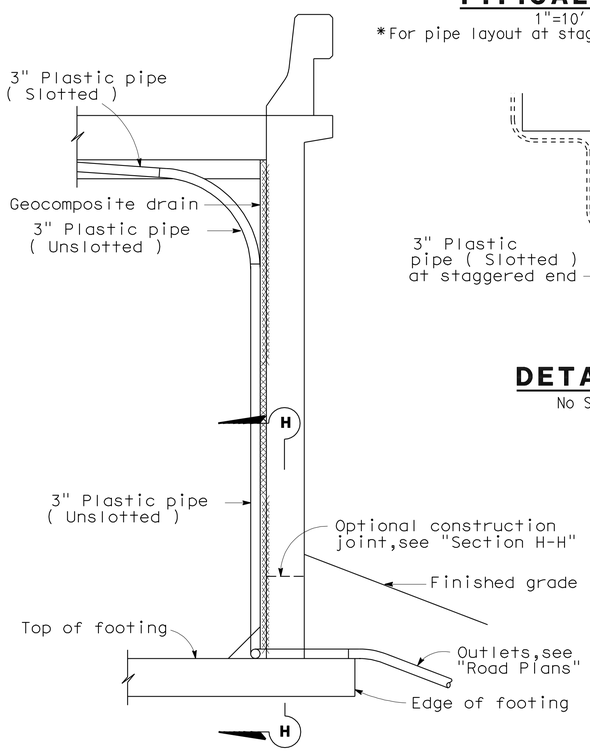

SECTION E-E

1/2"=1'-0"

NOTE: Bends and junctions in 3" plastic pipe are 30" radius min.

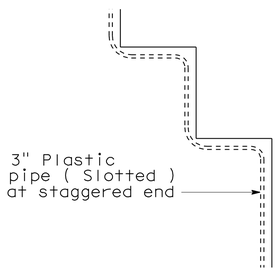

DETAIL B

No Scale

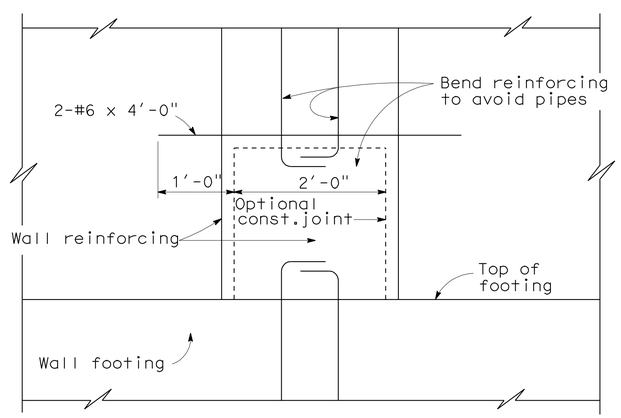

SECTION H-H

1"=1'-0"

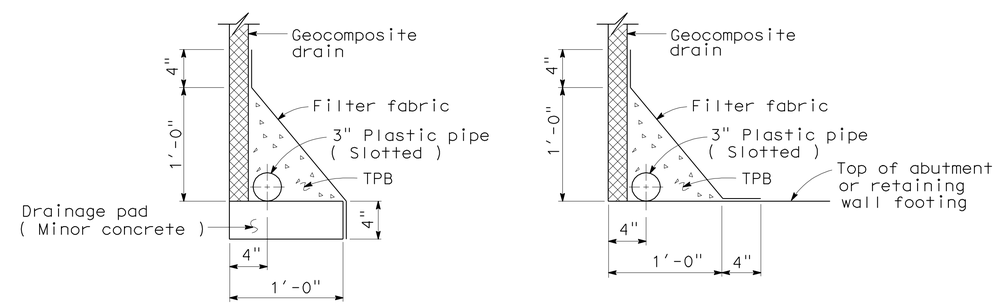

WITHOUT FOOTING WITH FOOTING

DRAINAGE DETAILS

1 1/2"=1'-0"

STANDARD DRAWING					
RELEASE DATE 4/23/98	DESIGN	BY M.TRAFFALIS	CHECKED E.THORKILDSEN	RELEASED BY	
FILE NO. xs3-110e	DETAILS	BY R.YEE	CHECKED E.THORKILDSEN		
	SUBMITTED	BY M.HA	DRAWING DATE 4/98	OFFICE CHIEF	

STATE OF CALIFORNIA DEPARTMENT OF TRANSPORTATION

DIVISION OF ENGINEERING SERVICES

BRIDGE NO. 56-0384
MILE POST 16.6

MADISON STREET UC (WIDEN)

STRUCTURE APPROACH DRAINAGE DETAILS

DS OSD 2147A (ENGLISH) (REV. X/XX/XX)

ORIGINAL SCALE IN INCHES FOR REDUCED PLANS 0 1 2 3

CU 08
EA 448401

DISREGARD PRINTS BEARING EARLIER REVISION DATES 6-25-10

REVISION DATES (PRELIMINARY STAGE ONLY)

SHEET 13 OF 17

USERNAME => trlim

560384ssadd13.dgn

DATE PLOTTED => 30-APR-2011 TIME PLOTTED => 14:46

DIST	COUNTY	ROUTE	POST MILES TOTAL PROJECT	SHEET No	TOTAL SHEETS
08	Riv	91	15.6/21.6	1747	2028

REGISTERED CIVIL ENGINEER 11-30-10 DATE

4-25-11
PLANS APPROVAL DATE

REGISTERED PROFESSIONAL ENGINEER
HUAN VU
No. 60696
Exp. 12-31-10
CIVIL
STATE OF CALIFORNIA

The State of California or its officers or agents shall not be responsible for the accuracy or completeness of electronic copies of this plan sheet.

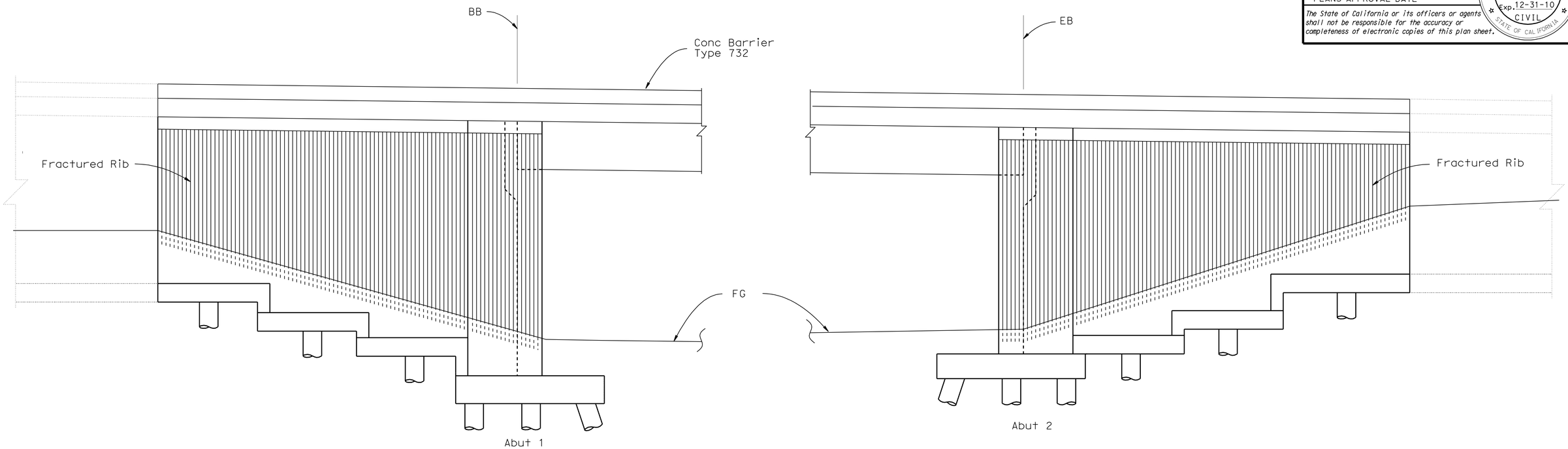

ELEVATION - RIGHT EOD

1/4"=1'-0"

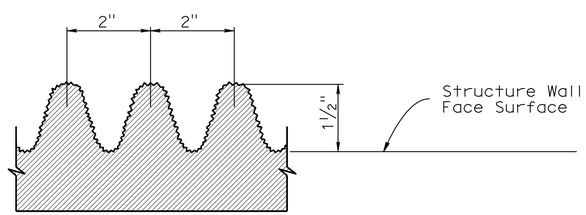

FRACTURED RIB TEXTURE (TYP)

No Scale

DESIGN	BY H. Vu	CHECKED H. Vu	
DETAILS	BY D. Wooten	CHECKED H. Vu	
QUANTITIES	BY D. Azzam	CHECKED R. Anderson	

STATE OF CALIFORNIA
DEPARTMENT OF TRANSPORTATION

DIVISION OF ENGINEERING SERVICES
STRUCTURE DESIGN
DESIGN BRANCH 10

BRIDGE NO. 56-0384
POST MILE 16.6

MADISON STREET UC (WIDEN)
ARCHITECTURAL DETAILS

STRUCTURES DESIGN DETAIL SHEET (ENGLISH) (REV. 10/25/05)

ORIGINAL SCALE IN INCHES FOR REDUCED PLANS 0 1 2 3

CU 08
EA 448401

DISREGARD PRINTS BEARING EARLIER REVISION DATES 9-15-10

REVISION DATES

SHEET 14 OF 17

FILE => 560384umiscdt14.dgn

USERNAME => trilim DATE PLOTTED => 30-APR-2011 TIME PLOTTED => 14:46

DIST	COUNTY	ROUTE	POST MILES TOTAL PROJECT	SHEET No	TOTAL SHEETS
08	Riv	91	15.6/21.6	1748	2028

REGISTERED CIVIL ENGINEER 7-14-10

4-25-11
PLANS APPROVAL DATE

The State of California or its officers or agents shall not be responsible for the accuracy or completeness of electronic copies of this plan sheet.

REGISTERED PROFESSIONAL ENGINEER Yeo Yoon No. 73532 Exp. 12-31-10 CIVIL STATE OF CALIFORNIA

This LOTB sheet was prepared in accordance with the Caltrans Soil & Rock Logging; Classification; & Presentation Manual (June 2007).

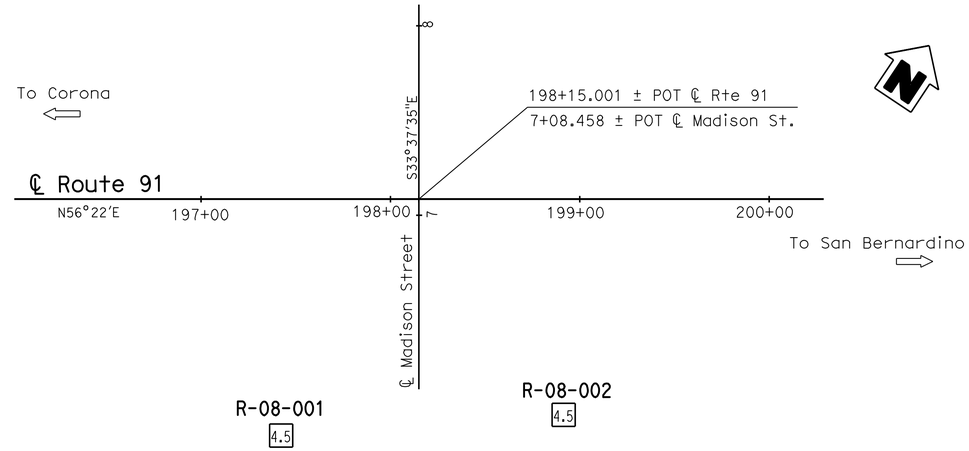

BENCH MARK

PNO 513 Set PK/CT washer
N 2285984.13
E 6211391.50
Elev 849.20' NGVD 29

PLAN

1" = 40'

NOTES:

1. Shown are the actual blow counts recorded in the field. Apparent densities of soils shown on the LOTB sheets are based on the corrected SPT N-values for hammer efficiency.
2. A groundwater table measurement was not made at Boring R-08-001 since the bore hole was backfilled immediately after completion of drilling. The groundwater table measurement was attempted on May 8, 2008 from the monitoring well which was installed at the location of Boring R-08-002, however, no groundwater table was encountered.

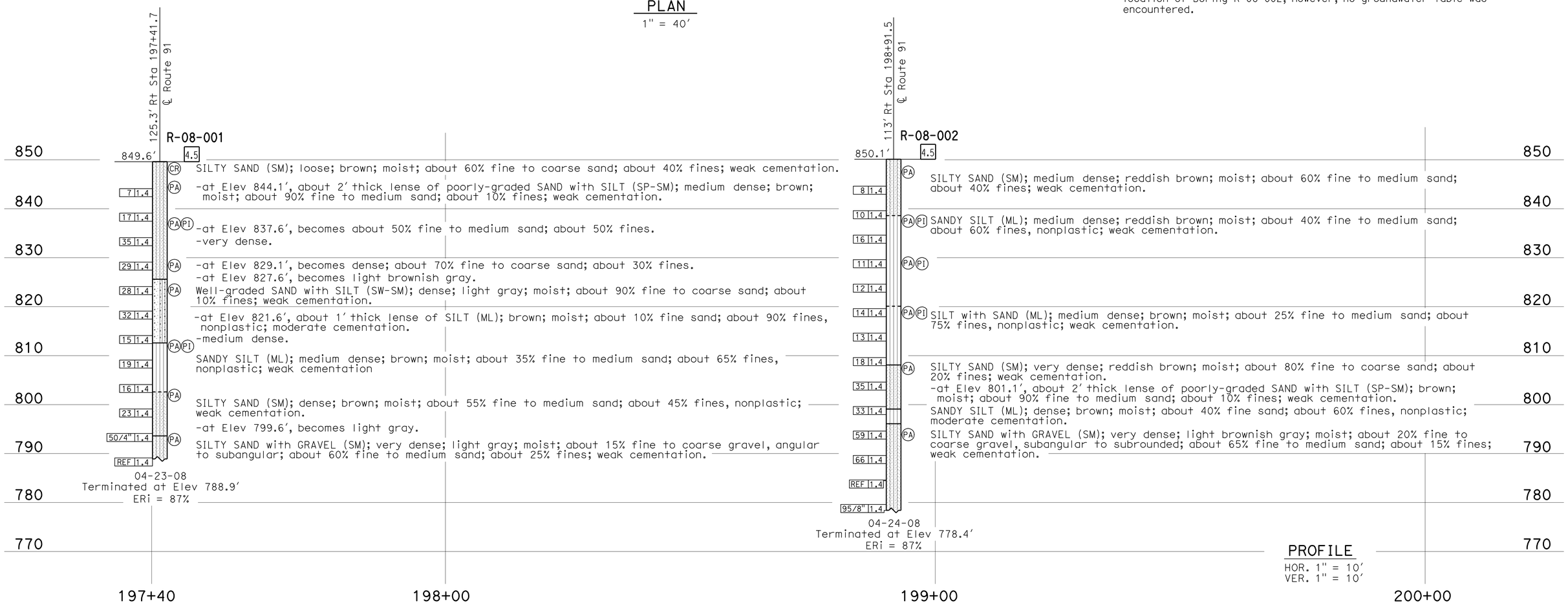

PROFILE

HOR. 1" = 10'
VER. 1" = 10'

ENGINEERING SERVICES	GEOTECHNICAL SERVICES	STATE OF CALIFORNIA DEPARTMENT OF TRANSPORTATION	DIVISION OF ENGINEERING SERVICES STRUCTURE DESIGN DESIGN BRANCH 10	BRIDGE NO. 56-0384 POST MILES 16.7	MADISON STREET UC (WIDEN) LOG OF TEST BORINGS 1 OF 3
FUNCTIONAL SUPERVISOR NAME: M. DeSalvatore	DRAWN BY: I.G-Remmen; 12/08 CHECKED BY: J. Klamecki	FIELD INVESTIGATION BY: Y. Yoon			

OGS CIVIL LOG OF TEST BORINGS SHEET

ORIGINAL SCALE IN INCHES FOR REDUCED PLANS 0 1 2 3

CU 08
EA 448401

DISREGARD PRINTS BEARING EARLIER REVISION DATES

REVISION DATES: 01-26-09 03-16-10 04-05-10 05-13-10 06-23-10

SHEET 15 OF 17

FILE => 560384zltb15.dgn

DATE PLOTTED => 30-APR-2011 TIME PLOTTED => 14:46 USERNAME => trlim

DIST	COUNTY	ROUTE	POST MILES TOTAL PROJECT	SHEET No	TOTAL SHEETS
08	Riv	91	15.6/21.6	1749	2028

REGISTERED CIVIL ENGINEER 7-14-10

4-25-11
PLANS APPROVAL DATE

REGISTERED PROFESSIONAL ENGINEER Yeo Yoon No. 73532 Exp. 12-31-10 CIVIL STATE OF CALIFORNIA

The State of California or its officers or agents shall not be responsible for the accuracy or completeness of electronic copies of this plan sheet.

REFERENCE: CALTRANS SOIL & ROCK LOGGING, CLASSIFICATION, AND PRESENTATION MANUAL (JUNE 2007)

CEMENTATION

Description	Criteria
Weak	Crumbles or breaks with handling or little finger pressure.
Moderate	Crumbles or breaks with considerable finger pressure.
Strong	Will not crumble or break with finger pressure.

CONSISTENCY OF COHESIVE SOILS

Description	Unconfined Compressive Strength (tsf)	Pocket Penetrometer Measurement (tsf)	Torvane Measurement (tsf)	Field Approximation
Very Soft	< 0.25	< 0.25	< 0.12	Easily penetrated several inches by fist
Soft	0.25 to 0.50	0.25 to 0.50	0.12 to 0.25	Easily penetrated several inches by thumb
Medium Stiff	0.50 to 1.0	0.50 to 1.0	0.25 to 0.50	Penetrated several inches by thumb with moderate effort
Stiff	1 to 2	1 to 2	0.50 to 1.0	Readily indented by thumb but penetrated only with great effort
Very Stiff	2 to 4	2 to 4	1.0 to 2.0	Readily indented by thumbnail
Hard	> 4.0	> 4.0	> 2.0	Indented by thumbnail with difficulty

BOREHOLE IDENTIFICATION

Symbol	Hole Type	Description
Size	A	Auger Boring
Size	R P	Rotary drilled boring Rotary percussion boring (air)
Size	R	Rotary drilled diamond core
Size	HD HA	Hand driven (1-inch soil tube) Hand Auger
●	D	Dynamic Cone Penetration Boring
▲	CPT	Cone Penetration Test (ASTM D 5778-95)
⬚	O	Other

Note: Size in inches.

PLASTICITY OF FINE-GRAINED SOILS

Description	Criteria
Nonplastic	A 1/8-inch thread cannot be rolled at any water content.
Low	The thread can barely be rolled and the lump cannot be formed when drier than the plastic limit.
Medium	The thread is easy to roll and not much time is required to reach the plastic limit. The thread cannot be rerolled after reaching the plastic limit. The lump crumbles when drier than the plastic limit.
High	It takes considerable time rolling and kneading to reach the plastic limit. The thread can be rerolled several times after reaching the plastic limit. The lump can be formed without crumbling when drier than the plastic limit.

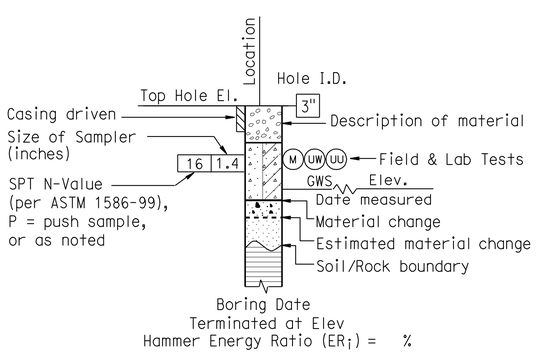

ROTARY BORING

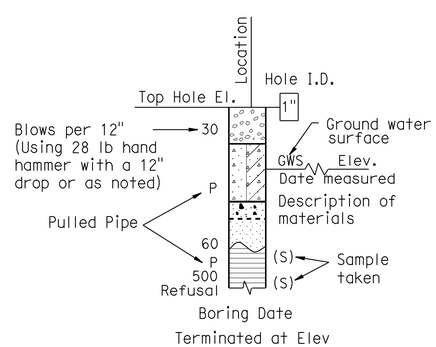

HAND BORING

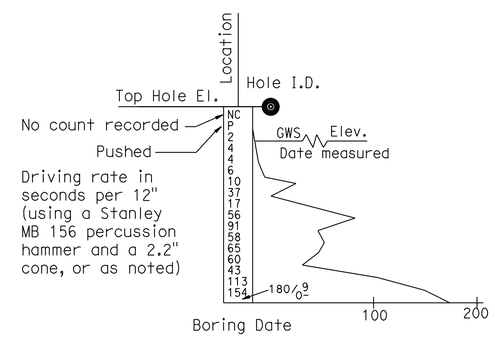

DYNAMIC CONE PENETRATION BORING

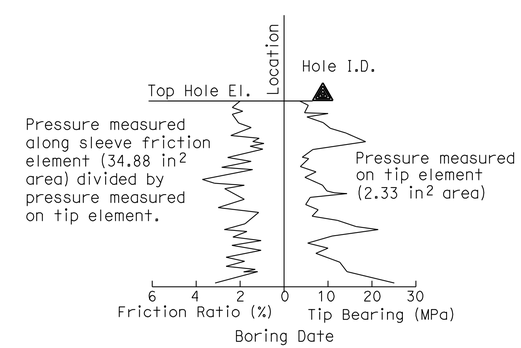

CONE PENETRATION TEST (CPT) SOUNDING

ENGINEERING SERVICES	GEOTECHNICAL SERVICES	STATE OF CALIFORNIA DEPARTMENT OF TRANSPORTATION	DIVISION OF ENGINEERING SERVICES STRUCTURE DESIGN DESIGN BRANCH 10	BRIDGE NO. 56-0384 POST MILE 16.7	MADISON STREET UC (WIDEN) LOG OF TEST BORINGS 2 OF 3
	PREPARED BY: F. Nguyen 03/10		CU 08 EA 448401	DISREGARD PRINTS BEARING EARLIER REVISION DATES	SHEET 16 OF 17

GS LOTB SOIL LEGEND

ORIGINAL SCALE IN INCHES FOR REDUCED PLANS 0 1 2 3

FILE => 560384zltb16.dgn

USERNAME => tttim DATE PLOTTED => 30-APR-2011 TIME PLOTTED => 14:47

REFERENCE: CALTRANS SOIL & ROCK LOGGING, CLASSIFICATION, AND PRESENTATION MANUAL (JUNE 2007)

DIST	COUNTY	ROUTE	POST MILES TOTAL PROJECT	SHEET No	TOTAL SHEETS
08	Riv	91	15.6/21.6	1750	2028

REGISTERED CIVIL ENGINEER 7-14-10

4-25-11
PLANS APPROVAL DATE

REGISTERED PROFESSIONAL ENGINEER Yeo Yoon No. 73532 Exp. 12-31-10 CIVIL STATE OF CALIFORNIA

The State of California or its officers or agents shall not be responsible for the accuracy or completeness of electronic copies of this plan sheet.

GROUP SYMBOLS AND NAMES

Graphic/Symbol	Group Names	Graphic/Symbol	Group Names
GW	Well-graded GRAVEL Well-graded GRAVEL with SAND	CL	Lean CLAY Lean CLAY with SAND Lean CLAY with GRAVEL SANDY lean CLAY SANDY lean CLAY with GRAVEL GRAVELLY lean CLAY GRAVELLY lean CLAY with SAND
GP	Poorly graded GRAVEL Poorly graded GRAVEL with SAND		
GW-GM	Well-graded GRAVEL with SILT Well-graded GRAVEL with SILT and SAND	CL-ML	SILTY CLAY SILTY CLAY with SAND SILTY CLAY with GRAVEL SANDY SILTY CLAY SANDY SILTY CLAY with GRAVEL GRAVELLY SILTY CLAY GRAVELLY SILTY CLAY with SAND
GW-GC	Well-graded GRAVEL with CLAY (or SILTY CLAY) Well-graded GRAVEL with CLAY and SAND (or SILTY CLAY and SAND)		
GP-GM	Poorly graded GRAVEL with SILT Poorly graded GRAVEL with SILT and SAND	ML	SILT SILT with SAND SILT with GRAVEL SANDY SILT SANDY SILT with GRAVEL GRAVELLY SILT GRAVELLY SILT with SAND
GP-GC	Poorly graded GRAVEL with CLAY (or SILTY CLAY) Poorly graded GRAVEL with CLAY and SAND (or SILTY CLAY and SAND)		
GM	SILTY GRAVEL SILTY GRAVEL with SAND	OL	ORGANIC lean CLAY ORGANIC lean CLAY with SAND ORGANIC lean CLAY with GRAVEL SANDY ORGANIC lean CLAY SANDY ORGANIC lean CLAY with GRAVEL GRAVELLY ORGANIC lean CLAY GRAVELLY ORGANIC lean CLAY with SAND
GC	CLAYEY GRAVEL CLAYEY GRAVEL with SAND		
GC-GM	SILTY, CLAYEY GRAVEL SILTY, CLAYEY GRAVEL with SAND	OL	ORGANIC SILT ORGANIC SILT with SAND ORGANIC SILT with GRAVEL SANDY ORGANIC SILT SANDY ORGANIC SILT with GRAVEL GRAVELLY ORGANIC SILT GRAVELLY ORGANIC SILT with SAND
SW	Well-graded SAND Well-graded SAND with GRAVEL		
SP	Poorly graded SAND Poorly graded SAND with GRAVEL	CH	Fat CLAY Fat CLAY with SAND Fat CLAY with GRAVEL SANDY fat CLAY SANDY fat CLAY with GRAVEL GRAVELLY fat CLAY GRAVELLY fat CLAY with SAND
SW-SM	Well-graded SAND with SILT Well-graded SAND with SILT and GRAVEL		
SW-SC	Well-graded SAND with CLAY (or SILTY CLAY) Well-graded SAND with CLAY and GRAVEL (or SILTY CLAY and GRAVEL)	MH	Elastic SILT Elastic SILT with SAND Elastic SILT with GRAVEL SANDY elastic SILT SANDY elastic SILT with GRAVEL GRAVELLY elastic SILT GRAVELLY elastic SILT with SAND
SP-SM	Poorly graded SAND with SILT Poorly graded SAND with SILT and GRAVEL		
SP-SC	Poorly graded SAND with CLAY (or SILTY CLAY) Poorly graded SAND with CLAY and GRAVEL (or SILTY CLAY and GRAVEL)	OH	ORGANIC fat CLAY ORGANIC fat CLAY with SAND ORGANIC fat CLAY with GRAVEL SANDY ORGANIC fat CLAY SANDY ORGANIC fat CLAY with GRAVEL GRAVELLY ORGANIC fat CLAY GRAVELLY ORGANIC fat CLAY with SAND
SM	SILTY SAND SILTY SAND with GRAVEL		
SC	CLAYEY SAND CLAYEY SAND with GRAVEL	OH	ORGANIC elastic SILT ORGANIC elastic SILT with SAND ORGANIC elastic SILT with GRAVEL SANDY ORGANIC elastic SILT SANDY ORGANIC elastic SILT with GRAVEL GRAVELLY ORGANIC elastic SILT GRAVELLY ORGANIC elastic SILT with SAND
SC-SM	SILTY, CLAYEY SAND SILTY, CLAYEY SAND with GRAVEL		
PT	PEAT	OL/OH	ORGANIC SOIL ORGANIC SOIL with SAND ORGANIC SOIL with GRAVEL SANDY ORGANIC SOIL SANDY ORGANIC SOIL with GRAVEL GRAVELLY ORGANIC SOIL GRAVELLY ORGANIC SOIL with SAND
	COBBLES COBBLES and BOULDERS BOULDERS		

FIELD AND LABORATORY TESTING

- (C) Consolidation (ASTM D 2435)
- (CL) Collapse Potential (ASTM D 5333)
- (CP) Compaction Curve (CTM 216)
- (CR) Corrosivity Testing (CTM 643, CTM 422, CTM 417)
- (CU) Consolidated Undrained Triaxial (ASTM D 4767)
- (DS) Direct Shear (ASTM D 3080)
- (EI) Expansion Index (ASTM D 4829)
- (M) Moisture Content (ASTM D 2216)
- (OC) Organic Content-% (ASTM D 2974)
- (P) Permeability (CTM 220)
- (PA) Particle Size Analysis (ASTM D 422)
- (PI) Plasticity Index (AASHTO T 90) Liquid Limit (AASHTO T 89)
- (PL) Point Load Index (ASTM D 5731)
- (PM) Pressure Meter
- (PP) Pocket Penetrometer
- (R) R-Value (CTM 301)
- (SE) Sand Equivalent (CTM 217)
- (SG) Specific Gravity (AASHTO T 100)
- (SL) Shrinkage Limit (ASTM D 427)
- (SW) Swell Potential (ASTM D 4546)
- (TV) Pocket Torvane
- (UC) Unconfined Compression-Soil (ASTM D 2166) Unconfined Compression-Rock (ASTM D 2938)
- (UU) Unconsolidated Undrained Triaxial (ASTM D 2850)
- (UW) Unit Weight (ASTM D 4767)
- (VS) Vane Shear (AASHTO T 223)

APPARENT DENSITY OF COHESIONLESS SOILS

Description	SPT N_{60} (Blows / 12 inches)
Very loose	0 - 4
Loose	5 - 10
Medium Dense	11 - 30
Dense	31 - 50
Very Dense	> 50

MOISTURE

Description	Criteria
Dry	Absence of moisture, dusty, dry to the touch
Moist	Damp but no visible water
Wet	Visible free water, usually soil is below water table

PERCENT OR PROPORTION OF SOILS

Description	Criteria
Trace	Particles are present but estimated to be less than 5%
Few	5 to 10%
Little	15 to 25%
Some	30 to 45%
Mostly	50 to 100%

PARTICLE SIZE

Description		Size
Boulder		> 12"
Cobble		3" to 12"
Gravel	Coarse	3/4" to 3"
	Fine	No. 4 to 3/4"
Sand	Coarse	No. 10 to No. 4
	Medium	No. 40 to No. 10
	Fine	No. 200 to No. 40

ENGINEERING SERVICES

GEOTECHNICAL SERVICES
PREPARED BY: F. Nguyen 03/10

STATE OF CALIFORNIA DEPARTMENT OF TRANSPORTATION

DIVISION OF ENGINEERING SERVICES STRUCTURE DESIGN
DESIGN BRANCH 10

BRIDGE NO. 56-0384
POST MILE 16.7

MADISON STREET UC (WIDEN)
LOG OF TEST BORINGS 3 OF 3

GS LOTB SOIL LEGEND

ORIGINAL SCALE IN INCHES FOR REDUCED PLANS 0 1 2 3

CU 08
EA 448401

DISREGARD PRINTS BEARING EARLIER REVISION DATES 9-21-10

REVISION DATES

SHEET 17 OF 17

FILE => 560384zltb17.dgn

USERNAME => tr11m DATE PLOTTED => 30-APR-2011 TIME PLOTTED => 14:47

DIST	COUNTY	ROUTE	POST MILES TOTAL PROJECT	SHEET No	TOTAL SHEETS
08	Riv	91	15.6/21.6	1751	2028

REGISTERED CIVIL ENGINEER 11-30-10 DATE

4-25-11
PLANS APPROVAL DATE

REGISTERED PROFESSIONAL ENGINEER HUAN VU No. 60696 Exp. 12-31-10 CIVIL STATE OF CALIFORNIA

The State of California or its officers or agents shall not be responsible for the accuracy or completeness of electronic copies of this plan sheet.

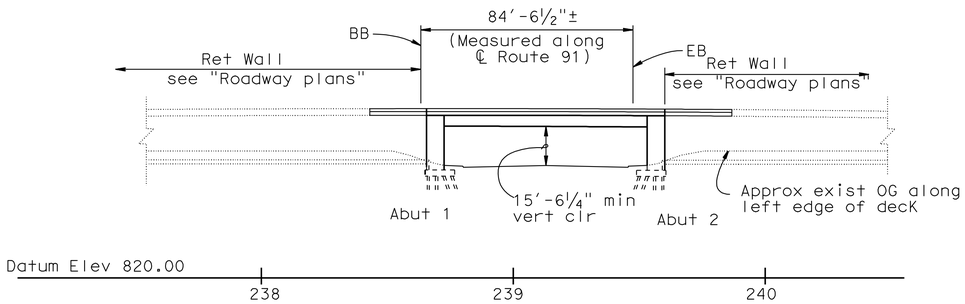

MIRROR ELEVATION

1"=30'

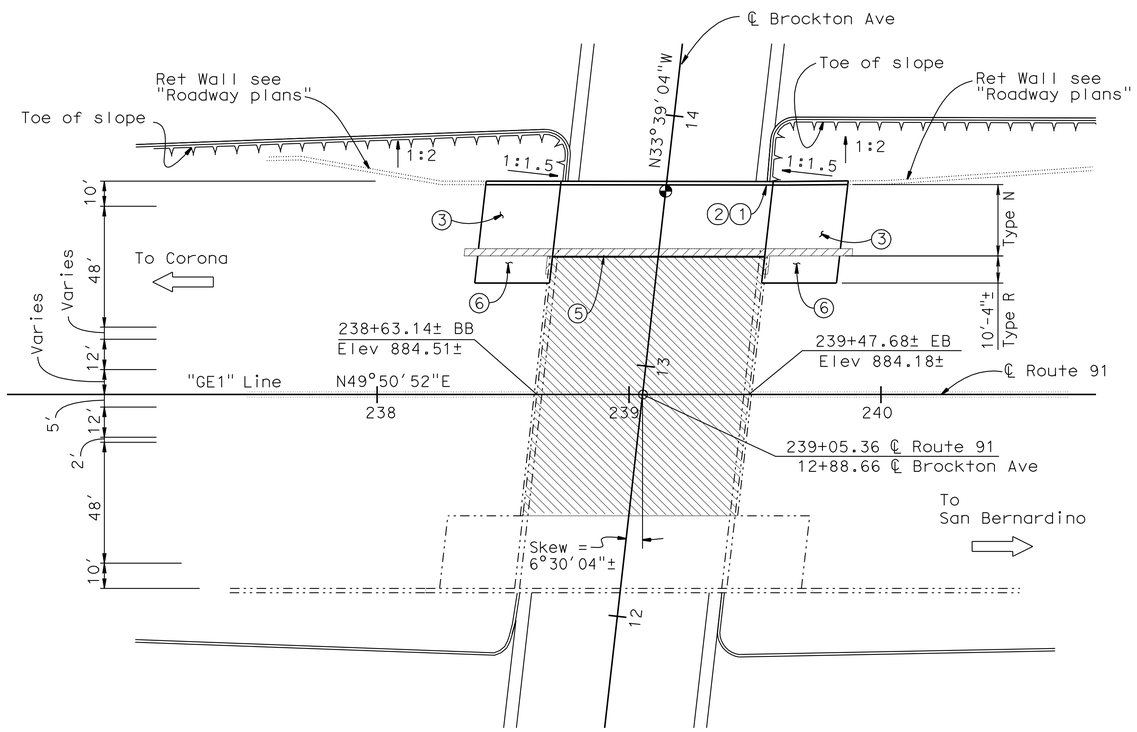

PLAN

1"=30'

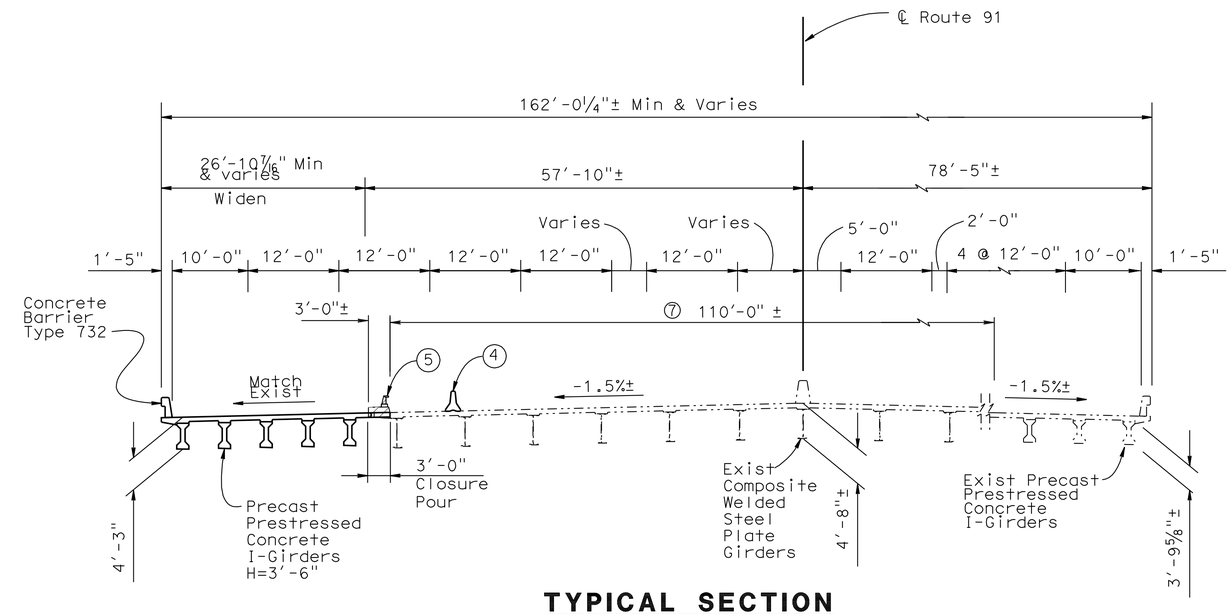

TYPICAL SECTION

1"=10'

NOTES:

1. Paint "BROCKTON AVE UC"
2. Paint "BR NO. 56-0385"
3. Structure Approach Type N (30S)
4. Temporary Railing (Type K), See "Roadway Plans"
5. Remove exist overhang, curb (Type F) & railing (Type 9)
6. Structure Approach Type R (30S)
7. Clean and treat bridge deck. Prior to bridge deck treatment, remove unsound concrete and patch with rapid setting concrete.

LEGEND:

- Indicates existing structure
- Indicates new construction
- Indicates direction of traffic flow
- Indicates point of minimum Vert Clr at left widening
- Indicates limits of removal
- Indicates Limits of Clean and Treat Bridge Deck

NOTE:
THE CONTRACTOR SHALL VERIFY ALL CONTROLLING FIELD DIMENSIONS BEFORE ORDERING OR FABRICATING ANY MATERIAL.

For "Index to Plans", "General Notes", "Standard Plans", "Pile Data" and "Quantities", see "INDEX TO PLANS" sheet.

DANIEL T. ADAMS
DESIGN ENGINEER

	BY	CHECKED
DESIGN	H. Tuazone	J. Szabo
DETAILS	Y. Tang	J. Szabo
QUANTITIES	M. Crete	A. McPhee

LOAD & RESISTANCE FACTOR DESIGN — LIVE LOADING: HL93 W/"LOW-BOY"; PERMIT DESIGN VEHICLE

	BY	CHECKED
LAYOUT	H. Vu	J. Szabo
SPECIFICATIONS	D. Klein	D. Klein (PLANS AND SPECS COMPARED)

STATE OF CALIFORNIA
DEPARTMENT OF TRANSPORTATION

ORIGINAL SCALE IN INCHES FOR REDUCED PLANS 0 1 2 3

DIVISION OF ENGINEERING SERVICES
STRUCTURE DESIGN
DESIGN BRANCH 10

CU 08
EA 448401

BRIDGE NO. 56-0385
POST MILE 17.43

BROCKTON AVENUE UC (WIDEN)
GENERAL PLAN

DISREGARD PRINTS BEARING EARLIER REVISION DATES

REVISION DATES: 4-15-08, 6-16-08, 8-26-08, 10-02-08, 5-29-09, 6-25-09, 7-01-10, 10-05-10

SHEET 1 OF 18

STRUCTURES DESIGN GENERAL PLAN SHEET (ENGLISH) (REV.07-24-06)

FILE => 560385agp01.dgn

USERNAME => trlim DATE PLOTTED => 30-APR-2011 TIME PLOTTED => 14:47

DIST	COUNTY	ROUTE	POST MILES TOTAL PROJECT	SHEET No	TOTAL SHEETS
08	Riv	91	15.6/21.6	1752	2028

REGISTERED CIVIL ENGINEER 11-30-10 DATE

4-25-11
PLANS APPROVAL DATE

REGISTERED PROFESSIONAL ENGINEER HUAN VU No. 60696 Exp. 12-31-10 CIVIL STATE OF CALIFORNIA

The State of California or its officers or agents shall not be responsible for the accuracy or completeness of electronic copies of this plan sheet.

INDEX TO PLANS

Sheet No.	Title
1	GENERAL PLAN
2	INDEX TO PLANS
3	FOUNDATION PLAN
4	ABUTMENT LAYOUT
5	ABUTMENT DETAILS No. 1
6	ABUTMENT DETAILS No. 2
7	TYPICAL SECTION
8	GIRDER LAYOUT
9	PRECAST PRESTRESSED I GIRDER
10	MISCELLANEOUS DETAILS
11	STRUCTURE APPROACH TYPE R(30S)
12	STRUCTURE APPROACH TYPE N(30S)
13	STRUCTURE APPROACH DRAINAGE DETAILS
14	LOG OF TEST BORINGS (1 OF 5)
15	LOG OF TEST BORINGS (2 OF 5)
16	LOG OF TEST BORINGS (3 OF 5)
17	LOG OF TEST BORINGS (4 OF 5)
18	LOG OF TEST BORINGS (5 OF 5)

QUANTITIES

REMOVE UNSOUND CONCRETE	3	CF
CLEAN BRIDGE DECK	11,016	SQFT
BRIDGE REMOVAL (PORTION), LOCATION C	LUMP	SUM
STRUCTURE EXCAVATION (BRIDGE)	145	CY
STRUCTURE BACKFILL (BRIDGE)	278	CY
AGGREGATE BASE (APPROACH SLAB)	1	CY
FURNISH PILING (CLASS 140) (ALTERNATIVE V)	913	LF
DRIVE PILE (CLASS 140) (ALTERNATIVE V)	22	EA
STRUCTURAL CONCRETE, BRIDGE FOOTING	50	CY
STRUCTURAL CONCRETE, BRIDGE	191	CY
STRUCTURAL CONCRETE, APPROACH SLAB (TYPE N)	60	CY
STRUCTURAL CONCRETE, APPROACH SLAB (TYPE R)	7	CY
ARCHITECTURAL SURFACE(TEXTURED CONCRETE) FRACTURED RIB TEXTURE	128	SQFT
DRILL AND BOND DOWEL	56	LF
RAPID SETTING CONCRETE (PATCH)	3	CF
FURNISH PRECAST PRESTRESSED CONCRETE GIRDER (80'-90')	5	EA
ERECT PRECAST PRESTRESSED CONCRETE GIRDER	5	EA
JOINT SEAL (MR 1")	55	LF
BAR REINFORCING STEEL (BRIDGE)	41,810	LB
TREAT BRIDGE DECK	11,016	SQFT
PUBLIC SAFETY PLAN	LUMP	SUM
FURNISH BRIDGE DECK TREATMENT MATERIAL	123	GAL
CONCRETE BARRIER (TYPE 732)	84	LF

NOTE:
THE CONTRACTOR SHALL VERIFY ALL CONTROLLING FIELD DIMENSIONS BEFORE ORDERING OR FABRICATING ANY MATERIAL.

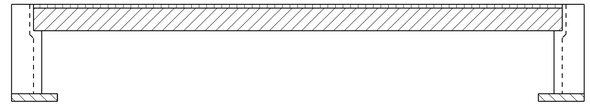

Structural Concrete, Bridge

Structural Concrete, Bridge (4 ksi @ 28 days)

Structural Concrete, Bridge Footing

Indicates PC/PS I-Girders

CONCRETE STRENGTH AND TYPE LIMITS

NO SCALE

STANDARD PLANS DATED MAY 2006

	A10A	ACRONYMS AND ABBREVIATIONS (SHEET 1 OF 2)
	A10B	ACRONYMS AND ABBREVIATIONS (SHEET 2 OF 2)
	A10C	SYMBOLS (SHEET 1 OF 2)
	A10D	SYMBOLS (SHEET 2 OF 2)
	A62B	LIMITS OF PAYMENT FOR EXCAVATION AND BACKFILL - BRIDGE SURCHARGE AND WALL
	A62C	LIMITS OF PAYMENT FOR EXCAVATION AND BACKFILL - BRIDGE
	T-3	TEMPORARY RAILING (TYPE K)
	BO-1	BRIDGE DETAILS
	BO-3	BRIDGE DETAILS
	BO-5	BRIDGE DETAILS
	BO-13	BRIDGE DETAILS
	B2-5	PILE DETAILS CLASS 90 AND CLASS 140
	B3-8	RETAINING WALL DETAILS No. 1
RSP	B6-21	JOINT SEALS (MAXIMUM MOVEMENT RATING = 2")
	B11-55	CONCRETE BARRIER TYPE 732
RSP	ES-9A	ELECTRICAL SYSTEMS (ELECTRICAL DETAILS STRUCTURE INSTALLATIONS)
	ES-9B	ELECTRICAL SYSTEMS (ELECTRICAL DETAILS STRUCTURE INSTALLATIONS)

STANDARD PLAN SHEET NO.

DETAIL NO.

PILE DATA TABLE

Location	Pile Type	Nominal Resistance (kips)		Design Tip Elevation (ft)	Specified Tip Elevation (ft)	Nominal Driving Resistance Required (kips)
		Compression	Tension			
Abut 1	Class 140 Alt. V	230	0	819.0 (a)	819.0	230
Abut 2	Class 140 Alt. V	230	0	813.0 (a)	813.0	230

Notes:

1. Design Tip Elev is controlled by (a) Compression

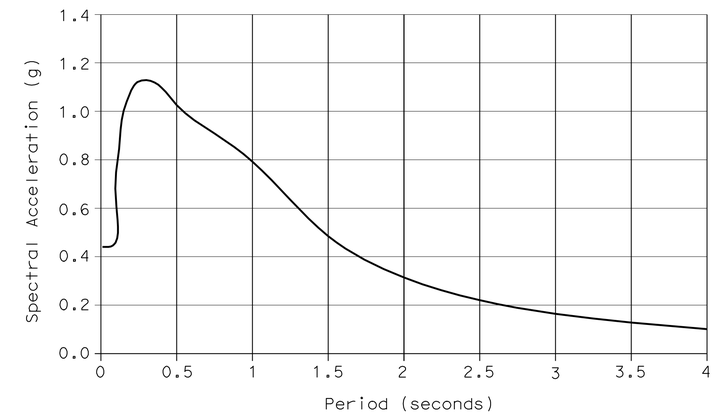

Controlling Fault: San Jacinto
Style: Strike-Slip
PBA (g): 16.16
Soil Type: D

ARS CURVE

LOAD AND RESISTANCE FACTOR DESIGN

DESIGN: AASHTO LRFD BRIDGE DESIGN SPECIFICATIONS, 3rd Edition with interims through 2006 and the Caltrans Amendments v3.06.01 except for geotechnical design of deep foundations, earth retaining systems, bridge details taken from the Standard Plans May 2006 and earlier versions, Standard Bridge Details (XS sheets, etc) are designed using Bridge Design specifications (1966 AASHTO) with revisions by Caltrans).

SEISMIC DESIGN: Caltrans Seismic Design Criteria (SDC) Version 1.4, July, 2006.

DEAD LOAD: Includes 35 Psf for future wearing surface.

LIVE LOADING: HL93 with "Low Boy" and permit design load.

SEISMIC LOADING: SDC ARS Curve for Soil Profile Type D (M=7.5 ± 0.25) Peak Rock Acceleration = 0.4g)

REINFORCED CONCRETE: f_y = 60 ksi
f'_c = 3.6 ksi, unless otherwise noted
n = 8

See prestressing notes on "PRECAST PRESTRESSED I GIRDER" sheet.

	BY	CHECKED
DESIGN	H. Tuazon	J. Szabo
DETAILS	R. Kirkland	J. Szabo
QUANTITIES	M. Crete	A. McPhee

STATE OF CALIFORNIA
DEPARTMENT OF TRANSPORTATION

DIVISION OF ENGINEERING SERVICES
STRUCTURE DESIGN
DESIGN BRANCH 10

BRIDGE NO. 56-0385
POST MILE 17.43

BROCKTON AVENUE UC (WIDEN)

INDEX TO PLANS

STRUCTURES DESIGN DETAIL SHEET (ENGLISH) (REV. 10/25/05)

ORIGINAL SCALE IN INCHES FOR REDUCED PLANS 0 1 2 3

CU 08
EA 448401

DISREGARD PRINTS BEARING EARLIER REVISION DATES

REVISION DATES: 7-01-10

SHEET 2 OF 18

FILE => 560385aitp02.dgn

USERNAME => trfim DATE PLOTTED => 30-APR-2011 TIME PLOTTED => 14:47

DIST	COUNTY	ROUTE	POST MILES TOTAL PROJECT	SHEET No	TOTAL SHEETS
08	Riv	91	15.6/21.6	1753	2028

REGISTERED CIVIL ENGINEER 11-30-10 DATE

4-25-11
PLANS APPROVAL DATE

REGISTERED PROFESSIONAL ENGINEER HUAN VU No. 60696 Exp. 12-31-10 CIVIL STATE OF CALIFORNIA

The State of California or its officers or agents shall not be responsible for the accuracy or completeness of electronic copies of this plan sheet.

Bridge Location
Ⓐ - 54.767 Lt. ℄, Sta.238+69.407, Elev.=883.613 ±
Ⓑ - 54.839 Lt. ℄, Sta.239+53.929, Elev.=883.298 ±

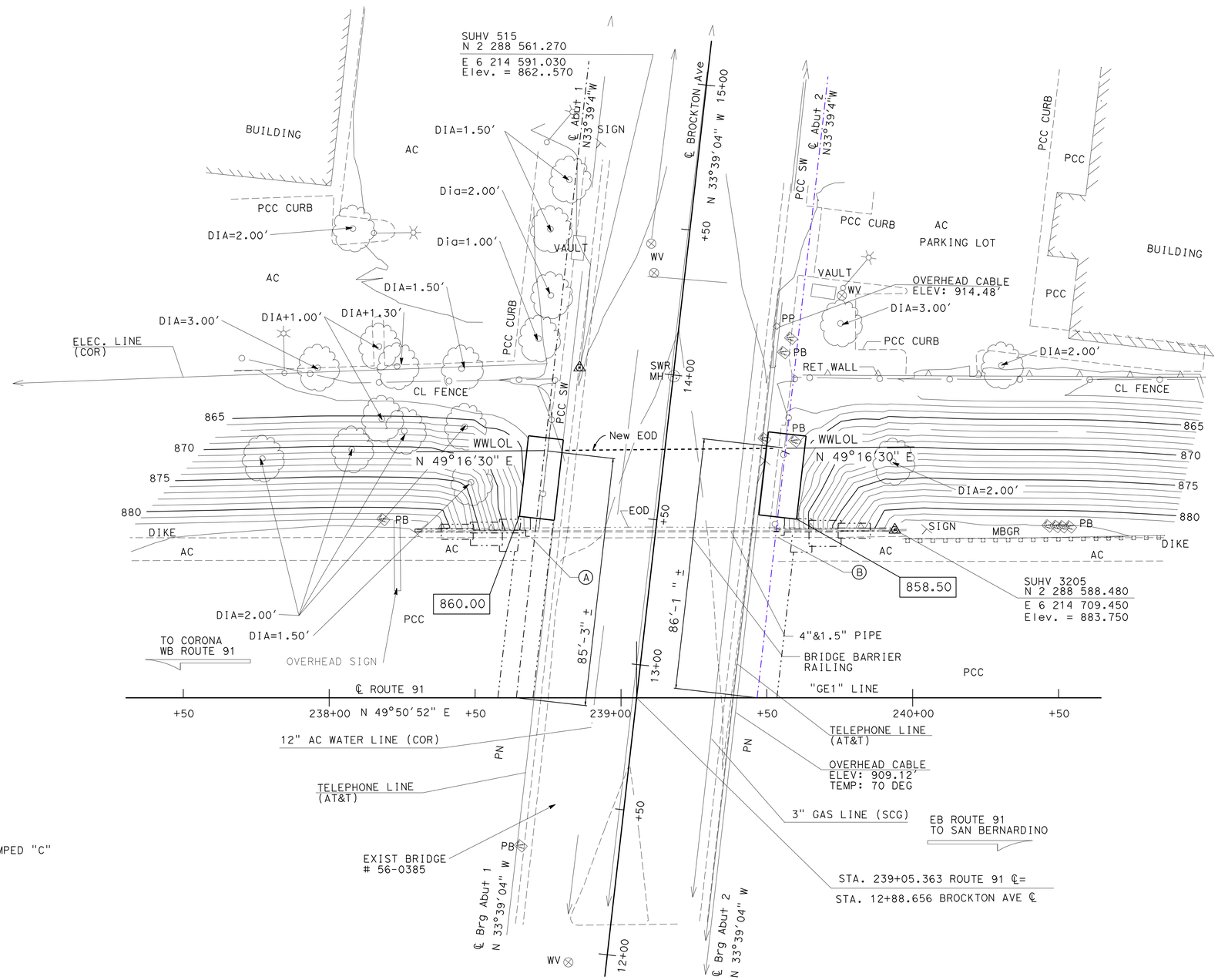

Legend:

Denotes existing construction

Denotes new construction

Denotes bottom of footing elevation

SURVEY CONTROL

SUHV 3205
Fnd 2" BRASS DISK STAMPED "C"
57.564' Lt. ℄ Rte 91
Sta. 239+93.854
N 2 288 588.480
E6 214 709.450
Elev. = 883.750

SUHV 516 (NOT SHOWN)
Fnd PK/CT WSHR
125.467' Rt. ℄ Rte 91
Sta. 238+58.648
N 2 288 361.400
E 6 214 724.130
Elev. = 864.330

NOTES:
UNDERGROUND UTILITIES AS SHOWN ARE APPROXIMATE

PRELIMINARY INVESTIGATION SECTION

SCALE	VERT.DATUM NGVD 29	PHOTOGRAMMETRY AS OF: X		
1"=20'	HORZ.DATUM NAD 83	SURVEYED BY C. Stewart 06/08	CHECKED BY L. Manabo 06/08	
ALIGNMENT TIES DIST TRAV SHEETS		DRAFTED BY M. Sadaghiani 07/08	CHECKED BY L. Manabo07/08	

DESIGN	BY H. Tuazone	CHECKED J. Szabo	
DETAILS	BY R.Kirkland	CHECKED J. Szabo	
QUANTITIES	BY M. Crete	CHECKED A. McPhee	

STATE OF CALIFORNIA
DEPARTMENT OF TRANSPORTATION

DIVISION OF ENGINEERING SERVICES
STRUCTURE DESIGN
DESIGN BRANCH 10

BRIDGE NO. 56-0385
POST MILE 17.43

BROCKTON AVE UC (WIDEN)
FOUNDATION PLAN

STRUCTURES FOUNDATION PLAN SHEET (ENGLISH) (REV. 10/25/05)

ORIGINAL SCALE IN INCHES FOR REDUCED PLANS 0 1 2 3

CU 08
EA 448401

DISREGARD PRINTS BEARING EARLIER REVISION DATES 07/26/08 07/04/10 10/05/10

REVISION DATES

SHEET 3 OF 18

FILE => 560385efdp103.dgn

USERNAME => trilim DATE PLOTTED => 30-APR-2011 TIME PLOTTED => 14:47

DIST	COUNTY	ROUTE	POST MILES TOTAL PROJECT	SHEET No	TOTAL SHEETS
08	Riv	91	15.6/21.6	1754	2028

REGISTERED CIVIL ENGINEER 11-30-10 DATE

4-25-11
PLANS APPROVAL DATE

REGISTERED PROFESSIONAL ENGINEER HUAN VU No. 60696 Exp. 12-31-10 CIVIL STATE OF CALIFORNIA

The State of California or its officers or agents shall not be responsible for the accuracy or completeness of electronic copies of this plan sheet.

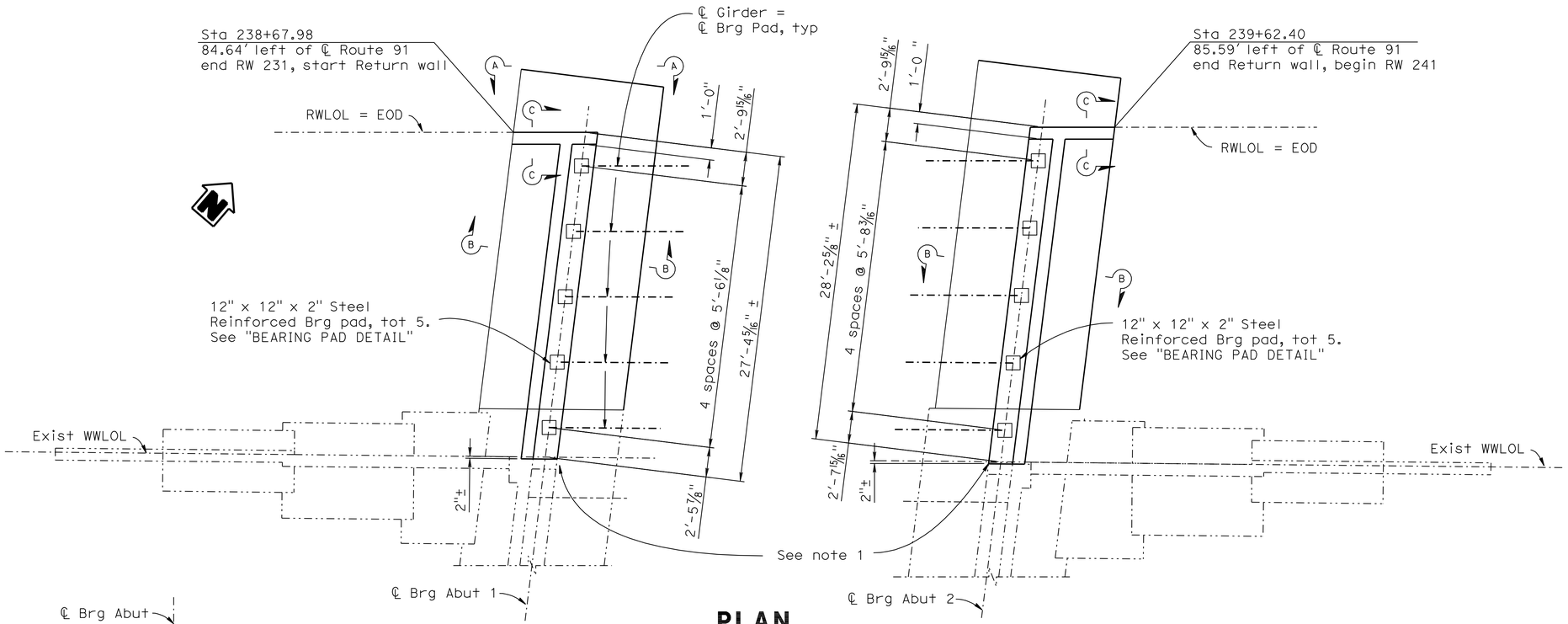

PLAN

3/16" = 1'-0"

NOTES:

1. Existing front face of Abutment and new front face of Abutment should be matched on same line
2. For "SECTION B-B" see "ABUTMENT DETAILS NO. 1" sheet.
3. For "SECTION C-C, D-D, E-E & F- F" and other details not shown see "ABUTMENT DETAILS NO. 2" sheet.
4. For removal of existing structure see "BRIDGE REMOVAL" sheet.
5. For Pile layout see "ABUTMENT DETAILS NO. 1" sheet.

LEGEND:

—·—·—·—·— Indicates existing structure

——— Indicates new construction

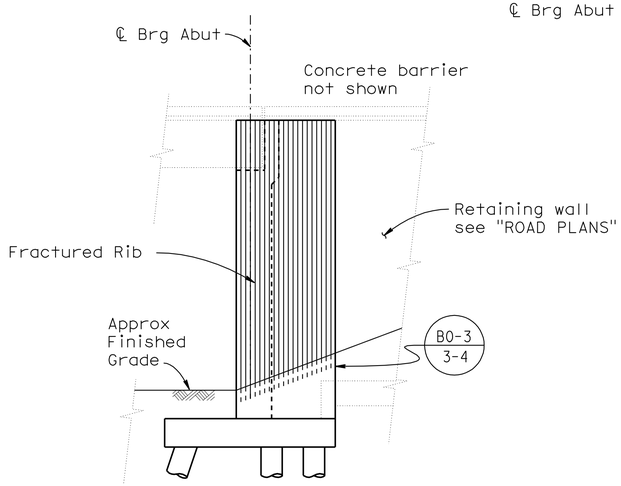

ELEVATION A-A

3/16" = 1'-0"

NOTE: Abut 1 shown, Abut 2 similar.

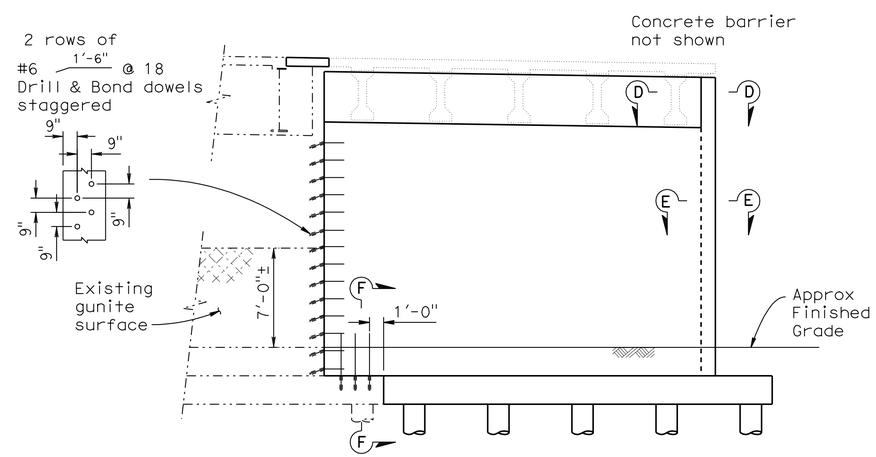

ELEVATION

3/16" = 1'-0"

NOTE: Abut 1 shown, Abut 2 similar.

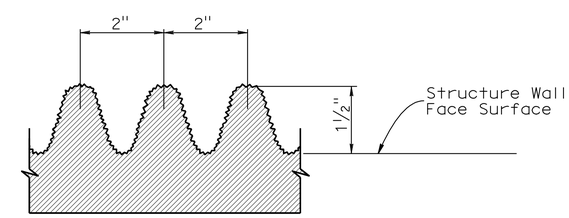

FRACTURED RIB TEXTURE (TYP)

No Scale

NOTE:
THE CONTRACTOR SHALL VERIFY ALL CONTROLLING FIELD DIMENSIONS BEFORE ORDERING OR FABRICATING ANY MATERIAL.

	BY	CHECKED
DESIGN	H. Tuazon	J. Szabo
DETAILS	R. Kirkland	J. Szabo
QUANTITIES	M. Crete	A. McPhee

STATE OF CALIFORNIA
DEPARTMENT OF TRANSPORTATION

DIVISION OF ENGINEERING SERVICES
STRUCTURE DESIGN
DESIGN BRANCH 10

BRIDGE NO. 56-0385
POST MILE 17.43

BROCKTON AVENUE UC (WIDEN)
ABUTMENT LAYOUT

STRUCTURES DESIGN DETAIL SHEET (ENGLISH) (REV. 10/25/05)

ORIGINAL SCALE IN INCHES FOR REDUCED PLANS 0 1 2 3

CU 08
EA 448401

DISREGARD PRINTS BEARING EARLIER REVISION DATES → 7-01-10 10-05-10

REVISION DATES

SHEET 4 OF 18

FILE => 560385fa_lo04.dgn

USERNAME => trlim DATE PLOTTED => 30-APR-2011 TIME PLOTTED => 14:48

DIST	COUNTY	ROUTE	POST MILES TOTAL PROJECT	SHEET No	TOTAL SHEETS
08	Riv	91	15.6/21.6	1755	2028

REGISTERED CIVIL ENGINEER 11-30-10 DATE

4-25-11
PLANS APPROVAL DATE

REGISTERED PROFESSIONAL ENGINEER HUAN VU No. 60696 Exp. 12-31-10 CIVIL STATE OF CALIFORNIA

The State of California or its officers or agents shall not be responsible for the accuracy or completeness of electronic copies of this plan sheet.

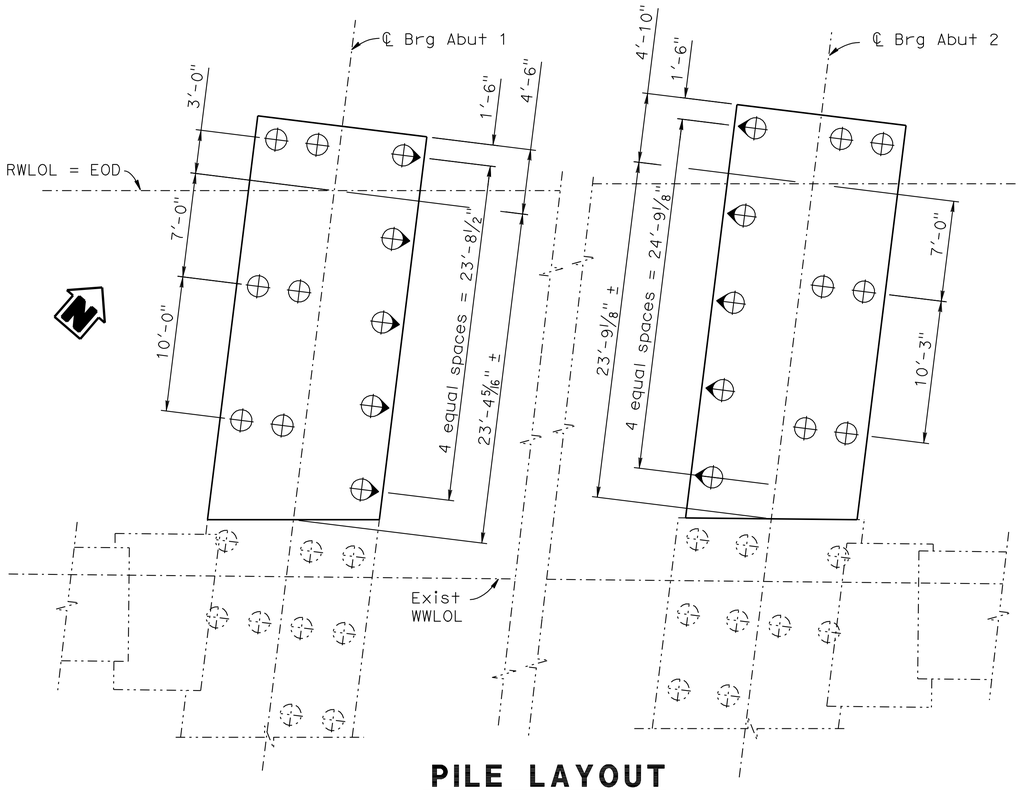

PILE LAYOUT

3/16" = 1'-0"

LEGEND:

- ⊕ Indicates vertical driven concrete pile
- ⊕ Indicates battered driven concrete pile
- Indicates existing construction
- Indicates new construction

NOTE:
THE CONTRACTOR SHALL VERIFY ALL CONTROLLING FIELD DIMENSIONS BEFORE ORDERING OR FABRICATING ANY MATERIAL.

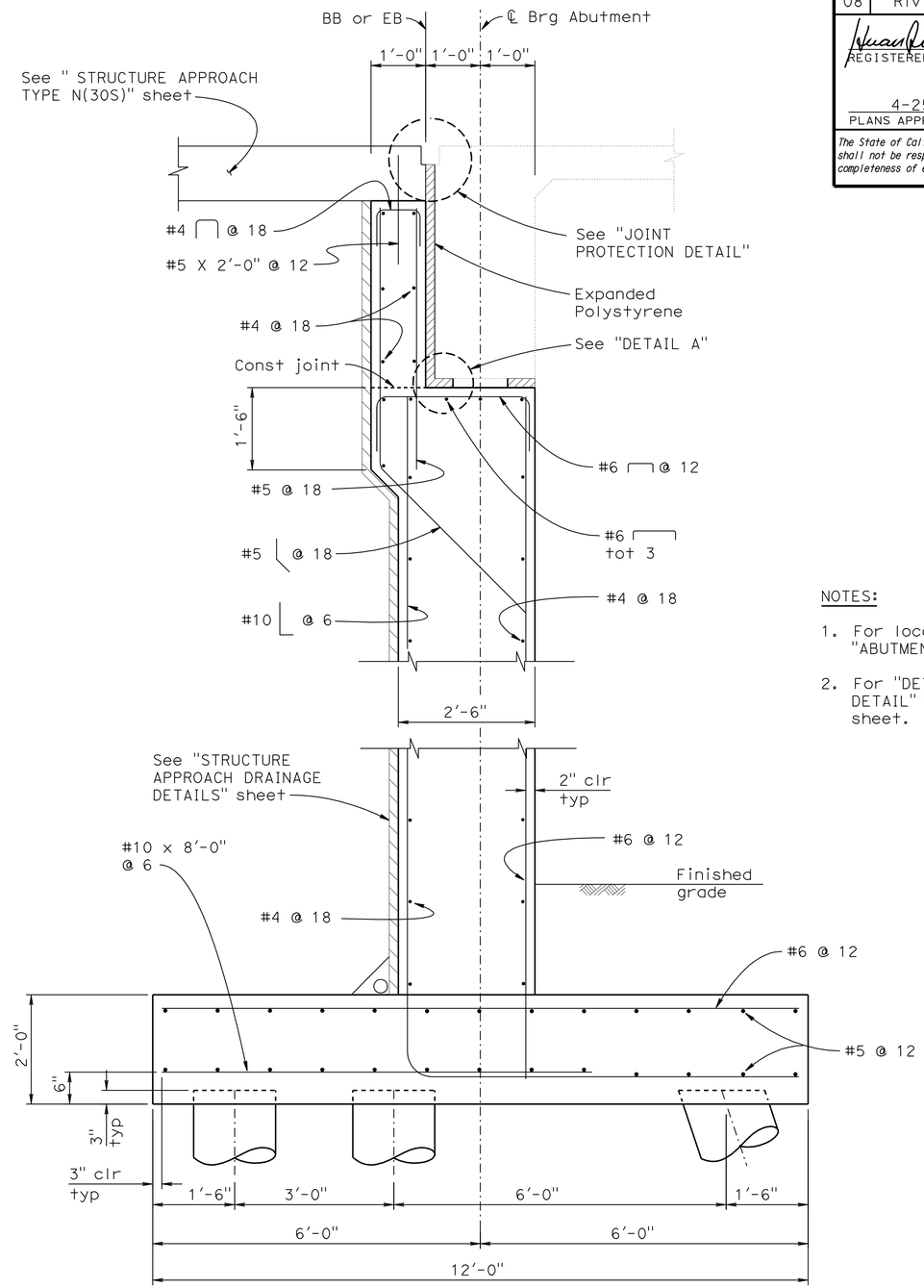

SECTION B-B

3/4" = 1'-0"

NOTES:

1. For location of "SECTION B-B" see "ABUTMENT LAYOUT" sheet.
2. For "DETAIL A" and "JOINT PROTECTION DETAIL" see "ABUTMENT DETAILS NO. 2" sheet.

	BY	CHECKED
DESIGN	H. Tuazon	J. Szabo
DETAILS	R. Kirkland	J. Szabo
QUANTITIES	M. Crete	A. McPhee

STATE OF CALIFORNIA
DEPARTMENT OF TRANSPORTATION

DIVISION OF ENGINEERING SERVICES
STRUCTURE DESIGN
DESIGN BRANCH 10

BRIDGE NO. 56-0385
POST MILE 17.43

BROCKTON AVENUE UC (WIDEN)
ABUTMENT DETAILS NO. 1

STRUCTURES DESIGN DETAIL SHEET (ENGLISH) (REV. 10/25/05)

ORIGINAL SCALE IN INCHES FOR REDUCED PLANS 0 1 2 3

CU 08
EA 448401

DISREGARD PRINTS BEARING EARLIER REVISION DATES

REVISION DATES: ~~7-01-09~~ ~~7-01-10~~ ~~10-05-10~~ 11-30-10

SHEET 5 OF 18

FILE => 560385fadt05.dgn

USERNAME => rtrim DATE PLOTTED => 30-APR-2011 TIME PLOTTED => 14:48

DIST	COUNTY	ROUTE	POST MILES TOTAL PROJECT	SHEET No	TOTAL SHEETS
08	Riv	91	15.6/21.6	1756	2028

REGISTERED CIVIL ENGINEER 11-30-10 DATE

4-25-11
PLANS APPROVAL DATE

REGISTERED PROFESSIONAL ENGINEER HUAN VU No. 60696 Exp. 12-31-10 CIVIL STATE OF CALIFORNIA

The State of California or its officers or agents shall not be responsible for the accuracy or completeness of electronic copies of this plan sheet.

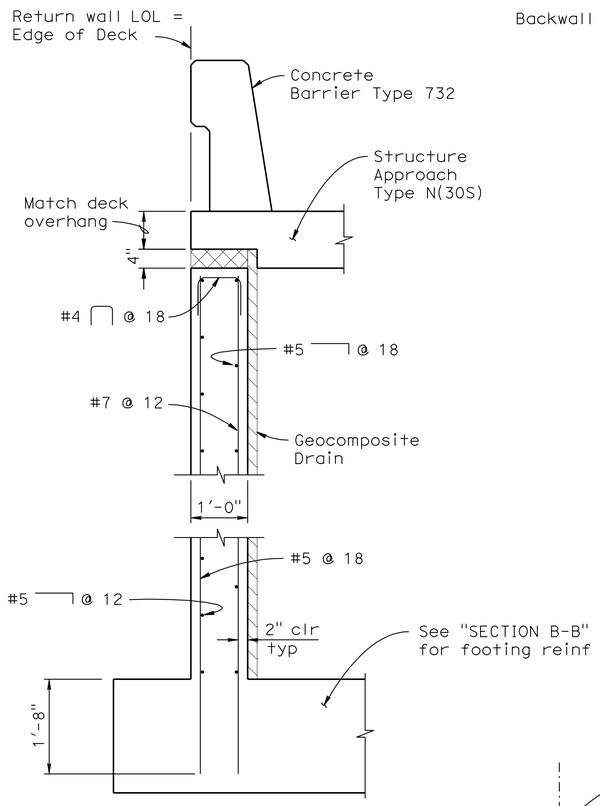

SECTION C-C

3/4" = 1'-0"

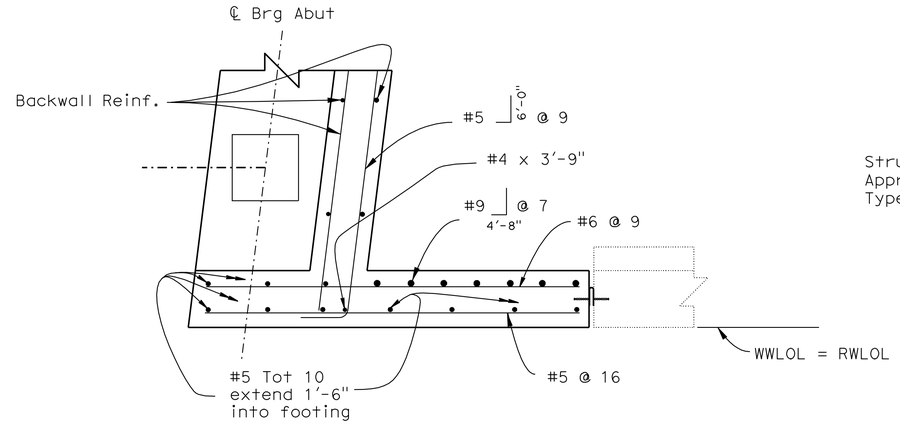

SECTION D-D

3/4" = 1'-0"

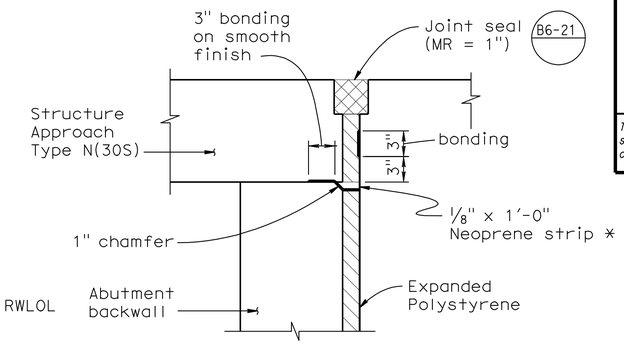

* Place prior to backfilling the Abutment backwall (fold neoprene into chamfer)

JOINT PROTECTION DETAIL

No Scale

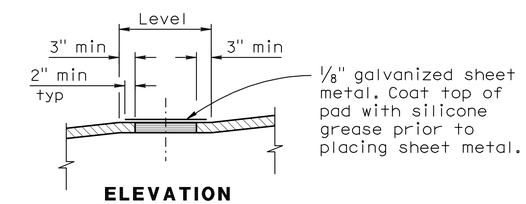

ELEVATION

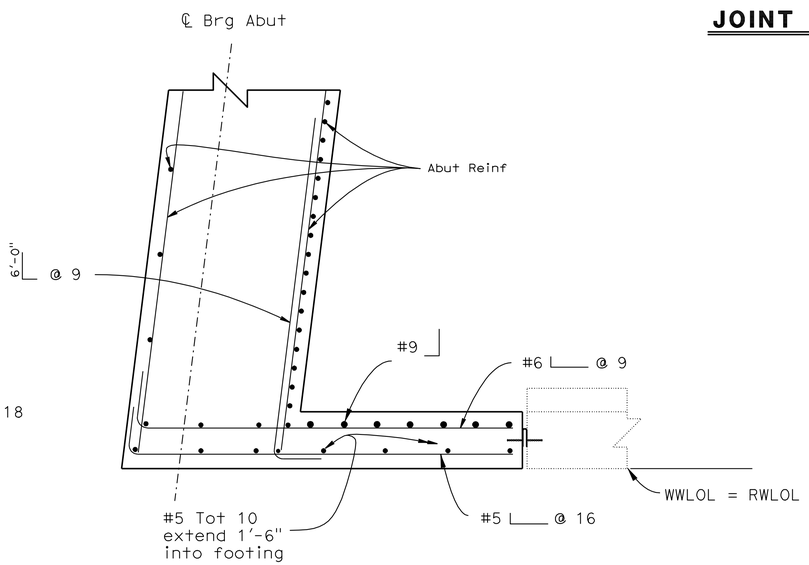

SECTION E-E

3/4" = 1'-0"

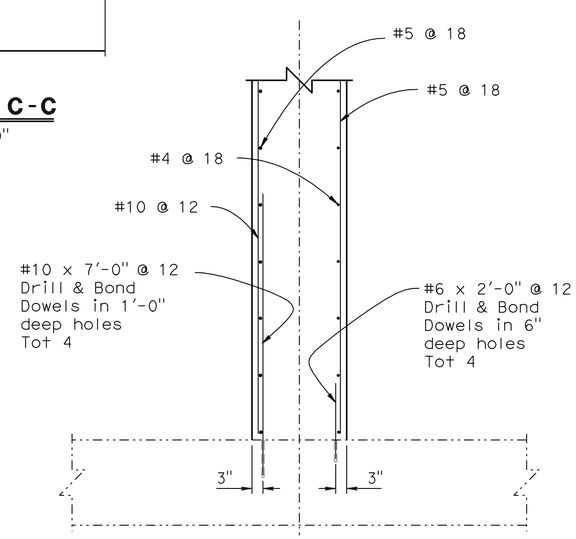

SECTION F-F

1/2" = 1'-0"

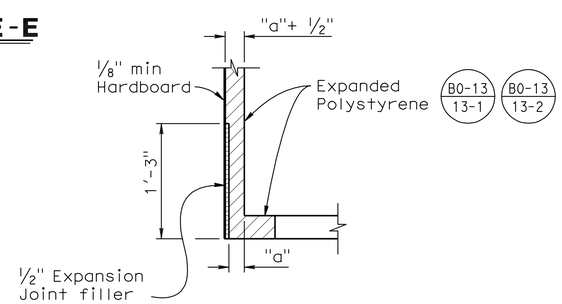

DETAIL A

No Scale

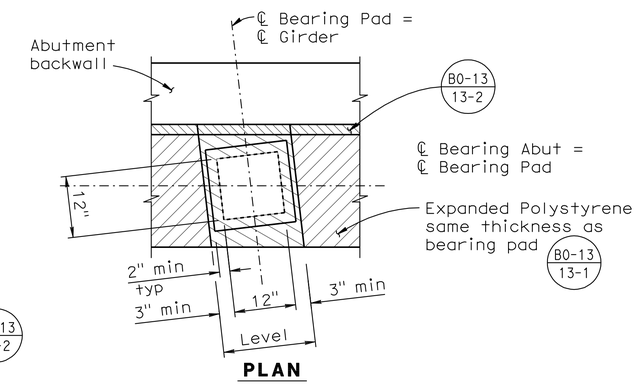

PLAN

BEARING PAD DETAIL

No Scale

NOTES:

1. For location of "SECTION C-C", "SECTION D-D", "SECTION E-E" & "SECTION F-F" see "ABUTMENT LAYOUT" sheet.

NOTE:
THE CONTRACTOR SHALL VERIFY ALL CONTROLLING FIELD DIMENSIONS BEFORE ORDERING OR FABRICATING ANY MATERIAL.

	BY	CHECKED
DESIGN	H. Tuazon	J. Szabo
DETAILS	R. Kirkland	J. Szabo
QUANTITIES	M. Crete	A. McPhee

STATE OF CALIFORNIA
DEPARTMENT OF TRANSPORTATION

DIVISION OF ENGINEERING SERVICES
STRUCTURE DESIGN
DESIGN BRANCH 10

BRIDGE NO. 56-0385
POST MILE 17.43

BROCKTON AVENUE UC (WIDEN)
ABUTMENT DETAILS NO. 2

STRUCTURES DESIGN DETAIL SHEET (ENGLISH) (REV. 10/25/05)

ORIGINAL SCALE IN INCHES FOR REDUCED PLANS 0 1 2 3

CU 08
EA 448401

DISREGARD PRINTS BEARING EARLIER REVISION DATES → 7-08-09 7-06-10 10-05-10

REVISION DATES

SHEET 6 OF 18

FILE => 560385fadt06.dgn

USERNAME => trilim DATE PLOTTED => 30-APR-2011 TIME PLOTTED => 14:48

DIST	COUNTY	ROUTE	POST MILES TOTAL PROJECT	SHEET No	TOTAL SHEETS
08	Riv	91	15.6/21.6	1757	2028

REGISTERED CIVIL ENGINEER 11-30-10 DATE

4-25-11
PLANS APPROVAL DATE

REGISTERED PROFESSIONAL ENGINEER HUAN VU No. 60696 Exp. 12-31-10 CIVIL STATE OF CALIFORNIA

The State of California or its officers or agents shall not be responsible for the accuracy or completeness of electronic copies of this plan sheet.

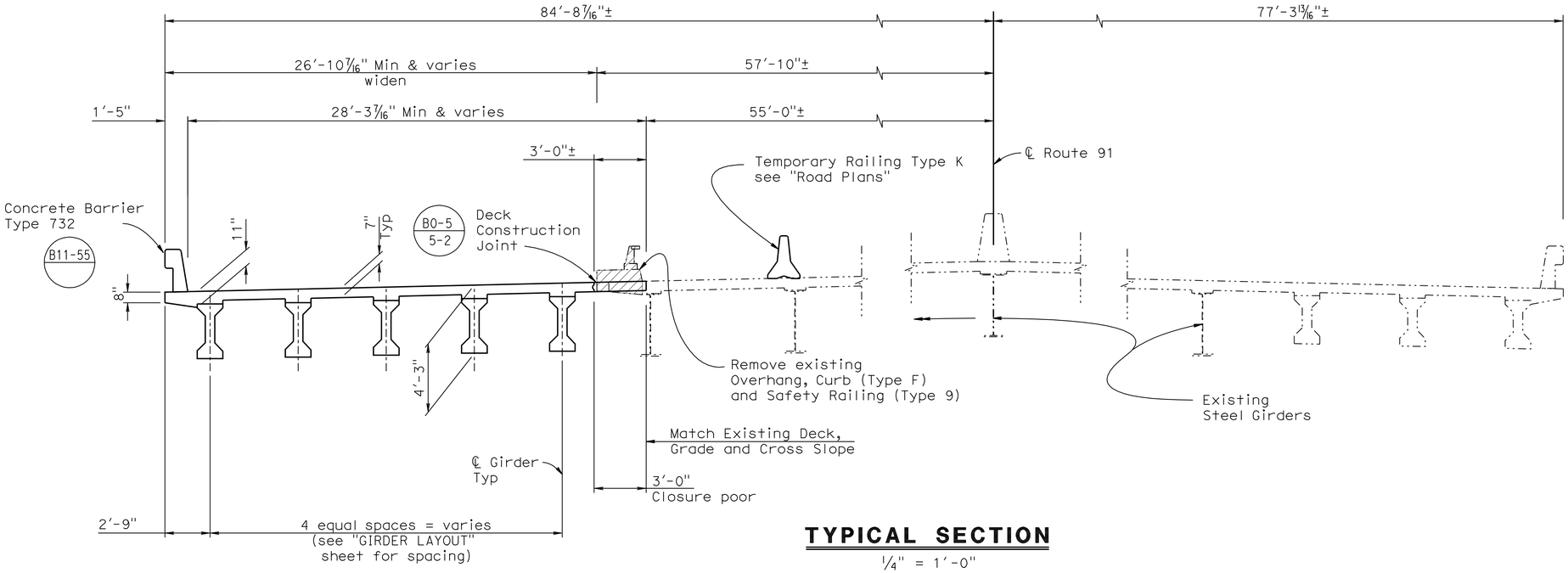

TYPICAL SECTION

1/4" = 1'-0"

NOTE:

1. Closure pour concrete shall be poured after 10 days from the adjacent concrete pour.

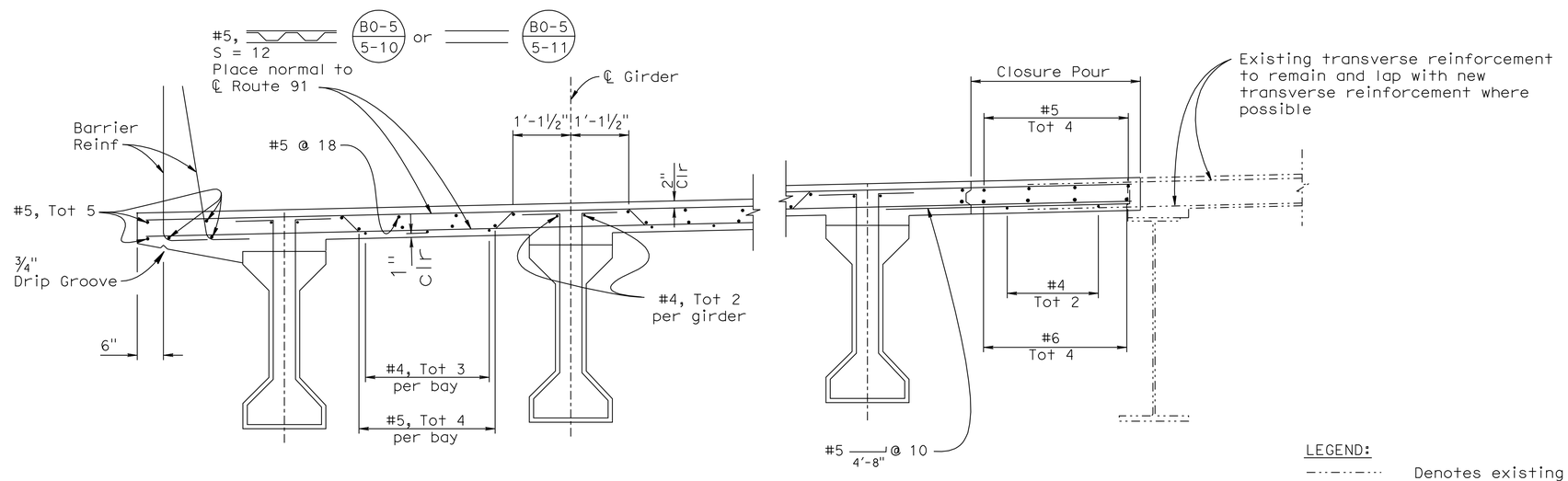

PART TYPICAL SECTION

3/4" = 1'-0"

NOTE:
THE CONTRACTOR SHALL VERIFY ALL CONTROLLING FIELD DIMENSIONS BEFORE ORDERING OR FABRICATING ANY MATERIAL.

LEGEND:

- Denotes existing construction
- Denotes new construction
- Denotes limits of bridge removal (Portion)

	BY	CHECKED
DESIGN	H. Tuazon	J. Szabo
DETAILS	R. Kirkland	J. Szabo
QUANTITIES	M. Crete	A. McPhee

STATE OF CALIFORNIA
DEPARTMENT OF TRANSPORTATION

DIVISION OF ENGINEERING SERVICES
STRUCTURE DESIGN
DESIGN BRANCH 10

BRIDGE NO. 56-0385
POST MILE 17.43

BROCKTON AVENUE UC (WIDEN)
TYPICAL SECTION

STRUCTURES DESIGN DETAIL SHEET (ENGLISH) (REV. 10/25/05)

ORIGINAL SCALE IN INCHES FOR REDUCED PLANS 0 1 2 3

CU 08
EA 448401

DISREGARD PRINTS BEARING EARLIER REVISION DATES

REVISION DATES: 7-01-09 7-01-10 10-05-10

SHEET 7 OF 18

FILE => 560385kts07.dgn

USERNAME => trflm DATE PLOTTED => 30-APR-2011 TIME PLOTTED => 14:48

DIST	COUNTY	ROUTE	POST MILES TOTAL PROJECT	SHEET No	TOTAL SHEETS
08	Riv	91	15.6/21.6	1758	2028

REGISTERED CIVIL ENGINEER 11-30-10 DATE

4-25-11
PLANS APPROVAL DATE

REGISTERED PROFESSIONAL ENGINEER HUAN VU No. 60696 Exp. 12-31-10 CIVIL STATE OF CALIFORNIA

The State of California or its officers or agents shall not be responsible for the accuracy or completeness of electronic copies of this plan sheet.

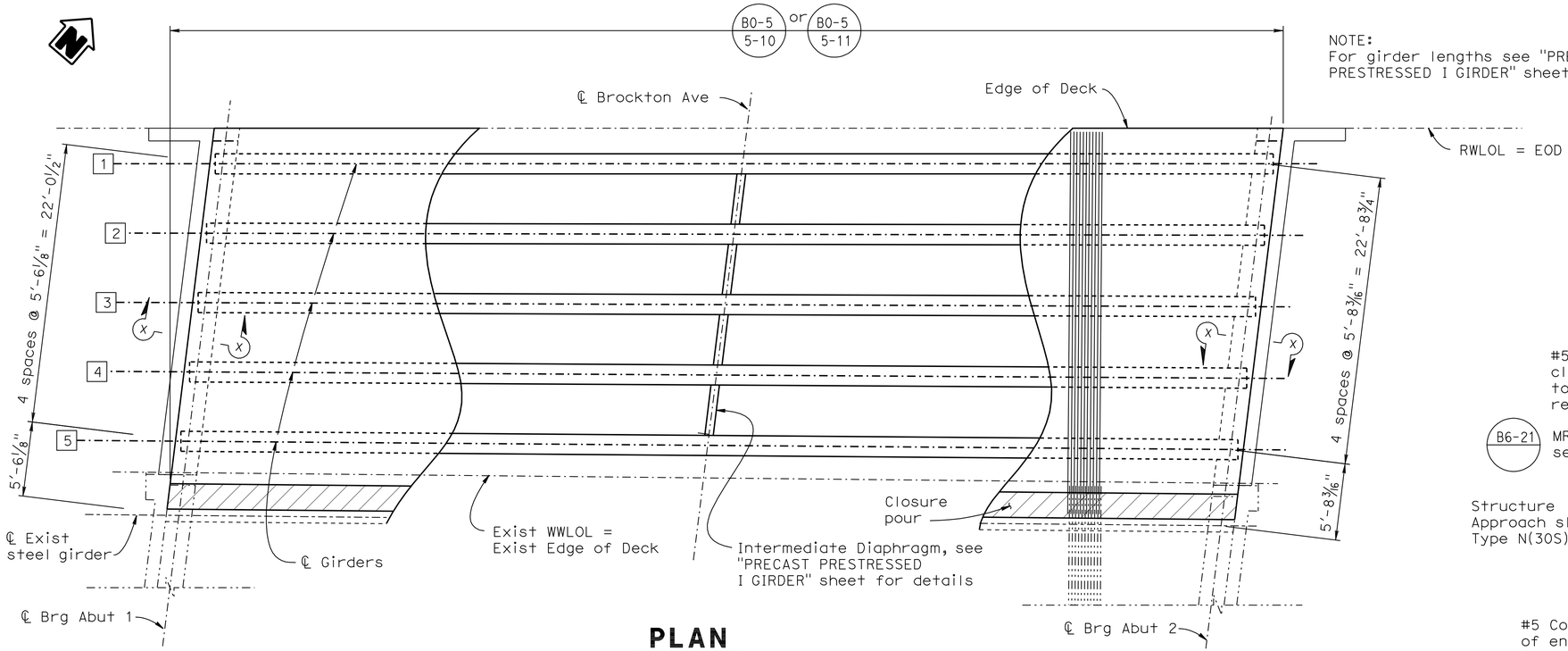

NOTE:
For girder lengths see "PRECAST PRESTRESSED I GIRDER" sheet.

PLAN

3/16" = 1'-0"

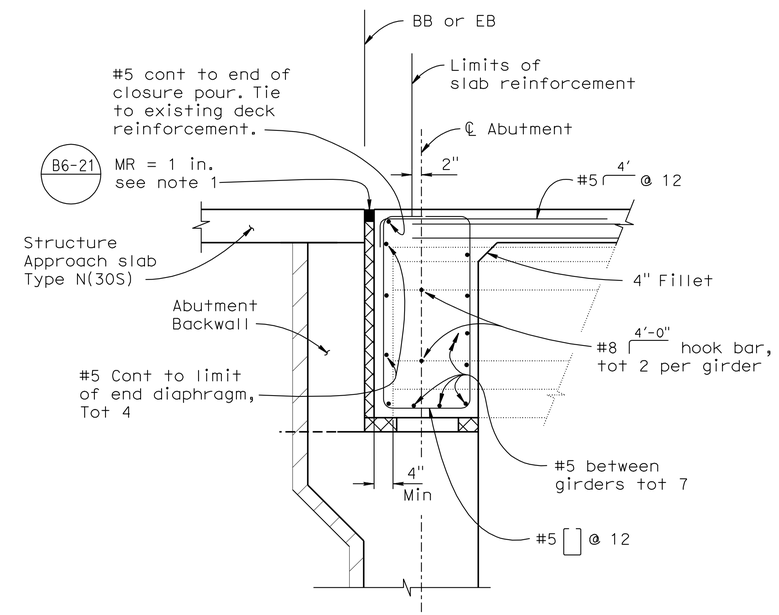

SECTION X-X

3/4" = 1'-0"

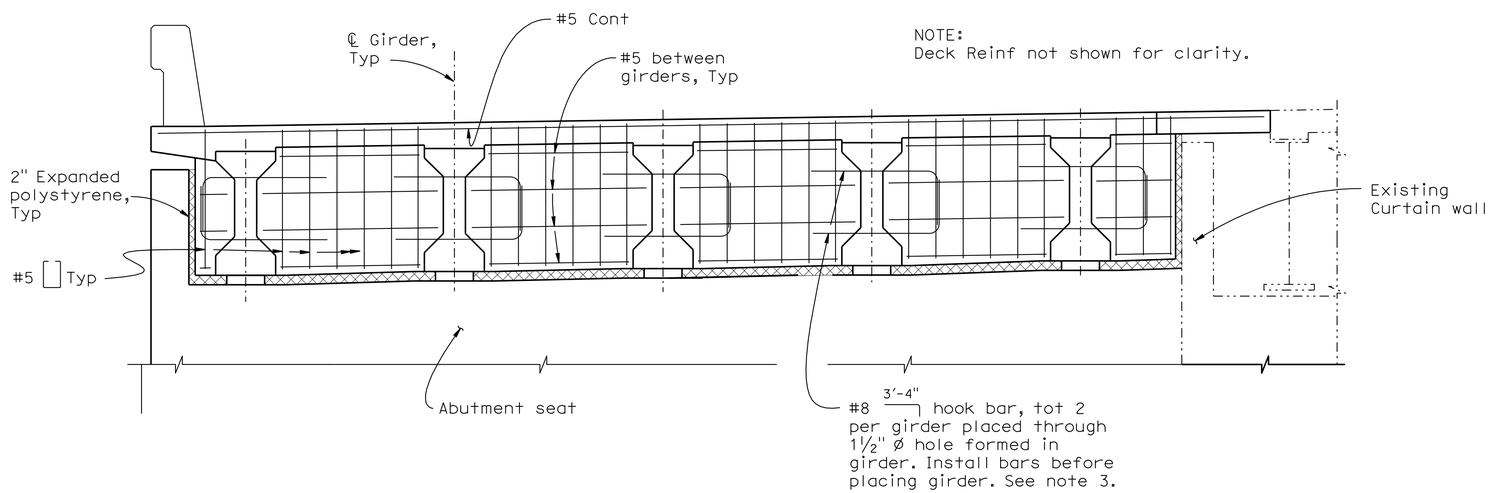

NOTE:
Deck Reinf not shown for clarity.

END DIAPHRAGM ELEVATION

1/2" = 1'-0"

NOTE:
THE CONTRACTOR SHALL VERIFY ALL CONTROLLING FIELD DIMENSIONS BEFORE ORDERING OR FABRICATING ANY MATERIAL.

NOTES:

1. Splice new joint seal with existing joint seal.
2. For information not shown, see "PRECAST PRESTRESSED I GIRDER" sheet.
3. For bars located at exterior girders, adjust accordingly to fit.

LEGEND:

-·-·-·-·- Denotes existing construction
——— Denotes new construction

	BY	CHECKED
DESIGN	H. Tuazon	J. Szabo
DETAILS	R. Kirkland	J. Szabo
QUANTITIES	M. Crete	A. McPhee

STATE OF CALIFORNIA
DEPARTMENT OF TRANSPORTATION

DIVISION OF ENGINEERING SERVICES
STRUCTURE DESIGN
DESIGN BRANCH 10

BRIDGE NO. 56-0385
POST MILE 17.43

BROCKTON AVENUE UC (WIDEN)
GIRDER LAYOUT

STRUCTURES DESIGN DETAIL SHEET (ENGLISH) (REV. 10/25/05)

ORIGINAL SCALE IN INCHES FOR REDUCED PLANS 0 1 2 3

CU 08
EA 448401

DISREGARD PRINTS BEARING EARLIER REVISION DATES

REVISION DATES: 7/02-09 7-01-10 10-05-10

SHEET 8 OF 18

FILE => 560385lg_lo08.dgn

USERNAME => trlim DATE PLOTTED => 30-APR-2011 TIME PLOTTED => 14:48

DIST.	COUNTY	ROUTE	POST MILES TOTAL PROJECT	SHEET NO.	TOTAL SHEETS
08	Riv	91	15.6/21.6	1759	2028

REGISTERED ENGINEER - CIVIL 11-30-10

4-25-11
PLANS APPROVAL DATE

REGISTERED PROFESSIONAL ENGINEER HUAN VU No. 60696 Exp. 12-31-10 CIVIL STATE OF CALIFORNIA

The State of California or its officers or agents shall not be responsible for the accuracy or completeness of electronic copies of this plan sheet.

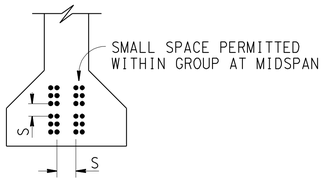

CLEARANCES FOR PRETENSIONED STRANDS

1. Strands may be bundled in groups consisting of 3 vertically, 2 horizontally and separated at the ends
2. The Min distance "S" between groups or individual strands is 1½" for ⅜" ø strands, 1¾" for ½" ø strands, 2" for 0.6" ø strands
3. "S" is measured between centers of adjacent strands
4. Approval for Engineer is required for deviation

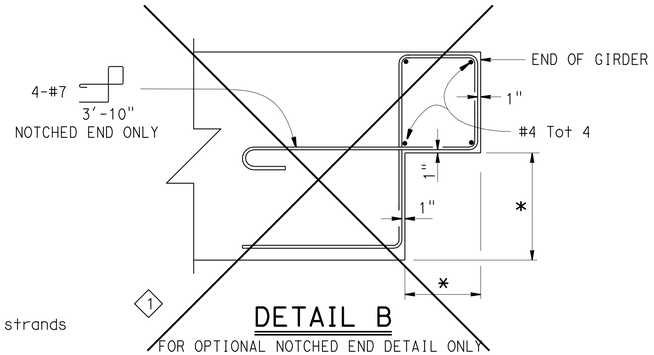

DETAIL B

FOR OPTIONAL NOTCHED END DETAIL ONLY

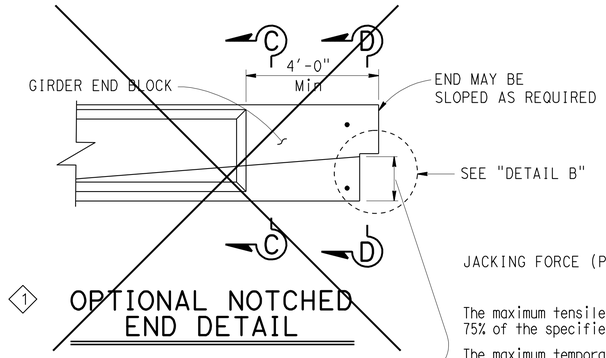

OPTIONAL NOTCHED END DETAIL

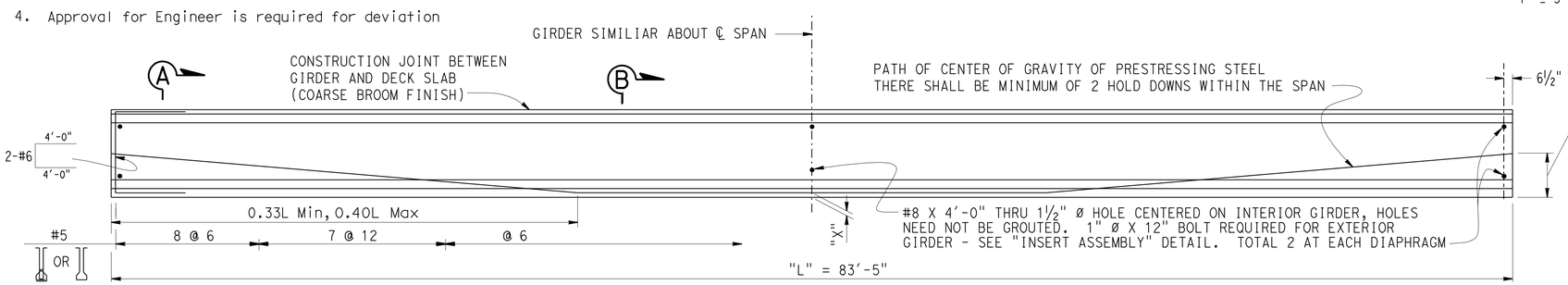

ELEVATION

~~* ENGINEER TO FILL IN THESE VALUES, THEN DELETE THIS NOTE~~

GENERAL NOTES

JACKING FORCE (P): The jacking force required at the point of control along the span. The jacking force does not include any fabrication specific losses.

The maximum tensile stress in the prestressing steel upon release shall not exceed 75% of the specified minimum ultimate tensile strength of the prestressing steel.

The maximum temporary tensile stress (jacking stress) in the prestressing steel shall not exceed 80% of the specified minimum ultimate tensile strength of the prestressing steel.

CONCRETE STRENGTH: f'ci is at time of initial stressing
f'c is at 28 days

DEFLECTION COMPONENTS: Informational - to be used in setting screed line elevations

Screed line elevations for deck concrete will be determined by the Engineer.

Contractor may interpolate "P" and "X" values between limits shown, as approved by the Engineer.

Use epoxy coated reinforcement in Environmental Area III

Girder location or designation and length	Jacking Force (P) (Kips) "X"		"Y" (in)	Concrete Strength (ksi) f'ci	Concrete Strength (ksi) f'c	Midspan Dead Load Deflection (inches) Deck	Midspan Dead Load Deflection (inches) Rail
1 2 3 4 5	4"	870	20	6	7	1.27	0.06
	6"	940		6	7	1.27	0.06

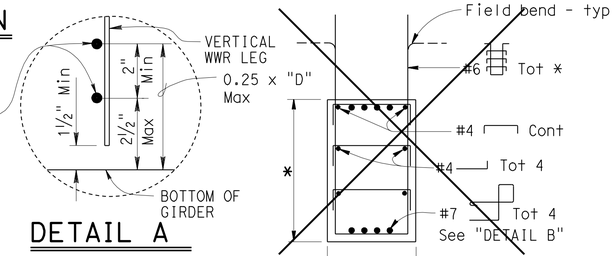

DETAIL A

SECTION D-D

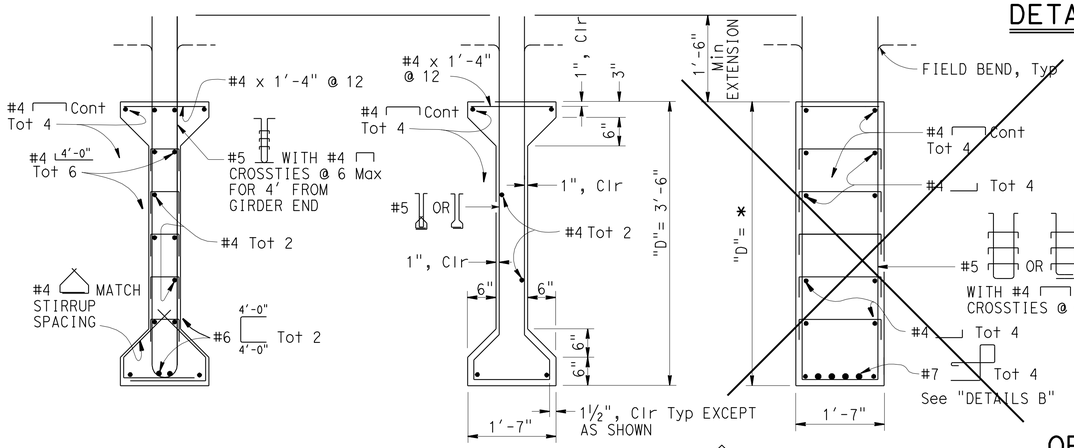

SECTION A-A

SECTION B-B

1 SECTION C-C

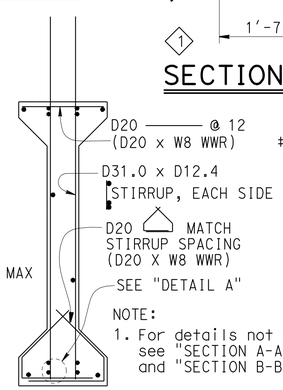

NOTE:
1. For details not shown, see "SECTION A-A" and "SECTION B-B"

OPTIONAL WELDED WIRE REINFORCEMENT (WWR) DETAIL

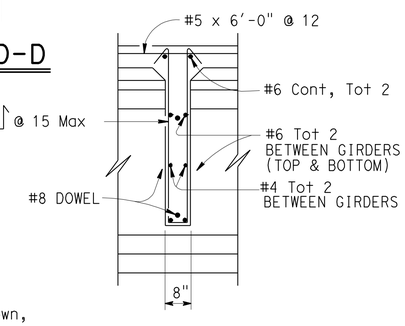

SECTION E-E

WWR NOTE: MANUFACTURER'S SHOP DRAWING SHALL CONFORM TO THE REINFORCEMENT SHOWN ON THIS SHEET AS NOTED AND THE SPECIAL PROVISIONS

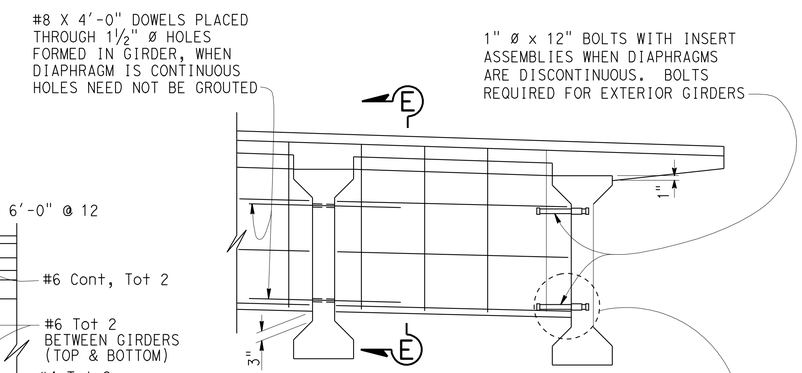

INTERMEDIATE DIAPHRAGM

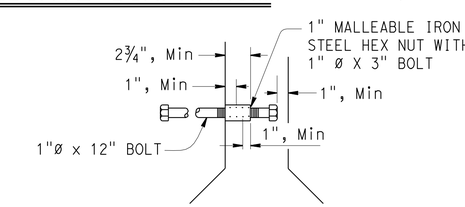

INSERT ASSEMBLY

1 Detail not used

REVISED STANDARD DRAWING

FILE NO. xs 1-120-e

APPROVED BY Jim Ma
RESPONSIBLE TECHNICAL SPECIALIST
APPROVAL DATE 02-01-2010

RELEASED BY Susan Hida
RESPONSIBLE OFFICE CHIEF
RELEASE DATE 02-01-2010

STATE OF CALIFORNIA
DEPARTMENT OF TRANSPORTATION

DIVISION OF ENGINEERING SERVICES

BRIDGE NO. 59-0385
POST MILE 17.43

BROCKTON AVE UC (WIDEN)
PRECAST PRESTRESSED I GIRDER

DS OSD 2147A (ENGLISH STANDARD DRAWING "XS" BORDER REV. 01/11/08)

ORIGINAL SCALE IN INCHES FOR REDUCED PLANS 0 1 2 3

CU 08
EA 448401

DISREGARD PRINTS BEARING EARLIER REVISION DATES

REVISION DATES (PRELIMINARY STAGE ONLY) 10-31-06 11-06-06 12-26-07 07-21-08 08-01-08 08-05-08 7-01-10

SHEET 9 OF 18

560385lgdt09.dgn USERNAME => trlim

DATE PLOTTED => 30-APR-2011 TIME PLOTTED => 14:48

DIST	COUNTY	ROUTE	POST MILES TOTAL PROJECT	SHEET No	TOTAL SHEETS
08	Riv	91	15.6/21.6	1760	2028

REGISTERED CIVIL ENGINEER 11-30-10 DATE

4-25-11
PLANS APPROVAL DATE

REGISTERED PROFESSIONAL ENGINEER HUAN VU No. 60696 Exp. 12-31-10 CIVIL STATE OF CALIFORNIA

The State of California or its officers or agents shall not be responsible for the accuracy or completeness of electronic copies of this plan sheet.

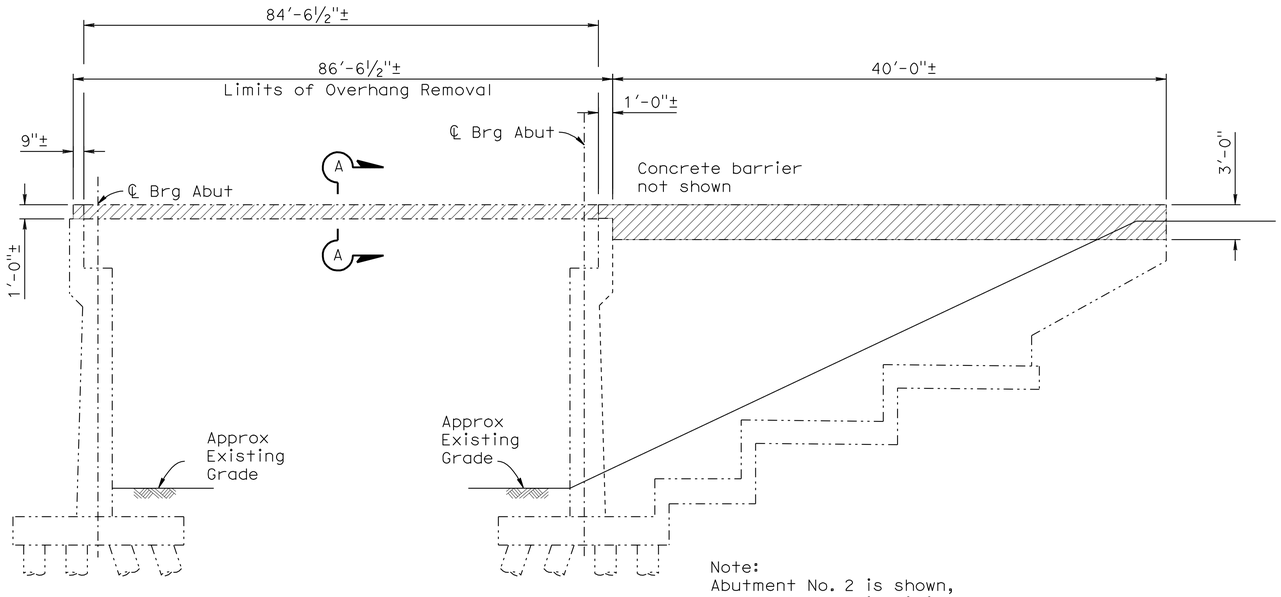

Note:
Abutment No. 2 is shown,
Abutment No. 1 is similar

LIMITS OF REMOVAL
EXISTING ABUTMENT AND WINGWALL

No Scale

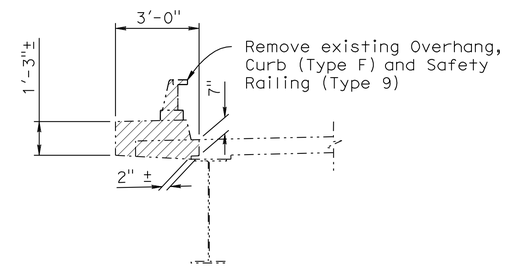

SECTION A-A

LIMITS OF REMOVAL
OVERHANG, CURB (TYPE F) & SAFETY RAILING (TYPE 9)

No Scale

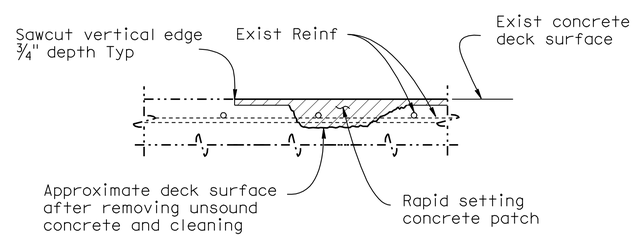

DECK REPAIR DETAIL

No Scale

NOTES:

1. Approximate damaged area is 0.2% of treated area.
2. Location will be determined by the engineer.
3. Reinforcement may be encountered during deck concrete removal and is to remain undamaged.

NOTE:
THE CONTRACTOR SHALL VERIFY ALL CONTROLLING FIELD DIMENSIONS BEFORE ORDERING OR FABRICATING ANY MATERIAL.

LEGEND:

- Denotes existing construction
- Denotes new construction
- Denotes limits of Bridge Removal (Portion)

	BY	CHECKED
DESIGN	H. Tuazon	J. Szabo
DETAILS	R. Kirkland	J. Szabo
QUANTITIES	M. Crete	A. McPhee

STATE OF CALIFORNIA
DEPARTMENT OF TRANSPORTATION

DIVISION OF ENGINEERING SERVICES
STRUCTURE DESIGN
DESIGN BRANCH 10

BRIDGE NO. 56-0385
POST MILE 17.43

BROCKTON AVENUE UC (WIDEN)
MISCELLANEOUS DETAILS

STRUCTURES DESIGN DETAIL SHEET (ENGLISH) (REV. 10/25/05)

ORIGINAL SCALE IN INCHES FOR REDUCED PLANS 0 1 2 3

CU 08
EA 448401

DISREGARD PRINTS BEARING EARLIER REVISION DATES

REVISION DATES: 7/08/09 7-01-10 10-05-10

SHEET 10 OF 18

FILE => 560385miscdt10.dgn

USERNAME => trlim DATE PLOTTED => 30-APR-2011 TIME PLOTTED => 14:48

DIST.	COUNTY	ROUTE	MILE POST TOTAL PROJECT	SHEET NO.	TOTAL SHEETS
08	Riv	91	15.6/21.6	1761	2028

REGISTERED ENGINEER - CIVIL 11-30-10

4-25-11
PLANS APPROVAL DATE

The State of California or its officers or agents shall not be responsible for the accuracy or completeness of electronic copies of this plan sheet.

REGISTERED PROFESSIONAL ENGINEER HUAN VU No. 60696 Exp. 12-31-10 CIVIL STATE OF CALIFORNIA

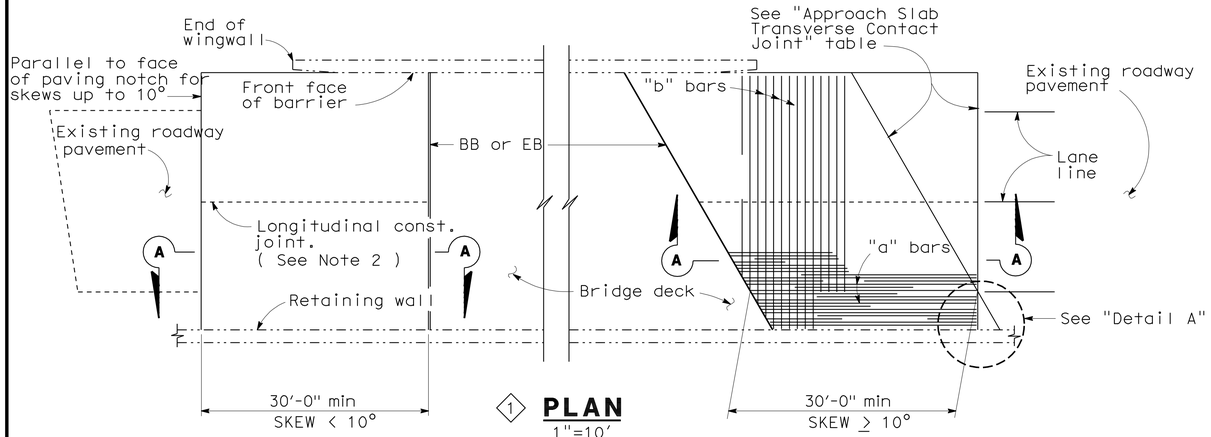

1 **PLAN**
1"=10'

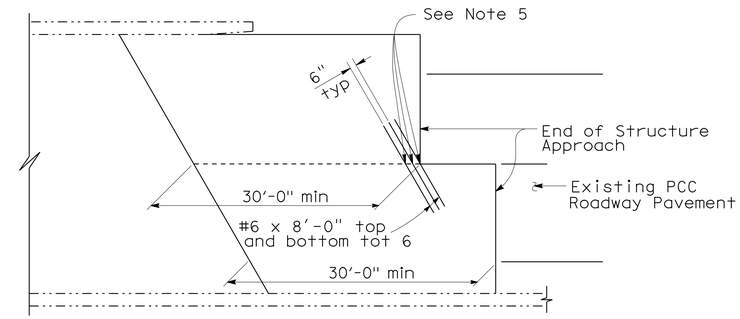

STRUCTURE APPROACH - END STAGGER DETAIL
No Scale

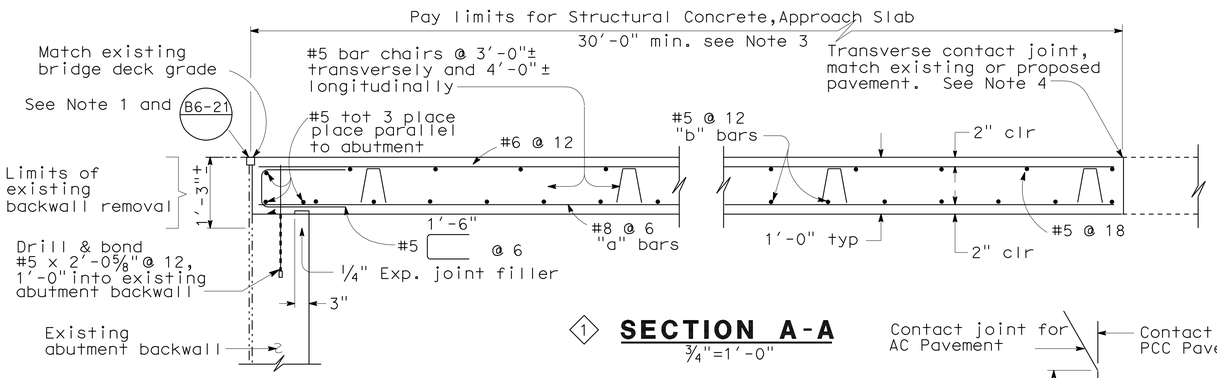

1 **SECTION A-A**
¾"=1'-0"

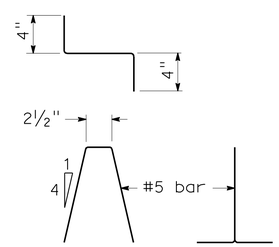

BAR CHAIR DETAIL
1½"=1'-0"

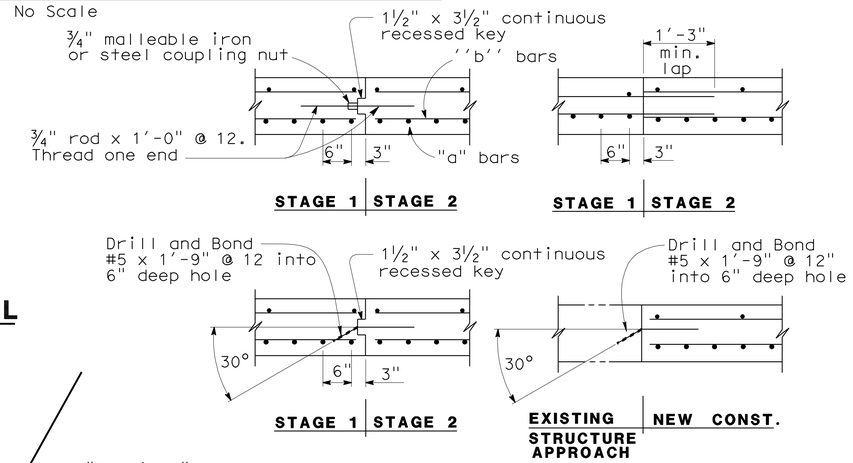

LONGITUDINAL CONSTRUCTION JOINT ALTERNATIVES
¾"=1'-0"

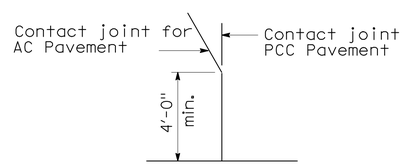

DETAIL A
No Scale

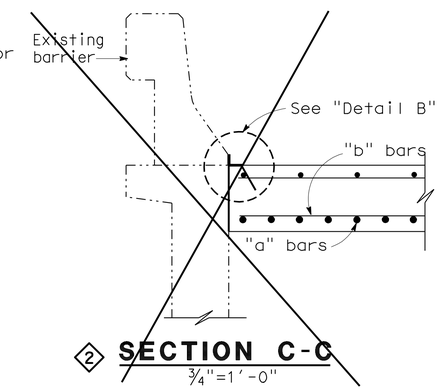

2 **SECTION C-C**
¾"=1'-0"

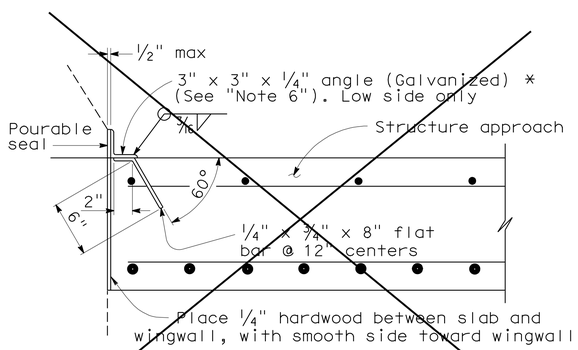

*(TO BE USED WITH TYPE 25 OR TYPE 27 CONCRETE BARRIER)
2

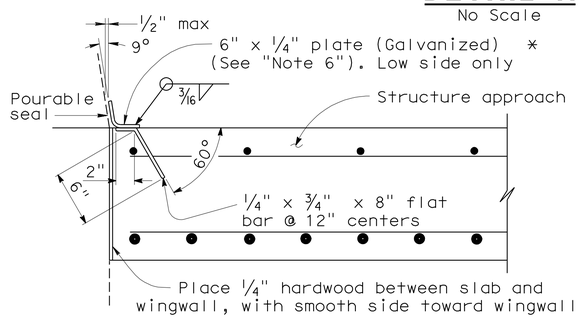

*(TO BE USED WITH TYPE 732 OR TYPE 736 CONCRETE BARRIER)

DETAIL B
1½"=1'-0"

APPROACH SLAB TRANSVERSE CONTACT JOINT		
APPROACH SKEW	WITH AC ROADWAY PAVEMENT	WITH PCC ROADWAY PAVEMENT
< 10°	Parallel to face of paving notch	Parallel to face of paving notch
10°- 45°	Parallel to face of P N use (Detail A)	Stagger lines 24' to 36' apart
> 45°	Parallel to face of P N use (Detail A)	Stagger at each lane line

NOTES:

1. Sealed joint, for M.R. see Structure Plans. Adjust bar reinforcement to clear a sawcut for sealed joint, when required.
2. Longitudinal construction joints, when permitted by Engineer, shall be located on lane lines.
3. Transverse contact joint shall be a minimum of 5'-0" from an existing or constructed weakened plane joint.
4. For transverse contact joint with new PCC paving, refer to Standard Plan P10.
5. Couplers are required for stage construction.
6. End angle or plate at beginning of barrier transition, end of wingwall or end of structure approach as applicable.

NOTE:
THE CONTRACTOR SHALL VERIFY ALL CONTROLLING FIELD DIMENSIONS BEFORE ORDERING OR FABRICATING ANY MATERIAL.

STANDARD DRAWING

RELEASE DATE 3/14/05	DESIGN	BY M.TRAFFALIS	CHECKED E.THORKILDSEN	RELEASED BY
	DETAILS	BY R.YEE	CHECKED E.THORKILDSEN	
FILE NO. xs3-130e	SUBMITTED	BY M.HA	DRAWING DATE 8/92	OFFICE CHIEF

1 Revised detail
2 Not used

STATE OF CALIFORNIA DEPARTMENT OF TRANSPORTATION

DIVISION OF ENGINEERING SERVICES

BRIDGE NO. 56-0385
MILE POST 17.4

BROCKTON AVE UC (WIDEN)
STRUCTURE APPROACH TYPE R(30S)

DS OSD 2147A (ENGLISH) (REV. X/XX/XX)

ORIGINAL SCALE IN INCHES FOR REDUCED PLANS 0 1 2 3

CU 08
EA 448400

DISREGARD PRINTS BEARING EARLIER REVISION DATES 7/02/09

REVISION DATES (PRELIMINARY STAGE ONLY)

SHEET 11 OF 18

USERNAME => trlim

560385ssa11.dgn

DATE PLOTTED => 30-APR-2011 TIME PLOTTED => 14:48

DIST.	COUNTY	ROUTE	MILE POST TOTAL PROJECT	SHEET NO.	TOTAL SHEETS
08	Riv	91	15.6/21.6	1762	2028

REGISTERED ENGINEER - CIVIL 11-30-10

4-25-11
PLANS APPROVAL DATE

The State of California or its officers or agents shall not be responsible for the accuracy or completeness of electronic copies of this plan sheet.

REGISTERED PROFESSIONAL ENGINEER HUAN VU No. 60696 Exp. 12-31-10 CIVIL STATE OF CALIFORNIA

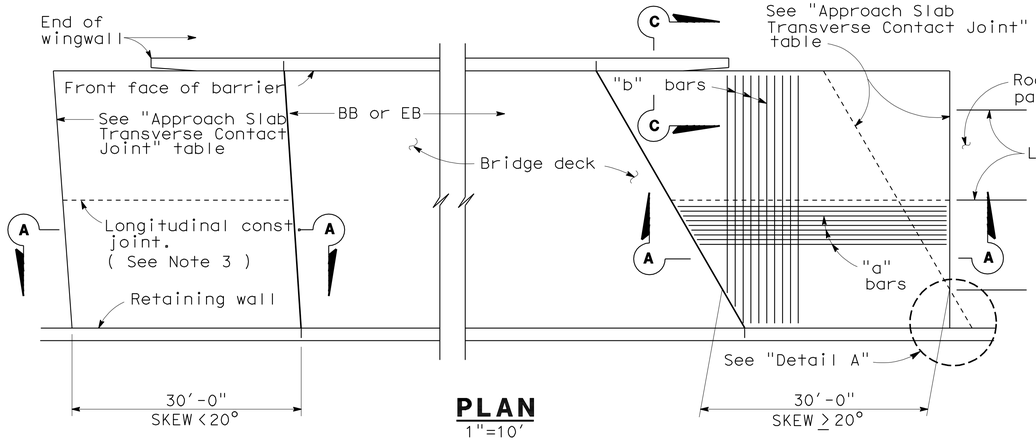

PLAN
1"=10'

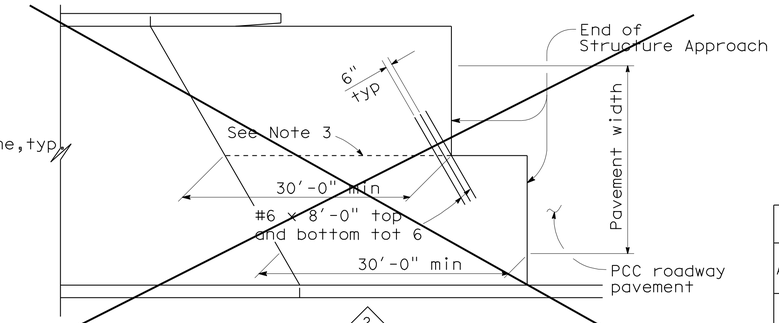

STRUCTURE APPROACH - END STAGGER DETAIL
No Scale

APPROACH SLAB TRANSVERSE CONTACT JOINT		
APPROACH SKEW	WITH AC ROADWAY PAVEMENT	WITH PCC ROADWAY PAVEMENT
< 20°	Parallel to face of paving notch	Parallel to face of paving notch
20° - 45°	Parallel to face of P N use (Detail A)	Stagger lines 24' to 36' apart.
> 45°	Parallel to face of P N use (Detail A)	Stagger at each lane line.

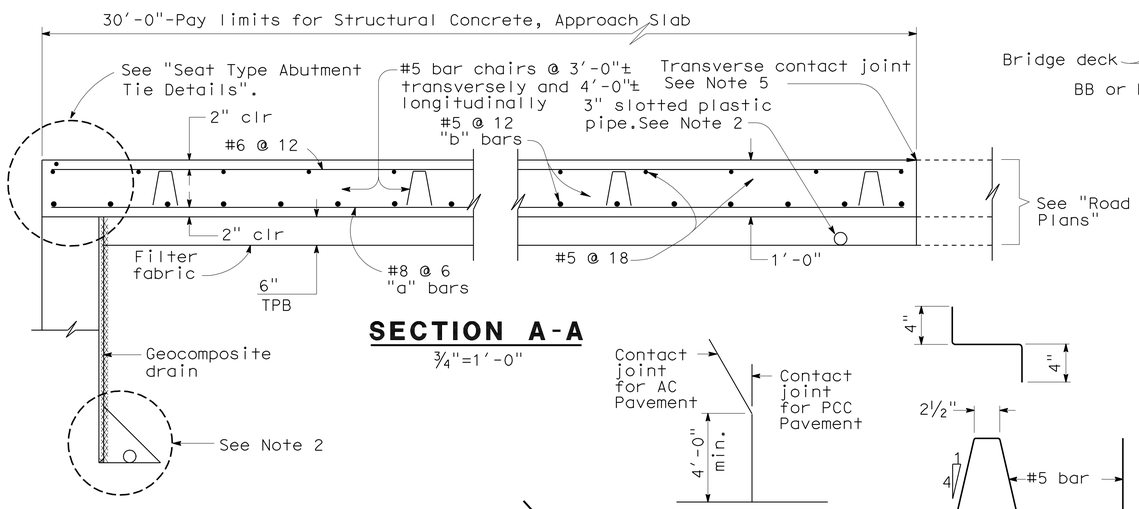

SECTION A-A
¾"=1'-0"

DETAIL A
No Scale

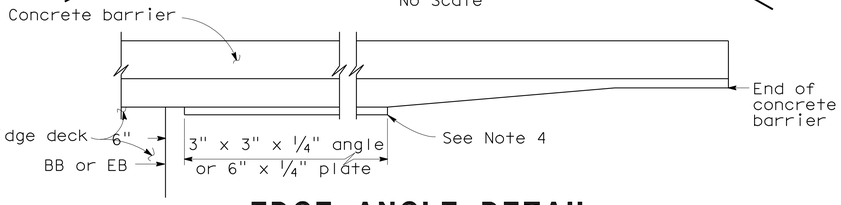

EDGE ANGLE DETAIL
½"=1'-0"

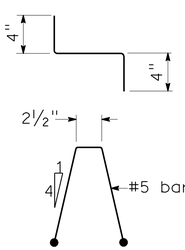

BAR CHAIR DETAIL
1½"=1'-0"

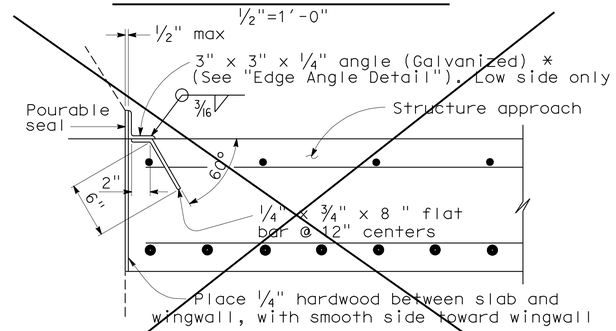

*(TO BE USED WITH TYPE 25 OR TYPE 27 CONCRETE BARRIER)

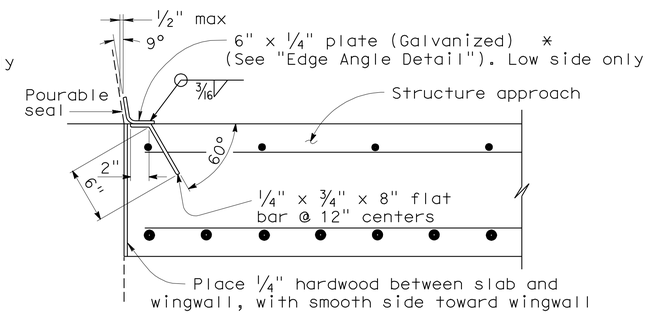

*(TO BE USED WITH TYPE 732 OR TYPE 736 CONCRETE BARRIER)

DETAIL B
1½"=1'-0"

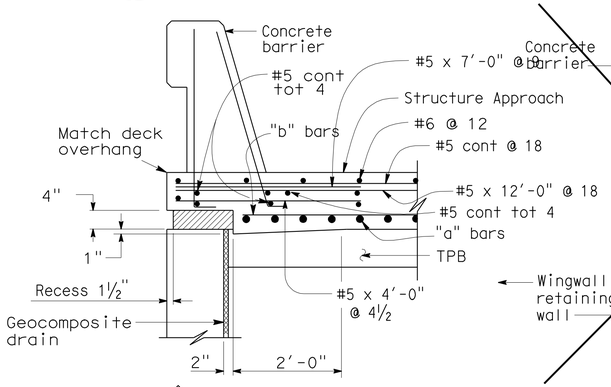

1 TYPE E-1

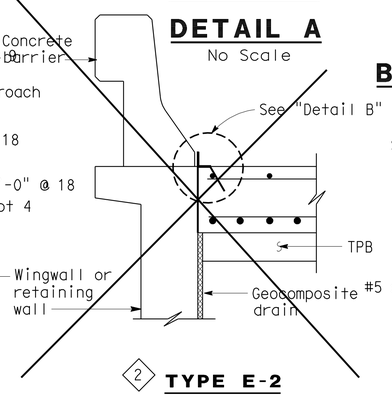

2 TYPE E-2

SECTION C-C
¾"=1'-0"

(Type E-1 to be used,unless otherwise shown on plans)

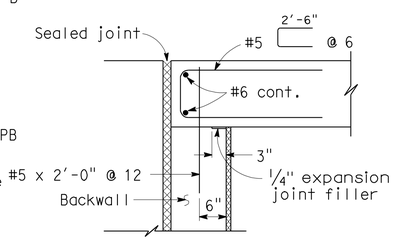

MR ≤ 2"

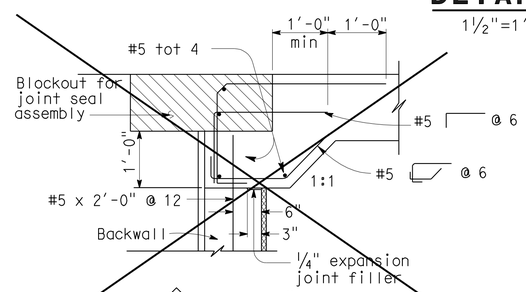

2 MR > 2"

SEAT TYPE ABUTMENT TIE DETAILS (SEE NOTE 1)
¾"=1'-0"

NOTES:

1. For details not shown,see Structure Plans. For MR ≤ 2",adjust bar reinforcement to clear a sawcut for sealed joint,when required.
2. For drainage details,see "Structure Approach Drainage Details" sheet.
3. Longitudinal construction joints,when permitted by the Engineer, shall be located on lane lines.
4. End angle or plate at beginning of barrier transition, end of wingwall or end of structure approach as applicable.
5. For transverse contact joint with new PCC paving, refer to Standard Plan P10.
6. At the contractor's option, approach slab transverse reinforcement may be placed parallel to paving notch. Spacing of transverse reinforcement is measured along ℄ roadway.

Remove all polystyrene.

STANDARD DRAWING				
RELEASE DATE 3/14/05	DESIGN	BY M.TRAFFALIS	CHECKED E.THORKILDSEN	RELEASED BY
FILE NO. xs3-120e	DETAILS	BY R.YEE	CHECKED E.THORKILDSEN	OFFICE CHIEF
	SUBMITTED	BY M.HA	DRAWING DATE 4/98	

1 Revised detail
2 Not used

STATE OF CALIFORNIA
DEPARTMENT OF TRANSPORTATION

DIVISION OF ENGINEERING SERVICES

BRIDGE NO. 56-0385
MILE POST 17.43

BROCKTON AVE UC (WIDEN)
STRUCTURE APPROACH TYPE N(30S)

DS OSD 2147A (ENGLISH) (REV. X/XX/XX)

ORIGINAL SCALE IN INCHES FOR REDUCED PLANS 0 1 2 3

CU 08
EA 448400

DISREGARD PRINTS BEARING EARLIER REVISION DATES 7/02/09

REVISION DATES (PRELIMINARY STAGE ONLY)

SHEET 12 OF 18

USERNAME => trlim

560385ssa12.dgn

DATE PLOTTED => 30-APR-2011 TIME PLOTTED => 14:49

DIST.	COUNTY	ROUTE	MILE POST TOTAL PROJECT	SHEET NO.	TOTAL SHEETS
08	Riv	91	15.6/21.6	1763	2028

REGISTERED ENGINEER - CIVIL 11-30-10

4-25-11
PLANS APPROVAL DATE

REGISTERED PROFESSIONAL ENGINEER HUAN VU No. 60696 Exp. 12-31-10 CIVIL STATE OF CALIFORNIA

The State of California or its officers or agents shall not be responsible for the accuracy or completeness of electronic copies of this plan sheet.

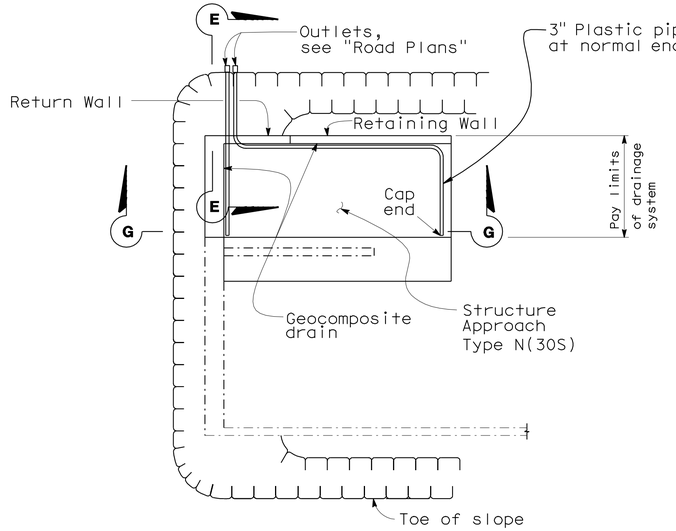

TYPICAL PLAN ①

*For pipe layout at staggered end, see "Detail B".

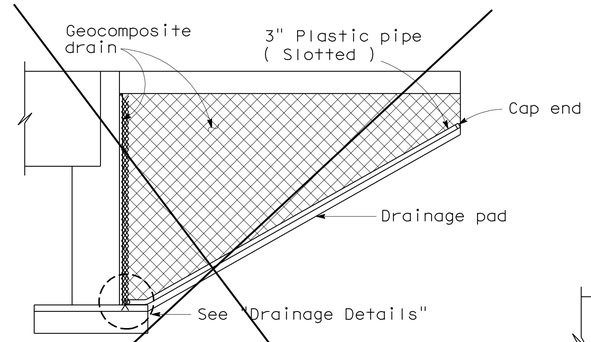

CANTILEVER WINGWALL
SECTION F-F ②
1/4"=1'-0"

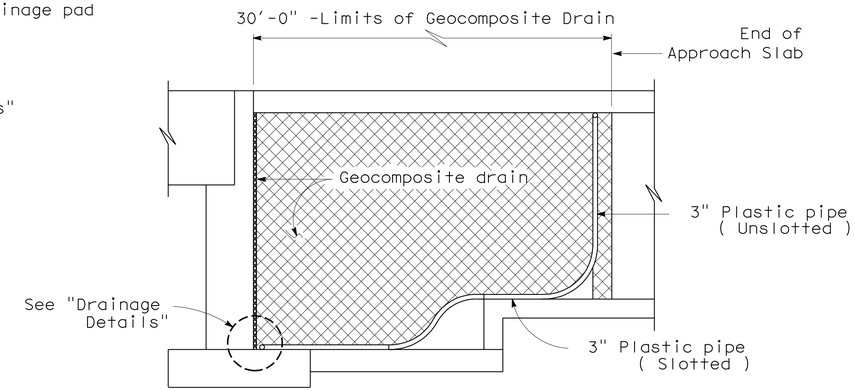

RETAINING WALL WINGWALL
SECTION G-G
No Scale

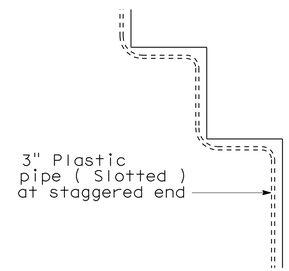

DETAIL B
No Scale

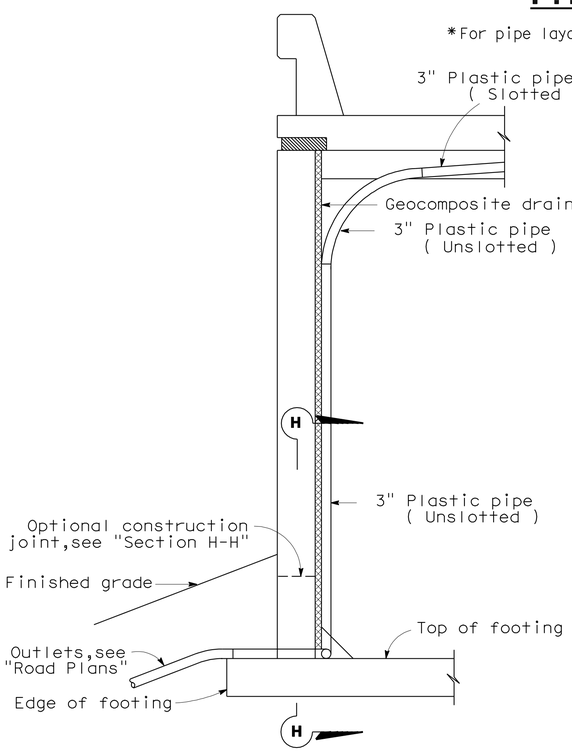

SECTION E-E ①
No Scale

NOTE: Bends and junctions in 3" plastic pipe are 30" radius min.

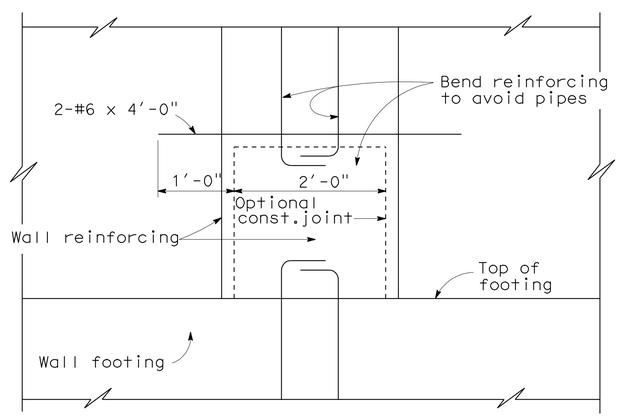

SECTION H-H
No Scale

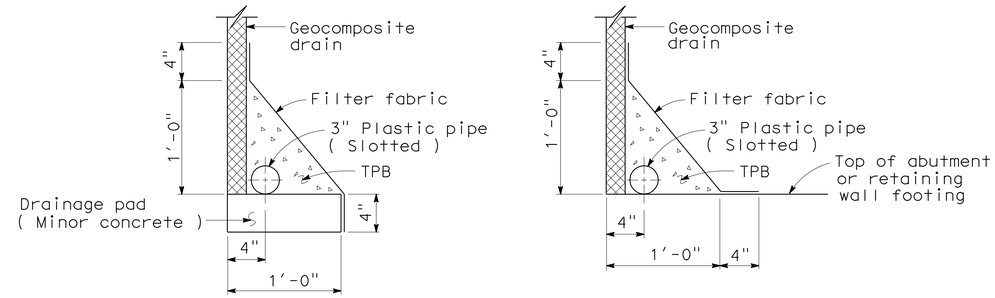

WITHOUT FOOTING **WITH FOOTING**

DRAINAGE DETAILS
1½"=1'-0"

STANDARD DRAWING				
RELEASE DATE 4/23/98	DESIGN	BY M.TRAFFALIS	CHECKED E.THORKILDSEN	RELEASED BY
FILE NO. xs3-110e	DETAILS	BY R.YEE	CHECKED E.THORKILDSEN	
	SUBMITTED	BY M.HA	DRAWING DATE 4/98	OFFICE CHIEF

① Revised detail
② Not used

STATE OF CALIFORNIA DEPARTMENT OF TRANSPORTATION

DIVISION OF ENGINEERING SERVICES

BRIDGE NO. 56-0385
MILE POST 17.43

BROCKTON AVE UC (WIDEN)
STRUCTURE APPROACH DRAINAGE DETAILS

DS OSD 2147A (ENGLISH) (REV. X/XX/XX)

ORIGINAL SCALE IN INCHES FOR REDUCED PLANS 0 1 2 3

CU 08
EA 448400

DISREGARD PRINTS BEARING EARLIER REVISION DATES 7/02/09

REVISION DATES (PRELIMINARY STAGE ONLY)

SHEET 13 OF 18

USERNAME => trlim

560385ssadd13.dgn

DATE PLOTTED => 30-APR-2011 TIME PLOTTED => 14:49

DIST	COUNTY	ROUTE	POST MILES TOTAL PROJECT	SHEET No	TOTAL SHEETS
08	Riv	91	15.6/21.6	1764	2028

REGISTERED CIVIL ENGINEER 7-14-10

4-25-11
PLANS APPROVAL DATE

The State of California or its officers or agents shall not be responsible for the accuracy or completeness of electronic copies of this plan sheet.

REGISTERED PROFESSIONAL ENGINEER Yeo Yoon No. 73532 Exp. 12-31-10 CIVIL STATE OF CALIFORNIA

This LOTB sheet was prepared in accordance with the Caltrans Soil & Rock Logging, Classification, & Presentation Manual (June 2007).

BENCH MARK

SUHV 516 (NOT SHOWN)
Fnd PK/CT WSHR
125.467′ Rt ℄ Rte 91
Sta 238+58.648
N 2288361.400
E 6214724.130
Elev = 864.330′NGVD 29.

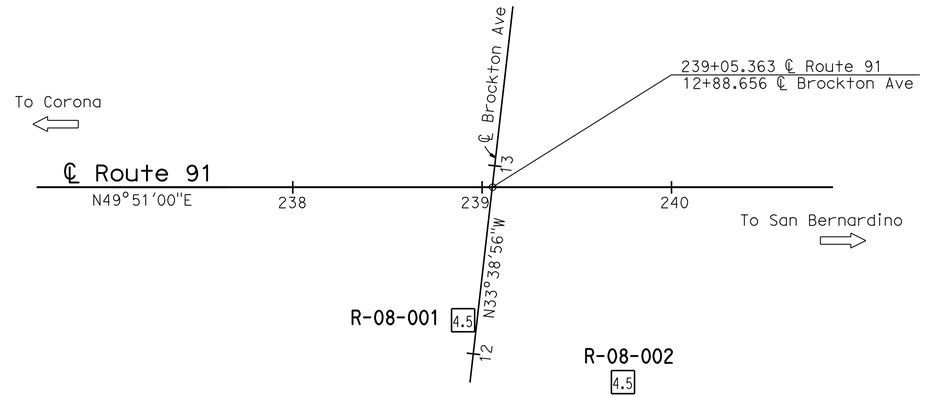

PLAN
1" = 40′

NOTES:

1. Shown are the actual blow counts recorded in the field. Apparent densities of soils shown on the LOTB sheets are based on the corrected SPT N-values for hammer efficiency.
2. A groundwater table measurement was not made at Boring R-08-001 since the bore hole was backfilled immediately after completion of drilling.

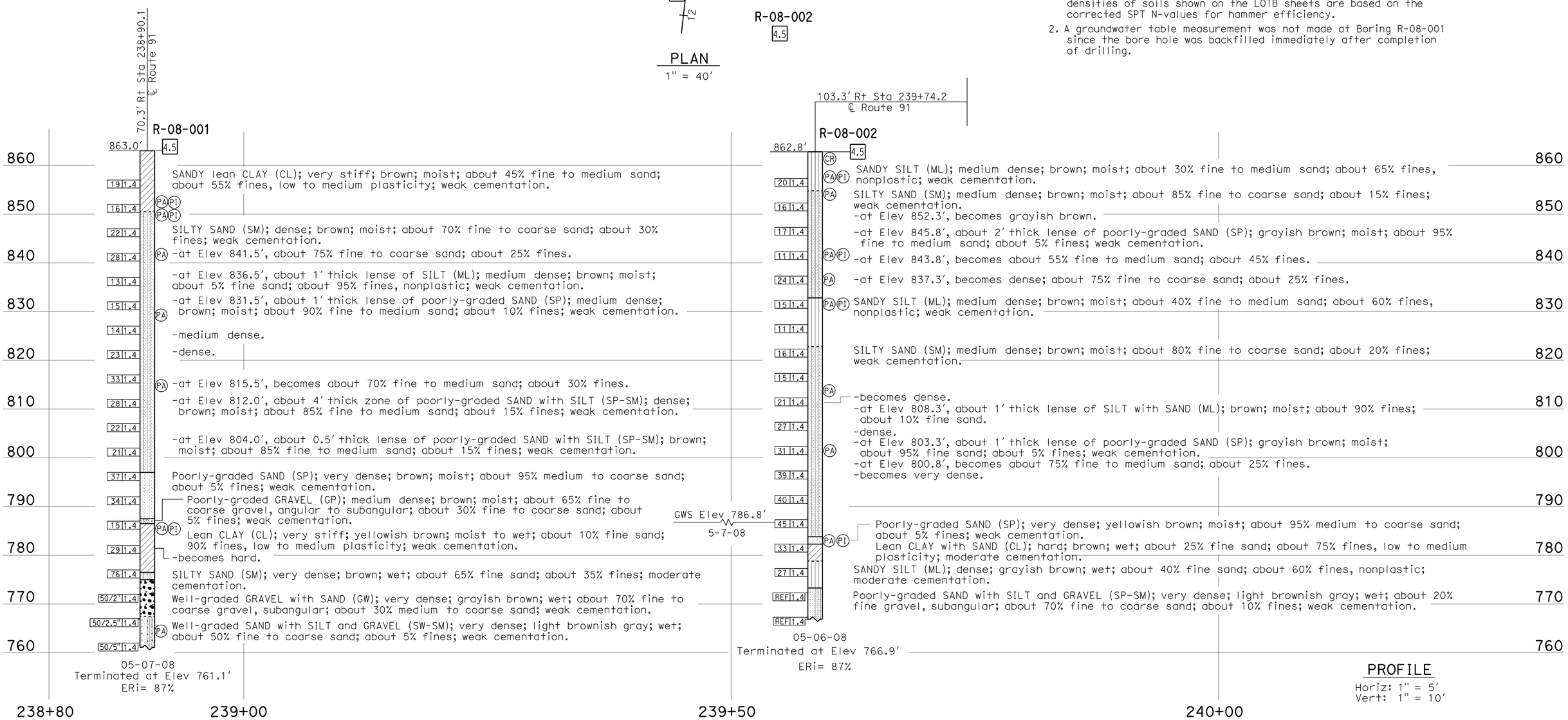

PROFILE
Horiz: 1" = 5′
Vert: 1" = 10′

ENGINEERING SERVICES	GEOTECHNICAL SERVICES	STATE OF CALIFORNIA DEPARTMENT OF TRANSPORTATION	DIVISION OF ENGINEERING SERVICES STRUCTURE DESIGN DESIGN BRANCH 10	BRIDGE NO. 56-0385 POST MILES 17.4	BROCKTON AVE UC (WIDEN) LOG OF TEST BORINGS 1 OF 5
FUNCTIONAL SUPERVISOR NAME: M. DeSalvatore	DRAWN BY: I.G-Remmen, 12/08 CHECKED BY: J. Klamecki	FIELD INVESTIGATION BY: Y. Yoon, C. Manansala			

OGS CIVIL LOG OF TEST BORINGS SHEET

ORIGINAL SCALE IN INCHES FOR REDUCED PLANS 0 1 2 3

CU 08
EA 448401

DISREGARD PRINTS BEARING EARLIER REVISION DATES

REVISION DATES: 01-26-09 03-16-10 04-05-10 05-13-10 06-23-10

SHEET 14 OF 18

FILE => 560385zltb14.dgn

USERNAME => tritim DATE PLOTTED => 30-APR-2011 TIME PLOTTED => 14:49

DIST	COUNTY	ROUTE	POST MILES TOTAL PROJECT	SHEET No	TOTAL SHEETS
08	Riv	91	15.6/21.6	1765	2028

REGISTERED CIVIL ENGINEER 7-14-10

4-25-11
PLANS APPROVAL DATE

REGISTERED PROFESSIONAL ENGINEER Yeo Yoon No. 73532 Exp. 12-31-10 CIVIL STATE OF CALIFORNIA

The State of California or its officers or agents shall not be responsible for the accuracy or completeness of electronic copies of this plan sheet.

REFERENCE: CALTRANS SOIL & ROCK LOGGING, CLASSIFICATION, AND PRESENTATION MANUAL (JUNE 2007)

CEMENTATION

Description	Criteria
Weak	Crumbles or breaks with handling or little finger pressure.
Moderate	Crumbles or breaks with considerable finger pressure.
Strong	Will not crumble or break with finger pressure.

CONSISTENCY OF COHESIVE SOILS

Description	Unconfined Compressive Strength (tsf)	Pocket Penetrometer Measurement (tsf)	Torvane Measurement (tsf)	Field Approximation
Very Soft	< 0.25	< 0.25	< 0.12	Easily penetrated several inches by fist
Soft	0.25 to 0.50	0.25 to 0.50	0.12 to 0.25	Easily penetrated several inches by thumb
Medium Stiff	0.50 to 1.0	0.50 to 1.0	0.25 to 0.50	Penetrated several inches by thumb with moderate effort
Stiff	1 to 2	1 to 2	0.50 to 1.0	Readily indented by thumb but penetrated only with great effort
Very Stiff	2 to 4	2 to 4	1.0 to 2.0	Readily indented by thumbnail
Hard	> 4.0	> 4.0	> 2.0	Indented by thumbnail with difficulty

BOREHOLE IDENTIFICATION

Symbol	Hole Type	Description
Size	A	Auger Boring
Size	R P	Rotary drilled boring Rotary percussion boring (air)
Size	R	Rotary drilled diamond core
Size	HD HA	Hand driven (1-inch soil tube) Hand Auger
●	D	Dynamic Cone Penetration Boring
▲	CPT	Cone Penetration Test (ASTM D 5778-95)
⬚	O	Other

Note: Size in inches.

PLASTICITY OF FINE-GRAINED SOILS

Description	Criteria
Nonplastic	A 1/8-inch thread cannot be rolled at any water content.
Low	The thread can barely be rolled and the lump cannot be formed when drier than the plastic limit.
Medium	The thread is easy to roll and not much time is required to reach the plastic limit. The thread cannot be rerolled after reaching the plastic limit. The lump crumbles when drier than the plastic limit.
High	It takes considerable time rolling and kneading to reach the plastic limit. The thread can be rerolled several times after reaching the plastic limit. The lump can be formed without crumbling when drier than the plastic limit.

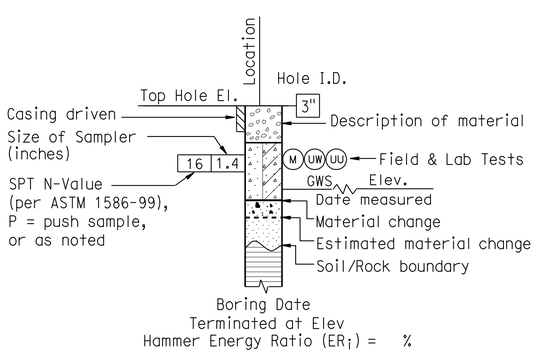

ROTARY BORING

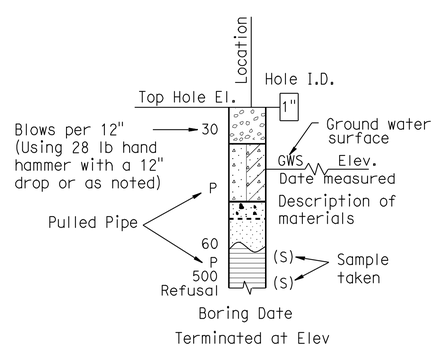

HAND BORING

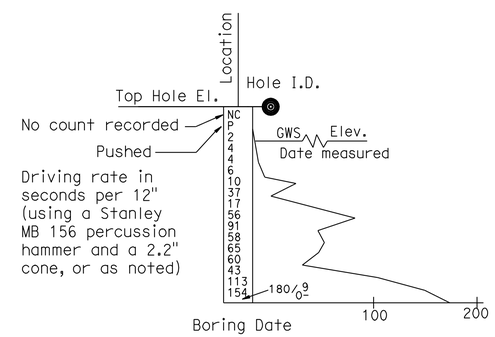

DYNAMIC CONE PENETRATION BORING

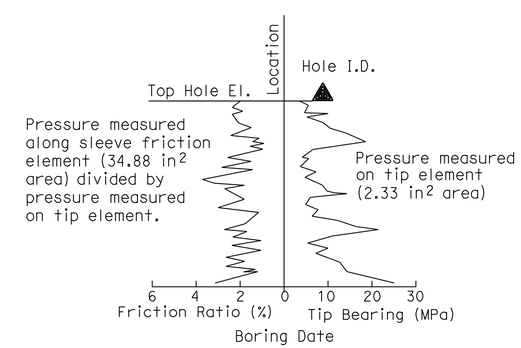

CONE PENETRATION TEST (CPT) SOUNDING

ENGINEERING SERVICES	GEOTECHNICAL SERVICES	STATE OF CALIFORNIA DEPARTMENT OF TRANSPORTATION	DIVISION OF ENGINEERING SERVICES STRUCTURE DESIGN DESIGN BRANCH 10	BRIDGE NO. 56-0385 POST MILE 17.4	BROCKTON AVE UC (WIDEN) LOG OF TEST BORINGS 2 OF 5
	PREPARED BY: F. Nguyen 03/10				

GS LOTB SOIL LEGEND

ORIGINAL SCALE IN INCHES FOR REDUCED PLANS 0 1 2 3

CU 08
EA 448401

DISREGARD PRINTS BEARING EARLIER REVISION DATES 9-21-10

REVISION DATES

SHEET 15 OF 18

FILE => 560385zltb15.dgn

USERNAME => trtim DATE PLOTTED => 30-APR-2011 TIME PLOTTED => 14:49

REFERENCE: CALTRANS SOIL & ROCK LOGGING, CLASSIFICATION, AND PRESENTATION MANUAL (JUNE 2007)

DIST	COUNTY	ROUTE	POST MILES TOTAL PROJECT	SHEET No	TOTAL SHEETS
08	Riv	91	15.6/21.6	1766	2028

REGISTERED CIVIL ENGINEER 7-14-10

4-25-11
PLANS APPROVAL DATE

REGISTERED PROFESSIONAL ENGINEER Yeo Yoon No. 73532 Exp. 12-31-10 CIVIL STATE OF CALIFORNIA

The State of California or its officers or agents shall not be responsible for the accuracy or completeness of electronic copies of this plan sheet.

GROUP SYMBOLS AND NAMES

Graphic/Symbol	Group Names	Graphic/Symbol	Group Names
GW	Well-graded GRAVEL Well-graded GRAVEL with SAND	CL	Lean CLAY Lean CLAY with SAND Lean CLAY with GRAVEL SANDY lean CLAY SANDY lean CLAY with GRAVEL GRAVELLY lean CLAY GRAVELLY lean CLAY with SAND
GP	Poorly graded GRAVEL Poorly graded GRAVEL with SAND		
GW-GM	Well-graded GRAVEL with SILT Well-graded GRAVEL with SILT and SAND	CL-ML	SILTY CLAY SILTY CLAY with SAND SILTY CLAY with GRAVEL SANDY SILTY CLAY SANDY SILTY CLAY with GRAVEL GRAVELLY SILTY CLAY GRAVELLY SILTY CLAY with SAND
GW-GC	Well-graded GRAVEL with CLAY (or SILTY CLAY) Well-graded GRAVEL with CLAY and SAND (or SILTY CLAY and SAND)		
GP-GM	Poorly graded GRAVEL with SILT Poorly graded GRAVEL with SILT and SAND	ML	SILT SILT with SAND SILT with GRAVEL SANDY SILT SANDY SILT with GRAVEL GRAVELLY SILT GRAVELLY SILT with SAND
GP-GC	Poorly graded GRAVEL with CLAY (or SILTY CLAY) Poorly graded GRAVEL with CLAY and SAND (or SILTY CLAY and SAND)		
GM	SILTY GRAVEL SILTY GRAVEL with SAND	OL	ORGANIC lean CLAY ORGANIC lean CLAY with SAND ORGANIC lean CLAY with GRAVEL SANDY ORGANIC lean CLAY SANDY ORGANIC lean CLAY with GRAVEL GRAVELLY ORGANIC lean CLAY GRAVELLY ORGANIC lean CLAY with SAND
GC	CLAYEY GRAVEL CLAYEY GRAVEL with SAND		
GC-GM	SILTY, CLAYEY GRAVEL SILTY, CLAYEY GRAVEL with SAND	OL	ORGANIC SILT ORGANIC SILT with SAND ORGANIC SILT with GRAVEL SANDY ORGANIC SILT SANDY ORGANIC SILT with GRAVEL GRAVELLY ORGANIC SILT GRAVELLY ORGANIC SILT with SAND
SW	Well-graded SAND Well-graded SAND with GRAVEL		
SP	Poorly graded SAND Poorly graded SAND with GRAVEL	CH	Fat CLAY Fat CLAY with SAND Fat CLAY with GRAVEL SANDY fat CLAY SANDY fat CLAY with GRAVEL GRAVELLY fat CLAY GRAVELLY fat CLAY with SAND
SW-SM	Well-graded SAND with SILT Well-graded SAND with SILT and GRAVEL		
SW-SC	Well-graded SAND with CLAY (or SILTY CLAY) Well-graded SAND with CLAY and GRAVEL (or SILTY CLAY and GRAVEL)	MH	Elastic SILT Elastic SILT with SAND Elastic SILT with GRAVEL SANDY elastic SILT SANDY elastic SILT with GRAVEL GRAVELLY elastic SILT GRAVELLY elastic SILT with SAND
SP-SM	Poorly graded SAND with SILT Poorly graded SAND with SILT and GRAVEL		
SP-SC	Poorly graded SAND with CLAY (or SILTY CLAY) Poorly graded SAND with CLAY and GRAVEL (or SILTY CLAY and GRAVEL)	OH	ORGANIC fat CLAY ORGANIC fat CLAY with SAND ORGANIC fat CLAY with GRAVEL SANDY ORGANIC fat CLAY SANDY ORGANIC fat CLAY with GRAVEL GRAVELLY ORGANIC fat CLAY GRAVELLY ORGANIC fat CLAY with SAND
SM	SILTY SAND SILTY SAND with GRAVEL		
SC	CLAYEY SAND CLAYEY SAND with GRAVEL	OH	ORGANIC elastic SILT ORGANIC elastic SILT with SAND ORGANIC elastic SILT with GRAVEL SANDY ORGANIC elastic SILT SANDY ORGANIC elastic SILT with GRAVEL GRAVELLY ORGANIC elastic SILT GRAVELLY ORGANIC elastic SILT with SAND
SC-SM	SILTY, CLAYEY SAND SILTY, CLAYEY SAND with GRAVEL		
PT	PEAT	OL/OH	ORGANIC SOIL ORGANIC SOIL with SAND ORGANIC SOIL with GRAVEL SANDY ORGANIC SOIL SANDY ORGANIC SOIL with GRAVEL GRAVELLY ORGANIC SOIL GRAVELLY ORGANIC SOIL with SAND
	COBBLES COBBLES and BOULDERS BOULDERS		

FIELD AND LABORATORY TESTING

- (C) Consolidation (ASTM D 2435)
- (CL) Collapse Potential (ASTM D 5333)
- (CP) Compaction Curve (CTM 216)
- (CR) Corrosivity Testing (CTM 643, CTM 422, CTM 417)
- (CU) Consolidated Undrained Triaxial (ASTM D 4767)
- (DS) Direct Shear (ASTM D 3080)
- (EI) Expansion Index (ASTM D 4829)
- (M) Moisture Content (ASTM D 2216)
- (OC) Organic Content-% (ASTM D 2974)
- (P) Permeability (CTM 220)
- (PA) Particle Size Analysis (ASTM D 422)
- (PI) Plasticity Index (AASHTO T 90) Liquid Limit (AASHTO T 89)
- (PL) Point Load Index (ASTM D 5731)
- (PM) Pressure Meter
- (PP) Pocket Penetrometer
- (R) R-Value (CTM 301)
- (SE) Sand Equivalent (CTM 217)
- (SG) Specific Gravity (AASHTO T 100)
- (SL) Shrinkage Limit (ASTM D 427)
- (SW) Swell Potential (ASTM D 4546)
- (TV) Pocket Torvane
- (UC) Unconfined Compression-Soil (ASTM D 2166) Unconfined Compression-Rock (ASTM D 2938)
- (UU) Unconsolidated Undrained Triaxial (ASTM D 2850)
- (UW) Unit Weight (ASTM D 4767)
- (VS) Vane Shear (AASHTO T 223)

APPARENT DENSITY OF COHESIONLESS SOILS

Description	SPT N_{60} (Blows / 12 inches)
Very loose	0 - 4
Loose	5 - 10
Medium Dense	11 - 30
Dense	31 - 50
Very Dense	> 50

MOISTURE

Description	Criteria
Dry	Absence of moisture, dusty, dry to the touch
Moist	Damp but no visible water
Wet	Visible free water, usually soil is below water table

PERCENT OR PROPORTION OF SOILS

Description	Criteria
Trace	Particles are present but estimated to be less than 5%
Few	5 to 10%
Little	15 to 25%
Some	30 to 45%
Mostly	50 to 100%

PARTICLE SIZE

Description		Size
Boulder		> 12"
Cobble		3" to 12"
Gravel	Coarse	3/4" to 3"
	Fine	No. 4 to 3/4"
Sand	Coarse	No. 10 to No. 4
	Medium	No. 40 to No. 10
	Fine	No. 200 to No. 40

ENGINEERING SERVICES

GEOTECHNICAL SERVICES
PREPARED BY: F. Nguyen 03/10

STATE OF CALIFORNIA DEPARTMENT OF TRANSPORTATION

DIVISION OF ENGINEERING SERVICES STRUCTURE DESIGN
DESIGN BRANCH 10

BRIDGE NO. 56-0385
POST MILE 17.4

BROCKTON AVE UC (WIDEN)
LOG OF TEST BORINGS 3 OF 5

GS LOTB SOIL LEGEND

ORIGINAL SCALE IN INCHES FOR REDUCED PLANS 0 1 2 3

CU 08
EA 448401

DISREGARD PRINTS BEARING EARLIER REVISION DATES 9-21-10

REVISION DATES

SHEET 16 OF 18

FILE => 560385zltb16.dgn

USERNAME => tr11m DATE PLOTTED => 30-APR-2011 TIME PLOTTED => 14:50

DIST	COUNTY	ROUTE	KILOMETER POST TOTAL PROJECT	SHEET No	TOTAL SHEETS
08	Riv	91	18.0/28.5	330	377

REGISTERED CIVIL ENGINEER

1-22-01
PLANS APPROVAL DATE

REGISTERED PROFESSIONAL ENGINEER ROSS KHIABANI No. 2202 Exp. 6/30/04 CIVIL STATE OF CALIFORNIA

The State of California or its officers or agents shall not be responsible for the accuracy or completeness of electronic copies of this plan.

RIVERSIDE COUNTY TRANSPORTATION COMMISSION
3560 UNIVERSITY AVENUE, SUITE 100
RIVERSIDE, CALIFORNIA 92501

LEIGHTON & ASSOCIATES, INC.
17781 COWAN AVENUE
IRVINE, CA-92614

Caltrans now has a web site! To get to the web site, go to: http://www.dot.ca.gov

Caltrans Metric

PLAN

SCALE 1 : 1000

NO AS BUILT CHANGES

AS BUILT

CORRECTIONS BY Alex Angba

CONTRACT NO. 08-4353U4

DATE 12/17/03

Benchmark:

Elevation 269.367 — Set 2" brass disc in concrete bridge Abutment stamped "California Department of Transportation RIV 91-17.44 LS 5679 1990" flush in bridge Abutment

Elevation 266.709 — Set 2" brass disc in 2" LP with 10" dia. concrete collar stamped "California Department of Transportation RIV 91-17.50 LS 5679 1990" flush

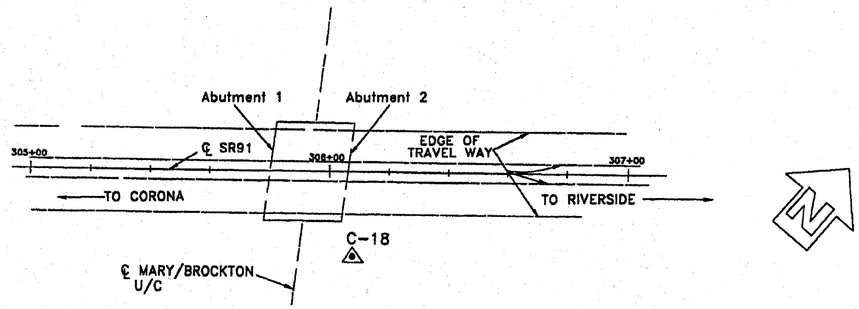

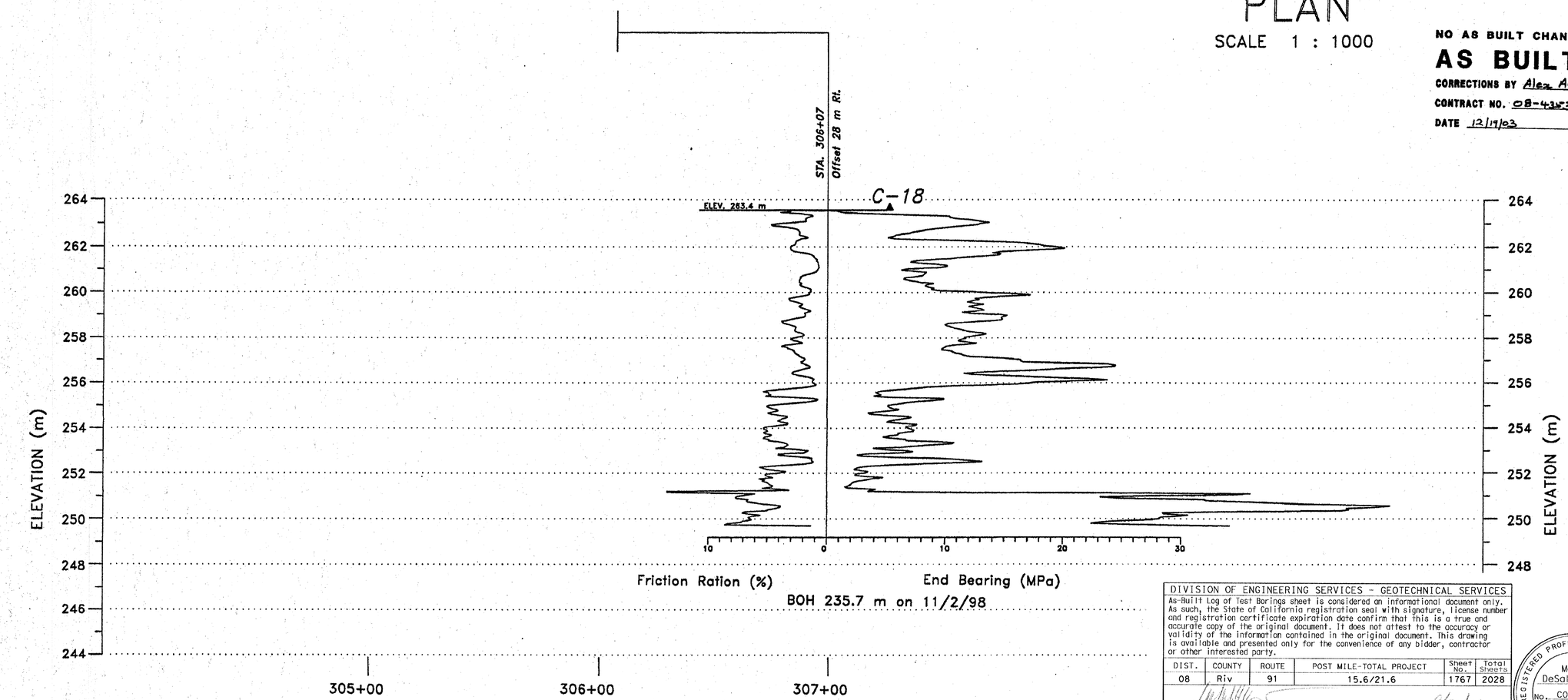

HORIZONTAL SCALE 1 : 1000
VERTICAL SCALE 1 : 100

DIVISION OF ENGINEERING SERVICES - GEOTECHNICAL SERVICES

As-Built Log of Test Borings sheet is considered an informational document only. As such, the State of California registration seal with signature, license number and registration certificate expiration date confirm that this is a true and accurate copy of the original document. It does not attest to the accuracy or validity of the information contained in the original document. This drawing is available and presented only for the convenience of any bidder, contractor or other interested party.

DIST.	COUNTY	ROUTE	POST MILE-TOTAL PROJECT	Sheet No.	Total Sheets
08	Riv	91	15.6/21.6	1767	2028

REGISTERED CIVIL ENGINEER — DATE 9/22/10

REGISTERED PROFESSIONAL ENGINEER Mark DeSalvatore No. C039499 Exp. 12-31-11 CIVIL STATE OF CALIFORNIA

SUPPLEMENTAL SHEET

BROCKTON AVE UC (WIDEN)

LOG OF TEST BORINGS 1 OF 2

NOTE: A COPY OF THIS LOG OF TEST BORINGS IS AVAILABLE AT OFFICE OF STRUCTURE MAINTENANCE AND INVESTIGATIONS, SACRAMENTO, CALIFORNIA

CU: 08
EA: 448401

BRIDGE No. 56-0385

Sheet 17 of 18

TO ACCOMPANY PLANS DATED 4-25-11

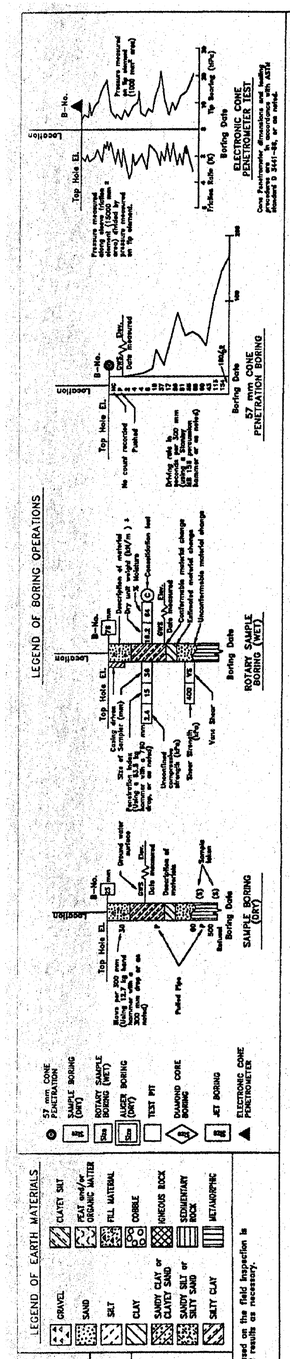

DESIGN OVERSIGHT — SIGN OFF DATE Oct. 6, 2000

DRAWN BY Karen Perez

CHECKED BY Ross Khiabani

JDH/ENG FIELD INVESTIGATOR

DATE

PREPARED FOR THE STATE OF CALIFORNIA DEPARTMENT OF TRANSPORTATION

Jeffrey G. Chapman
PROJECT ENGINEER

BRIDGE NO. 56-0385
POST MILE 28.1

BROCKTON STREET UC
LOG OF TEST BORINGS

OSF CIVIL LOG OF TEST BORING SHEET (METRIC) (REV. 4/20/00) Modified for on geotechnical consultants

ORIGINAL SCALE IN INCHES FOR REDUCED PLANS 0 1 2 3

CU 08110
EA 4353U1

DISREGARD PRINTS BEARING EARLIER REVISION DATES

REVISION DATES (PRELIMINARY STAGE ONLY)

SHEET 15 OF 15

560385zltb17.tif

FED. ROAD DIV. NO.	STATE	PROJ. NO.	FISCAL YEAR	SHEET NO.	TOTAL SHEETS
7	CAL.	U-0269	(3)	185	187

DIST.	COUNTY	ROUTE	SECTION	SHEET No.	TOTAL Sheets
VIII	RIV	43	RIV	13	15

DATE SUBMITTED May 13, 1957

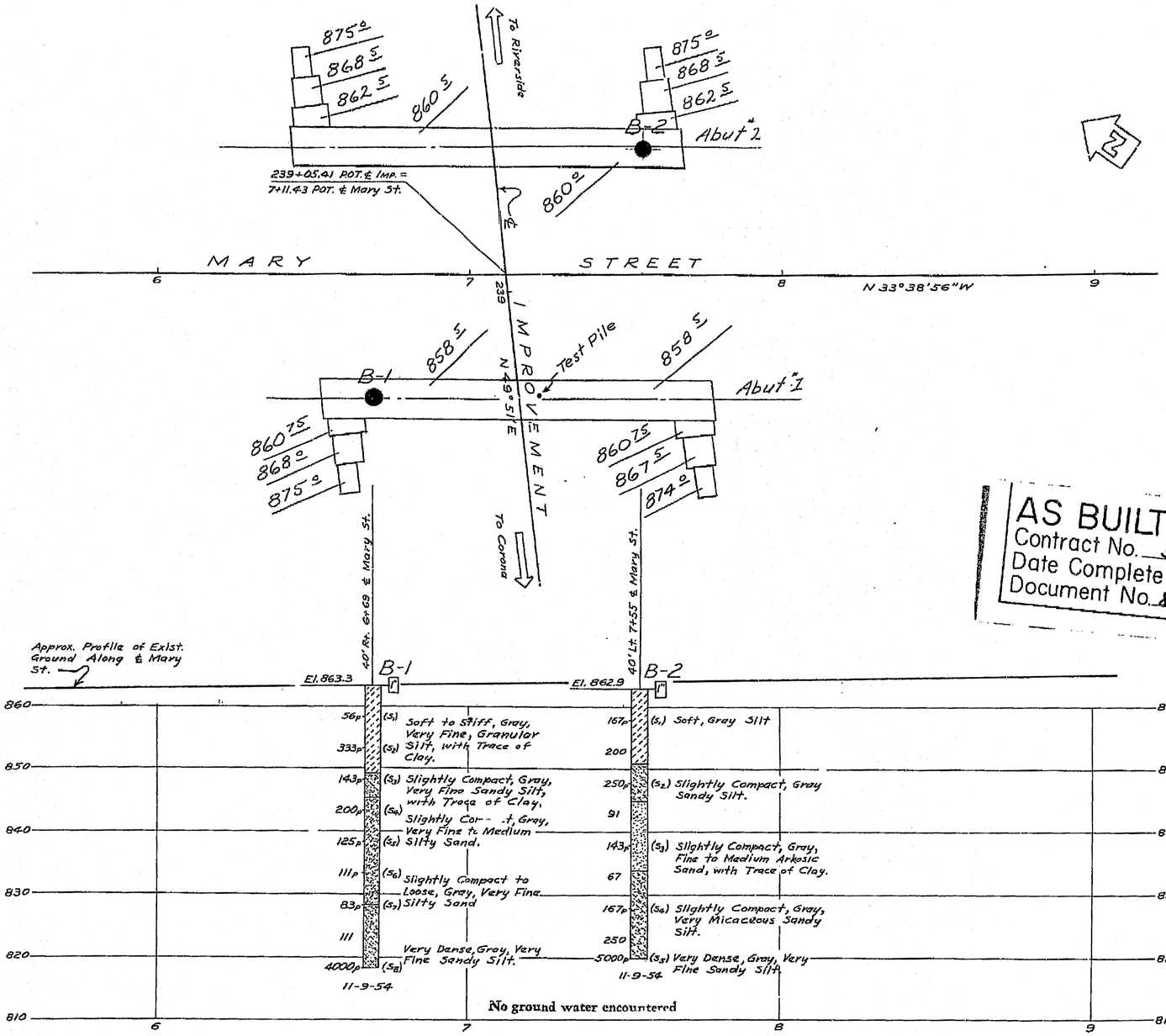

CONSTRUCTION NOTES

1. Elevs. shown at ftgs. are "As Built" ftg. subgrades, & are same as on plans.
2. Logged drillings did not vary significantly from Borings.
3. No ground water encountered.
4. Pile Tip Elevs.
   "As Built" - 820 e
   Plan - 815 e

Design Pile Loading - 45 Tons.
Type Pile - Cast-in-Drilled-Hole Concrete Pile Alt. "V"
Diameter - Tip & Butt 15 1/2"
Total No. of Piles - 156
Lineal Feet of Piles
"As Built" - 6653 e
Plan - 7430 e

AS BUILT PLANS
Contract No. 58-8VC8
Date Completed
Document No. 80000703

Test Boring By Bridge Dept.

B.M. Ind.-Mary '53
Sp. Hd. Nail in Lead in P.C.C. Curb 232' Rt. Sta. 239+00 ℄ Imp.
El. 865.36

DIVISION OF ENGINEERING SERVICES - GEOTECHNICAL SERVICES

As-Built Log of Test Borings sheet is considered an informational document only. As such, the State of California registration seal with signature, license number and registration certificate expiration date confirm that this is a true and accurate copy of the original document. It does not attest to the accuracy or validity of the information contained in the original document. This drawing is available and presented only for the convenience of any bidder, contractor or other interested party.

DIST.	COUNTY	ROUTE	POST MILE-TOTAL PROJECT	Sheet No.	Total Sheets
08	Riv	91	15.6/21.6	1768	2028

REGISTERED CIVIL ENGINEER — DATE 9/22/10

REGISTERED PROFESSIONAL ENGINEER Mark DeSalvatore No. C039499 Exp. 12-31-11 CIVIL STATE OF CALIFORNIA

SUPPLEMENTAL SHEET

BROCKTON AVE UC (WIDEN)

LOG OF TEST BORINGS 2 OF 2

NOTE: A COPY OF THIS LOG OF TEST BORINGS IS AVAILABLE AT OFFICE OF STRUCTURE MAINTENANCE AND INVESTIGATIONS, SACRAMENTO, CALIFORNIA

CU: 08
EA: 448401

BRIDGE No. 56-0385

Sheet 18 of 18

TO ACCOMPANY PLANS DATED 4-25-11

CLASSIFICATION OF MATERIAL BASED ON STANDARD GRADE SIZE LIMITS

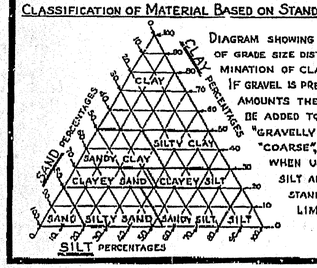

DIAGRAM SHOWING THE BASIS FOR ESTIMATES OF GRADE SIZE DISTRIBUTION USED IN DETERMINATION OF CLASS NAMES.

IF GRAVEL IS PRESENT IN APPRECIABLE AMOUNTS THE TERM "GRAVELLY" MAY BE ADDED TO THE CLASS NAME, VIZ. "GRAVELLY SAND." THE TERMS "COARSE", "MEDIUM" AND "FINE" WHEN USED TO DESCRIBE SAND, SILT AND GRAVEL REFER TO STANDARD GRADE SIZE LIMITS.

LEGEND OF EARTH MATERIALS

- GRAVEL
- SAND
- SILT
- CLAY
- SANDY CLAY OR CLAYEY SAND
- SANDY SILT OR SILTY SAND
- SILTY CLAY OR CLAYEY SILT
- PEAT AND/OR ORGANIC MATTER
- FILL MATERIAL
- IGNEOUS ROCK
- SEDIMENTARY ROCK
- METAMORPHIC ROCK

LEGEND OF BORING OPERATIONS

- PLAN OF ANY BORING
- PENETROMETER
- 2¼" CONE PENETROMETER
- SAMPLER BORING (DRY)
- ROTARY BORING (WET)
- AUGER BORING (DRY)
- JET BORING
- CORE BORING
- TEST PIT

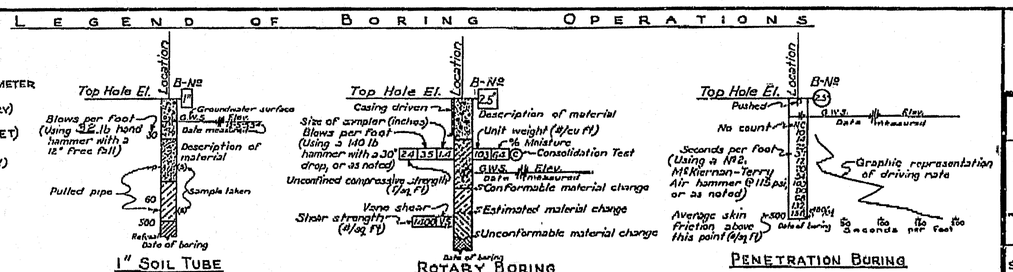

NOTES

The contractor's attention is directed to Section 2, Article (c) of the Standard Specifications and to the Special Provisions accompanying this set of plans.

Classification of earth material as shown on this sheet is based upon field inspection and is not to be construed to imply mechanical analysis.

STATE OF CALIFORNIA
DEPARTMENT OF PUBLIC WORKS
DIVISION OF HIGHWAYS

MARY STREET UNDERCROSSING

LOG OF TEST BORINGS

SCALE Hor. 1" = 20' Vert. 1" = 10' | BRIDGE 56-385 | FILE E-54 | DRAWING C-4173-14

REL. DRAWING NO. F-4173 | 15 | 22

BRIDGE DEPARTMENT

560385zltb18.tif

DIST	COUNTY	ROUTE	POST MILES TOTAL PROJECT	SHEET No	TOTAL SHEETS
08	Riv	91	15.6/21.6	1769	2028

REGISTERED CIVIL ENGINEER 11-30-10 DATE

4-25-11
PLANS APPROVAL DATE

REGISTERED PROFESSIONAL ENGINEER HUAN VU No. 60696 Exp. 12-31-10 CIVIL STATE OF CALIFORNIA

The State of California or its officers or agents shall not be responsible for the accuracy or completeness of electronic copies of this plan sheet.

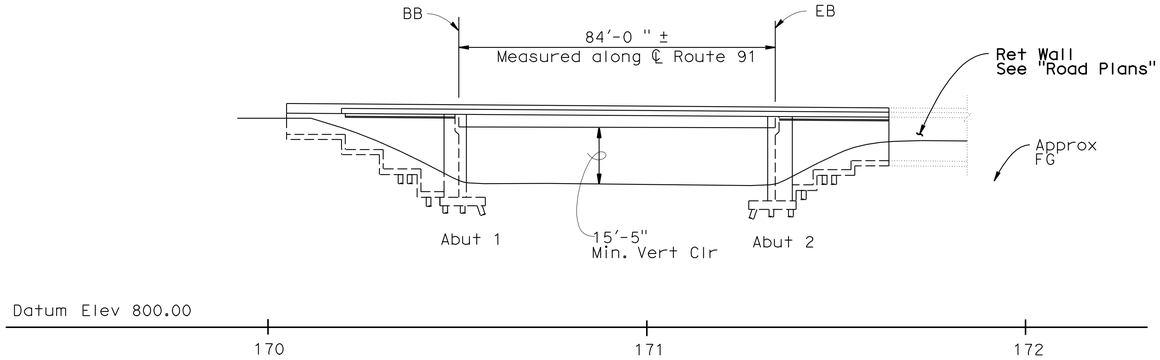

ELEVATION

1" = 20'

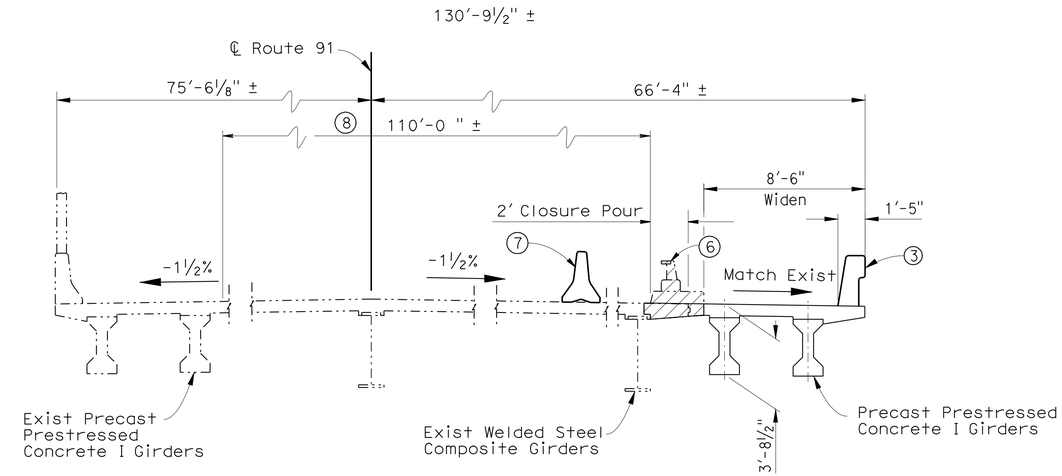

TYPICAL SECTION

¼" = 1'-0"

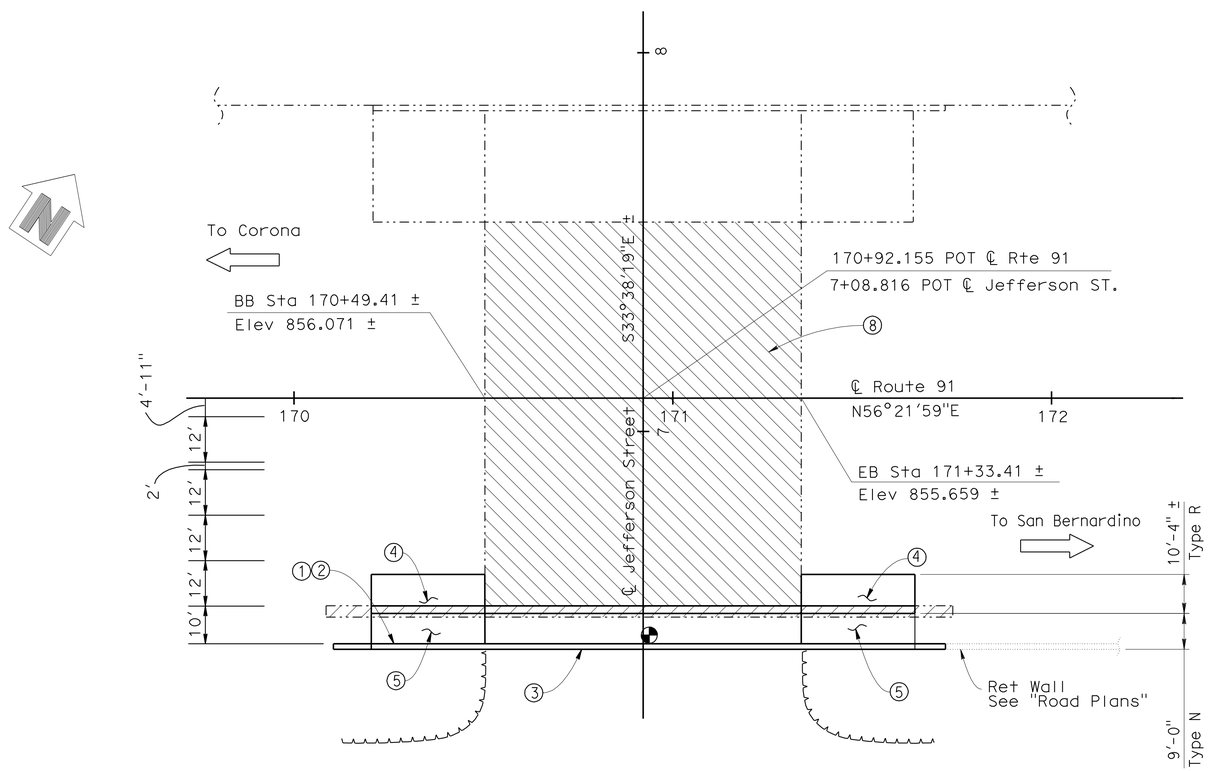

PLAN

1" = 20'

NOTES:

① Paint "Br. No 56-0387"
② Paint "JEFFERSON STREET UC"
③ Concrete Barrier Type 732
④ Structure Approach Type R(30S)
⑤ Structure Approach Type N(30S)
⑥ Remove exist Overhang, Curb (Type F) & Railing (Type 9)
⑦ Temporary Railing (Type K), See "Road Plans"
⑧ Clean and Treat Bridge Deck, Prior to bridge deck treatment, remove unsound concrete and patch with rapid setting concrete

LEGEND:

Indicates New Construction
Indicates Existing Structure
Indicates Limits of Bridgr Removal (Portion)
Indicates Limits of Clean and Treat Bridge Deck
Indicates point of minimum vertical clearance

NOTE:
THE CONTRACTOR SHALL VERIFY ALL CONTROLLING FIELD DIMENSIONS BEFORE ORDERING OR FABRICATING ANY MATERIAL.

For "Index to Plans", "General Notes", "Standard Plans", "Pile Data" and "Quantities", see "INDEX TO PLANS" sheet.

DANIEL T. ADAMS
DESIGN ENGINEER

	BY	CHECKED			
DESIGN	H. Vu	D.Azzam	LOAD & RESISTANCE FACTOR DESIGN	LIVE LOADING: HL-93 W/"LOW-BOY"; PERMIT DESIGN VEHICLE	
DETAILS	Y. Tang	D.Azzam	LAYOUT	H. Vu	D. Azzam
QUANTITIES	T. Sanderson	R. Anderson	SPECIFICATIONS	Dave Klein	PLANS AND SPECS COMPARED Dave Klein

ORIGINAL SCALE IN INCHES FOR REDUCED PLANS 0 1 2 3

STATE OF CALIFORNIA
DEPARTMENT OF TRANSPORTATION

DIVISION OF ENGINEERING SERVICES
STRUCTURE DESIGN
DESIGN BRANCH 10

CU 08
EA 448401

BRIDGE NO. 56-0387
POST MILE 16.14

JEFFERSON STREET UC (WIDEN)
GENERAL PLAN

DISREGARD PRINTS BEARING EARLIER REVISION DATES

REVISION DATES: 4-25-08 6-23-08 10-02-08 4/28/09 6/19/09 6-25-10 9-21-10

SHEET 1 OF 16

STRUCTURES DESIGN GENERAL PLAN SHEET (ENGLISH) (REV.07-24-06)

FILE => 560387agp01.dgn

USERNAME => trmartin DATE PLOTTED => 30-APR-2011 TIME PLOTTED => 13:33

DIST	COUNTY	ROUTE	POST MILES TOTAL PROJECT	SHEET No	TOTAL SHEETS
08	Riv	91	15.6/21.6	1770	2028

REGISTERED CIVIL ENGINEER 11-30-10 DATE

4-25-11
PLANS APPROVAL DATE

REGISTERED PROFESSIONAL ENGINEER HUAN VU No. 60696 Exp. 12-31-10 CIVIL STATE OF CALIFORNIA

The State of California or its officers or agents shall not be responsible for the accuracy or completeness of electronic copies of this plan sheet.

INDEX TO PLANS

SHEET NO.	TITLE
1	GENERAL PLAN
2	INDEX TO PLANS
3	FOUNDATION PLAN
4	ABUTMENT LAYOUT
5	ABUTMENT DETAILS No. 1
6	ABUTMENT DETAILS No. 2
7	TYPICAL SECTION
8	GIRDER LAYOUT
9	PRECAST PRESTRESSED I GIRDER (LRFD)
10	STRUCTURE APPROACH TYPE N(30S)
11	STRUCTURE APPROACH TYPE R(30S)
12	STRUCTURE APPROACH DRAINAGE DETAILS
13	MISCELLANEOUS DETAILS
14	LOG OF TEST BORINGS 1 OF 3
15	LOG OF TEST BORINGS 2 OF 3
16	LOG OF TEST BORINGS 3 OF 3

STANDARD PLANS DATED MAY 2006

A10A	ACRONYMS AND ABBREVIATIONS (SHEET 1 OF 2)
A10B	ACRONYMS AND ABBREVIATIONS (SHEET 2 OF 2)
A10C	SYMBOLS (SHEET 1 OF 2)
A10D	SYMBOLS (SHEET 2 OF 2)
A62B	LIMITS OF PAYMENT FOR EXCAVATION AND BACKFILL - BRIDGE SURCHARGE AND WALL
A62C	LIMITS OF PAYMENT FOR EXCAVATION AND BACKFILL - BRIDGE
BO-1	BRIDGE DETAILS
BO-3	BRIDGE DETAILS
BO-5	BRIDGE DETAILS
BO-13	BRIDGE DETAILS
B2-5	PILE DETAILS CLASS 90 AND CLASS 140
B3-1	RETAINING WALL TYPE 1 H=4′ THROUGH 30′
B3-8	RETAINING WALL DETAILS No. 1
RSP B6-21	JOINT SEALS (MAXIMUM MOVEMENT RATING = 2")
B11-55	CONCRETE BARRIER TYPE 732

STANDARD PLAN SHEET NO.

DETAIL NO.

PILE DATA TABLE

Location	Pile Type	Nominal Resistance (kips)		Design Tip Elevation (ft)	Specified Tip Elevation (ft)	Nominal Driving Resistance Required (kips)
		Compression	Tension			
Abut 1	Class 140 Alt. V	260	0	776.0 (a)	776.0	260
Abut 2	Class 140 Alt. V	260	0	774.0 (a)	774.0	260
Abut 1 Wingwall	Class 90 Alt. V	180	0	790.0 (a)	790.0	180
Abut 2 Wingwall	Class 90 Alt. V	180	0	787.0 (a)	787.0	180

Notes:

1. Design Tip Elev is controlled by (a) Compression

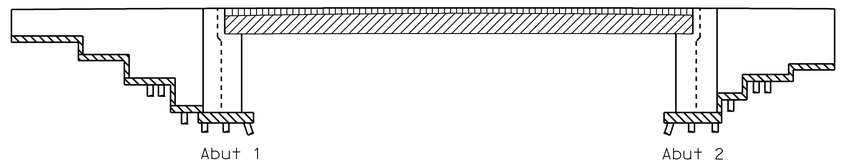

Structural Concrete, Bridge (4000 psi @ 28 days)

Structural Concrete, Bridge

Structural Concrete, Bridge Footing

Precast Prestressed Concrete I Girders

CONCRETE STRENGTH AND TYPE LIMITS

No Scale

QUANTITIES

REMOVE UNSOUND CONCRETE	2	CF
CLEAN BRIDGE DECK	9,072	SQFT
BRIDGE REMOVAL (PORTION), LOCATION A	LUMP	SUM
STRUCTURE EXCAVATION (BRIDGE)	229	CY
STRUCTURE BACKFILL (BRIDGE)	312	CY
AGGREGATE BASE (APPROACH SLAB)	2	CY
FURNISH PILING (CLASS 90) (ALTERNATIVE V)	386	LF
DRIVE PILE (CLASS 90) (ALTERNATIVE V)	8	EA
FURNISH PILING (CLASS 140) (ALTERNATIVE V)	554	LF
DRIVE PILE (CLASS 140) (ALTERNATIVE V)	10	EA
STRUCTURAL CONCRETE, BRIDGE FOOTING	52	CY
STRUCTURAL CONCRETE, BRIDGE	100	CY
STRUCTURAL CONCRETE, APPROACH SLAB (TYPE N)	19	CY
STRUCTURAL CONCRETE, APPROACH SLAB (TYPE R)	23	CY
ARCHITECTURAL SURFACE(TEXTURED CONCRETE) FRACTURED RIB TEXTURE	800	SQFT
DRILL AND BOND DOWEL	119	LF
RAPID SETTING CONCRETE (PATCH)	2	CF
FURNISH PRECAST PRESTRESSED CONCRETE GIRDER (80′-90′)	2	EA
ERECT PRECAST PRESTRESSED CONCRETE GIRDER	2	EA
JOINT SEAL (MR 1")	37	LF
BAR REINFORCING STEEL (BRIDGE)	31,007	LB
TREAT BRIDGE DECK	9,072	SQFT
PUBLIC SAFETY PLAN	LUMP	SUM
FURNISH BRIDGE DECK TREATMENT MATERIAL	91	GAL
CONCRETE BARRIER (TYPE 732)	158	LF

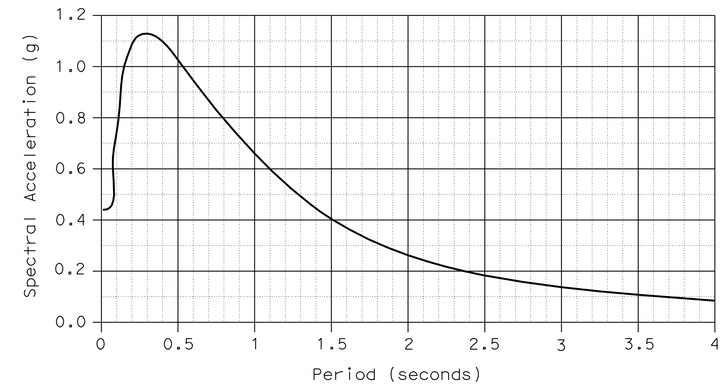

HORIZONTAL ARS CURVE

GENERAL NOTES
LOAD AND RESISTANCE FACTOR DESIGN

DESIGN: AASHTO LRFD BRIDGE DESIGN SPECIFICATIONS, 3rd Edition with 2006 Interims and CALTRANS Amendments, V3.06.01.

SEISMIC DESIGN: Caltrans Seismic Design Criteria (SDC) Version 1.4, July, 2006.

DEAD LOAD: Includes 35 Psf for future wearing surface.

LIVE LOADING: HL93 with alternative and permit design load.

SEISMIC LOADING: CALTRANS SDC ARS Curve for Soil Profile Type D (M = 7.5±0.25), (Peak Rock Acceleration = 0.4g).

REINFORCED CONCRETE: f_y = 60 ksi

f'_c = 3600 psi, unless otherwise noted

n = 8

Transverse Deck Slabs (Working Stress Design)

f_s = 60 ksi

f'_c = 3600 psi, unless otherwise noted

n = 10

PRESTRESSED CONCRETE: See "PRESTRESSING NOTES" on PRECAST PRESTRESSED I GIRDER (LRFD) sheet.

	BY	CHECKED
DESIGN	D. Azzam	H. Vu
DETAILS	R. Kirkland	H. Vu
QUANTITIES	T. Sanderson	R. Anderson

STATE OF CALIFORNIA
DEPARTMENT OF TRANSPORTATION

DIVISION OF ENGINEERING SERVICES
STRUCTURE DESIGN
DESIGN BRANCH 10

BRIDGE NO. 56-0387
POST MILE 16.14

JEFFERSON STREET UC (WIDEN)
INDEX TO PLANS

STRUCTURES DESIGN DETAIL SHEET (ENGLISH) (REV. 10/25/05)

ORIGINAL SCALE IN INCHES FOR REDUCED PLANS 0 1 2 3

CU 08
EA 448401

DISREGARD PRINTS BEARING EARLIER REVISION DATES

REVISION DATES: 2-18-10 6-25-10 9-30-10

SHEET 2 OF 16

FILE => 560387aitp02.dgn

USERNAME => trmartin DATE PLOTTED => 30-APR-2011 TIME PLOTTED => 13:33

DIST	COUNTY	ROUTE	POST MILES TOTAL PROJECT	SHEET No	TOTAL SHEETS
08	Riv	91	15.6/21.6	1771	2028

REGISTERED CIVIL ENGINEER 11-30-10 DATE

4-25-11
PLANS APPROVAL DATE

REGISTERED PROFESSIONAL ENGINEER HUAN VU No. 60696 Exp. 12-31-10 CIVIL STATE OF CALIFORNIA

The State of California or its officers or agents shall not be responsible for the accuracy or completeness of electronic copies of this plan sheet.

BRIDGE LOCATION
① - 54.915 Rt. ℄, Sta.170+50.190, Elev.=855.436 ±
② - 54.923 Rt. ℄, Sta.171+34.100, Elev.=854.887 ±

Ⓐ STA 7+08.816 JEFFERSON ST. =
STA 170+92.155 ℄ RTE 91

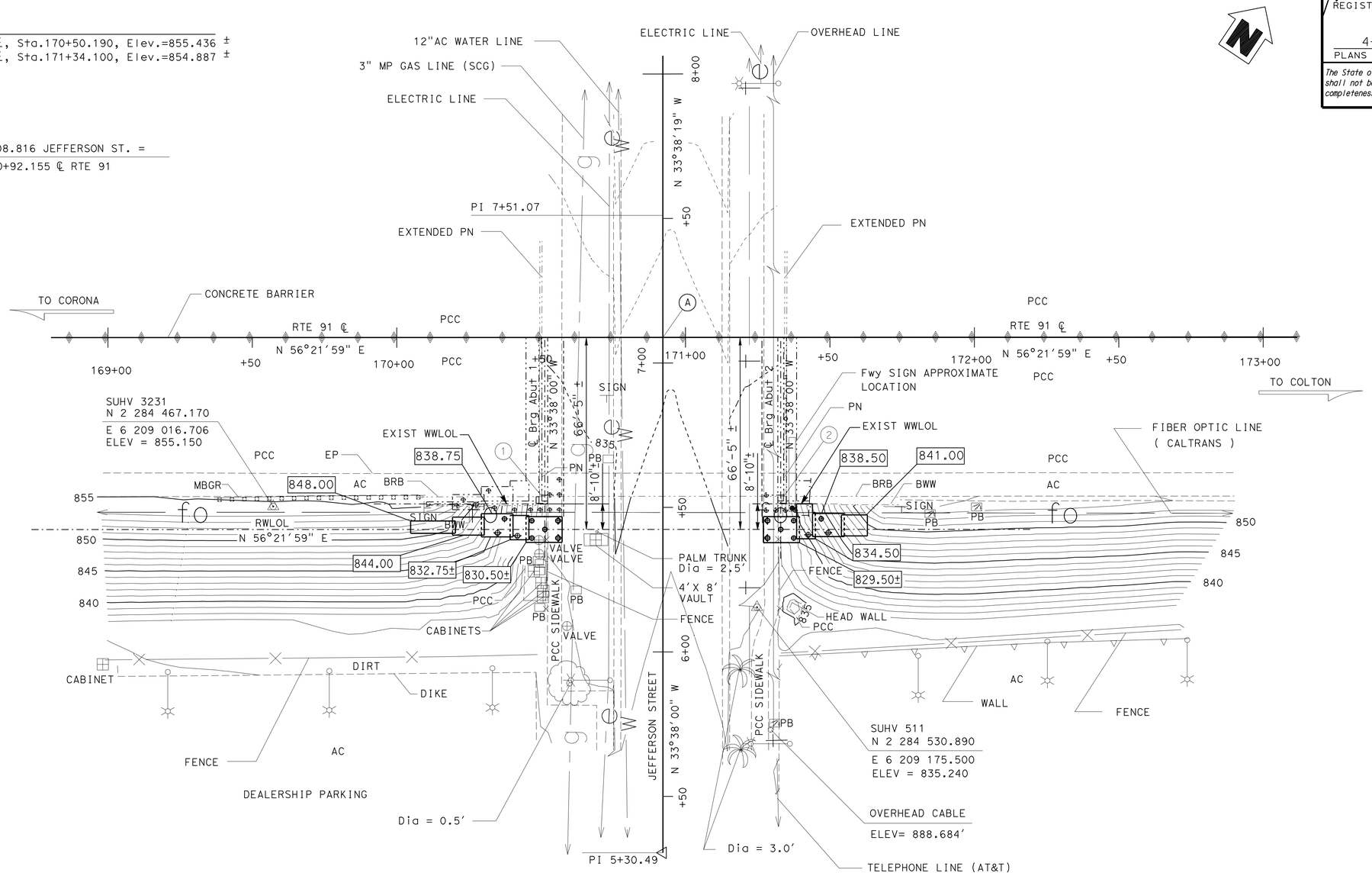

SURVEY CONTROL

SUHV 511
Fnd 1" IP/CAP
93.345' Rt. ℄ Rte 91
Sta. 171+24.720
N 2 284 530.890
E 6 209 175.500
Elev. = 835.240

SUHV 3231
Fnd BRASS DISK STAMED"RIV9"
58.445'Rt. ℄ Rte 91
Sta. 169+57.220
N 2 284 467.170
E 6 209 016.706
Elev. = 855.149

NOTES:

Underground utilities as shown are approximate

Indicates Bottom of footing elevation

PRELIMINARY INVESTIGATION SECTION							
SCALE 1:20	VERT.DATUM NAVD 88	PHOTOGRAMMETRY AS OF: X					
	HORZ.DATUM NAD 83 (1991.35)	SURVEYED	BY T.PHONG / C.STEWART	CHECKED	BY L.MANABO 05/2008		
ALIGNMENT TIES X		DRAFTED	BY S.ABASSY 05/2008	CHECKED	BY L.MANABO 05/2008		

DESIGN	BY D. Azzam	CHECKED H. Vu
DETAILS	BY R. Kirkland	CHECKED H. Vu
QUANTITIES	BY T. Sanderson	CHECKED R. Anderson

STATE OF CALIFORNIA
DEPARTMENT OF TRANSPORTATION

DIVISION OF ENGINEERING SERVICES
STRUCTURE DESIGN
DESIGN BRANCH 10

BRIDGE NO. 56-0387
POST MILE 16.14

JEFFERSON STREET UC (WIDEN)
FOUNDATION PLAN

STRUCTURES FOUNDATION PLAN SHEET (ENGLISH) (REV. 10/25/05)

ORIGINAL SCALE IN INCHES FOR REDUCED PLANS 0 1 2 3

CU 08
EA 448401

DISREGARD PRINTS BEARING EARLIER REVISION DATES

REVISION DATES 05/29/08 07/08/09

SHEET 3 OF 16

FILE => 560387efdplo3.dgn

USERNAME => rtmcrtin DATE PLOTTED => 30-APR-2011 TIME PLOTTED => 13:33

DIST	COUNTY	ROUTE	POST MILES TOTAL PROJECT	SHEET No	TOTAL SHEETS
08	Riv	91	15.6/21.6	1772	2028

REGISTERED CIVIL ENGINEER 11-30-10 DATE

4-25-11
PLANS APPROVAL DATE

The State of California or its officers or agents shall not be responsible for the accuracy or completeness of electronic copies of this plan sheet.

REGISTERED PROFESSIONAL ENGINEER HUAN VU No. 60696 Exp. 12-31-10 CIVIL STATE OF CALIFORNIA

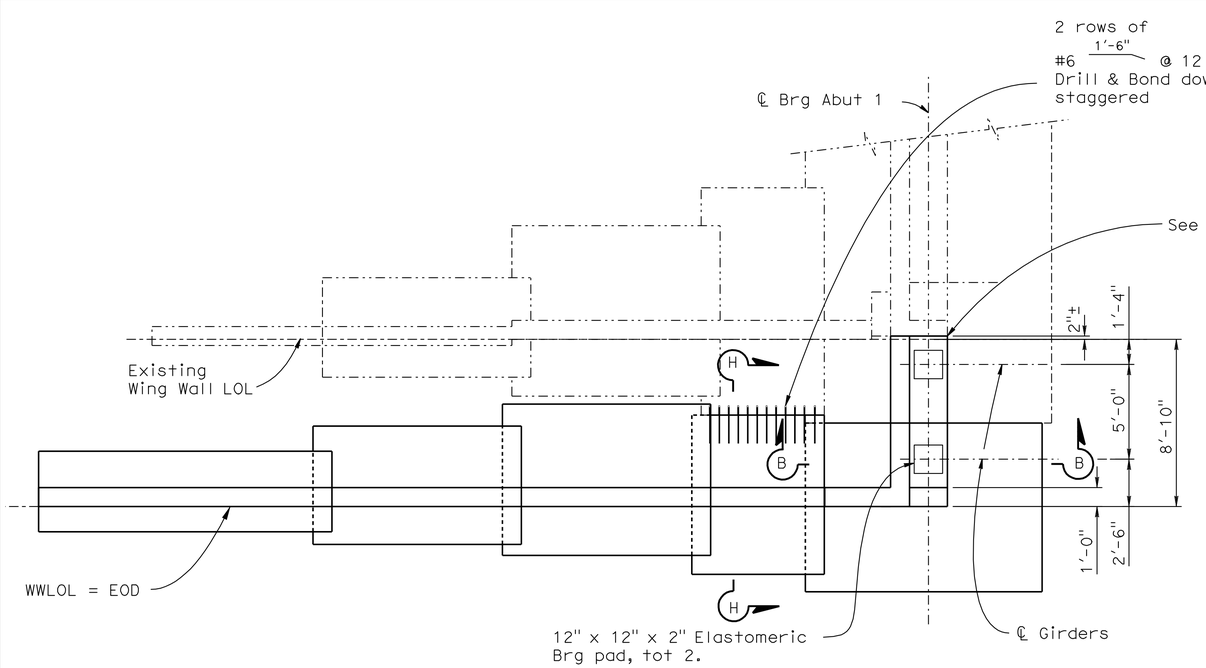

PLAN ABUTMENT NO. 1

1/4" = 1'-0"

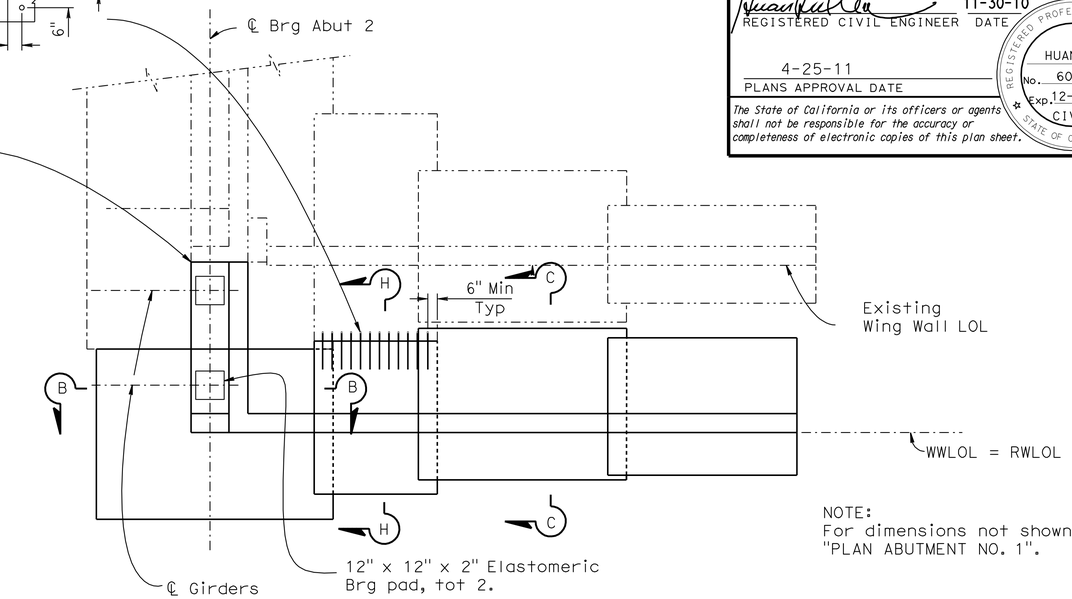

PLAN ABUTMENT NO. 2

1/4" = 1'-0"

NOTE:
For dimensions not shown, see "PLAN ABUTMENT NO. 1".

NOTES:

1. Existing front face of Abutment and new front face of Abutment should be matched on same line.
2. For "SECTION B-B" see "ABUTMENT DETAILS NO. 1" sheet.
3. For removal of existing structure see "BRIDGE REMOVAL" sheet.
4. For Pile layout see "ABUTMENT DETAILS NO. 1" sheet.
5. For "SECTION C-C", "SECTION E-E", and "SECTION H-H", see "ABUTMENT DETAILS NO. 2" sheet.

LEGEND:

Indicates existing structure

Indicates new construction

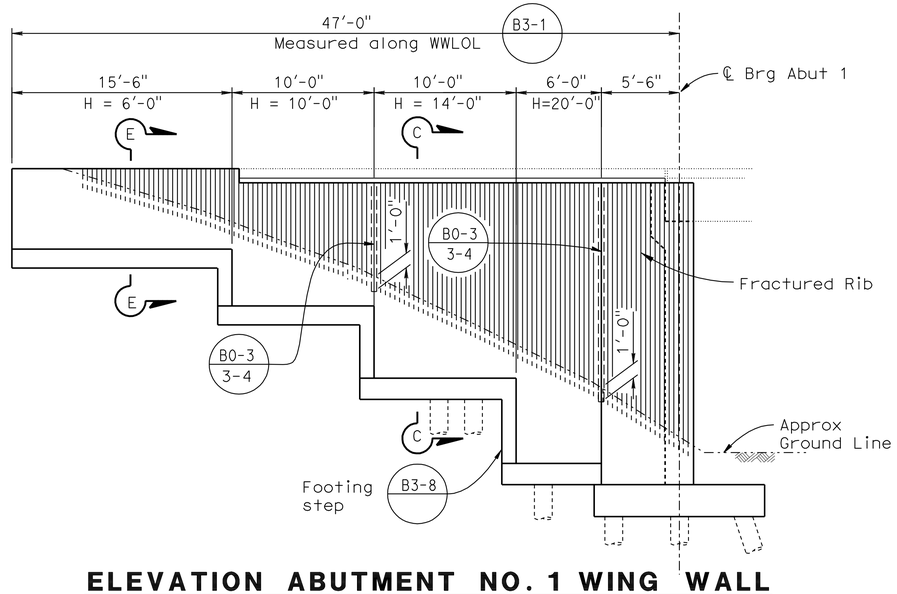

ELEVATION ABUTMENT NO. 1 WING WALL

3/16" = 1'-0"

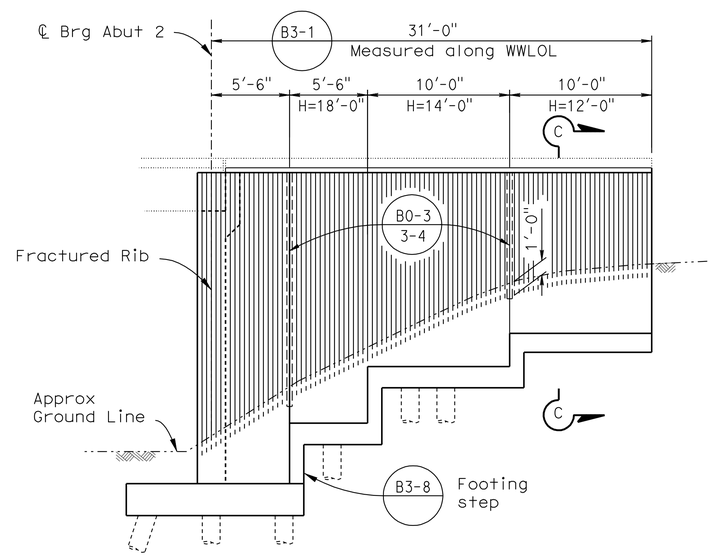

ELEVATION ABUTMENT NO. 2 WING WALL

3/16" = 1'-0"

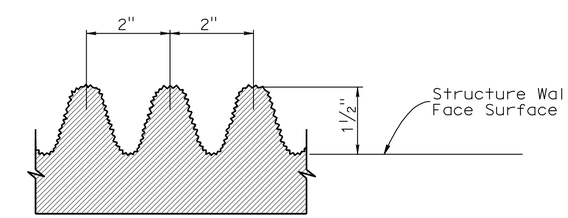

FRACTURED RIB TEXTURE (TYP)

No Scale

NOTE:
THE CONTRACTOR SHALL VERIFY ALL CONTROLLING FIELD DIMENSIONS BEFORE ORDERING OR FABRICATING ANY MATERIAL.

DESIGN	BY D. Azzam	CHECKED H. Vu	
DETAILS	BY R. Kirkland	CHECKED H. Vu	
QUANTITIES	BY T. Sanderson	CHECKED R. Anderson	

STATE OF CALIFORNIA
DEPARTMENT OF TRANSPORTATION

DIVISION OF ENGINEERING SERVICES
STRUCTURE DESIGN
DESIGN BRANCH 10

BRIDGE NO. 56-0387
POST MILE 16.14

JEFFERSON STREET UC (WIDEN)
ABUTMENT LAYOUT

STRUCTURES DESIGN DETAIL SHEET (ENGLISH) (REV. 10/25/05)

ORIGINAL SCALE IN INCHES FOR REDUCED PLANS 0 1 2 3

CU 08
EA 448401

DISREGARD PRINTS BEARING EARLIER REVISION DATES

REVISION DATES: 2-18-10 6-25-10 9-20-10

SHEET 4 OF 16

FILE => 560387fa_lo04.dgn

USERNAME => trmartin DATE PLOTTED => 30-APR-2011 TIME PLOTTED => 13:33

DIST	COUNTY	ROUTE	POST MILES TOTAL PROJECT	SHEET No	TOTAL SHEETS
08	Riv	91	15.6/21.6	1773	2028

REGISTERED CIVIL ENGINEER 11-30-10 DATE

4-25-11
PLANS APPROVAL DATE

REGISTERED PROFESSIONAL ENGINEER HUAN VU No. 60696 Exp. 12-31-10 CIVIL STATE OF CALIFORNIA

The State of California or its officers or agents shall not be responsible for the accuracy or completeness of electronic copies of this plan sheet.

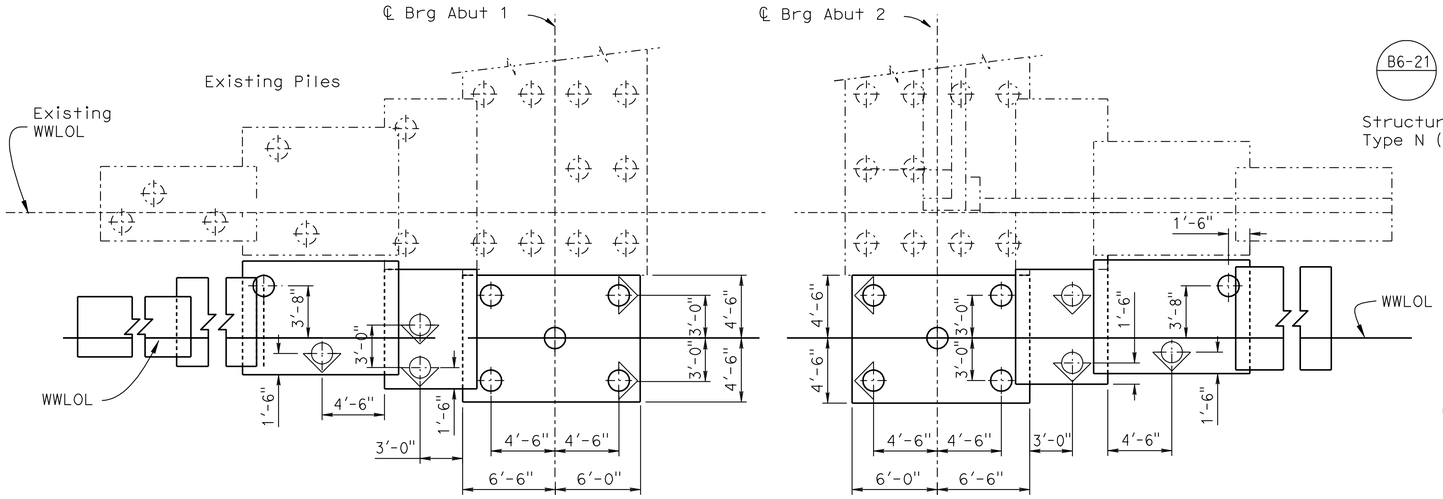

FOOTING LAYOUT

3/16" = 1'-0"

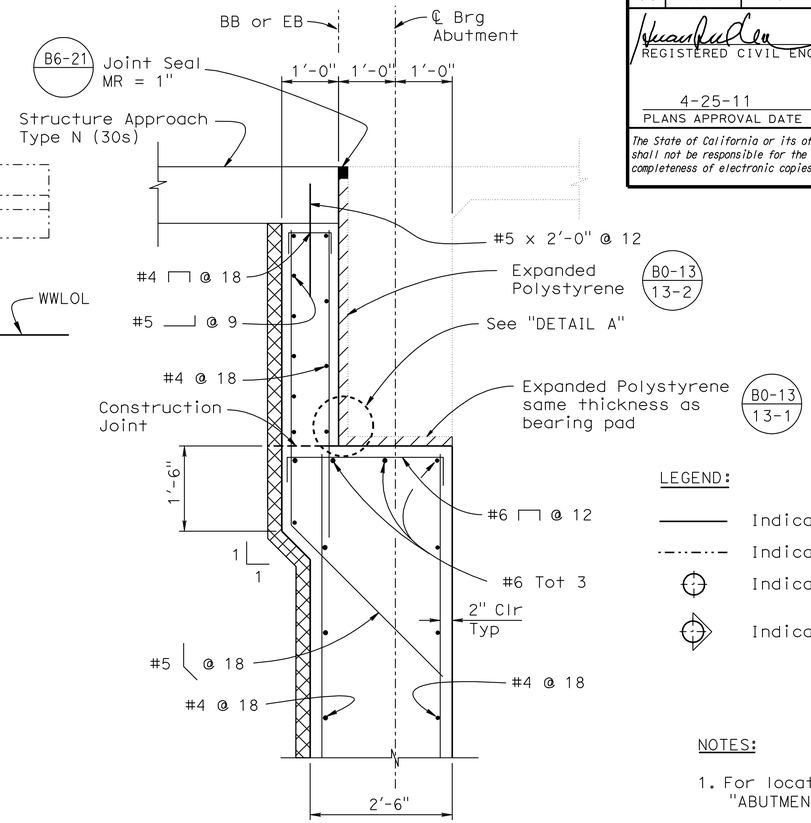

LEGEND:

- Indicates new construction
- Indicates existing structure
- Indicates vertical pile
- Indicates 1:3 battered pile

NOTES:

1. For location of "SECTION B-B" see "ABUTMENT LAYOUT" sheet.
2. For location of "DETAIL A" and "SECTION G-G", see "ABUTMENT DETAILS NO. 2" sheet.

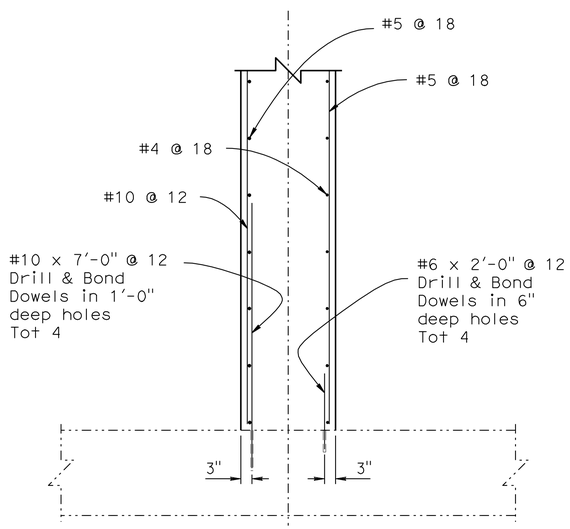

SECTION D-D

1/2" = 1'-0"

NOTE:
THE CONTRACTOR SHALL VERIFY ALL CONTROLLING FIELD DIMENSIONS BEFORE ORDERING OR FABRICATING ANY MATERIAL.

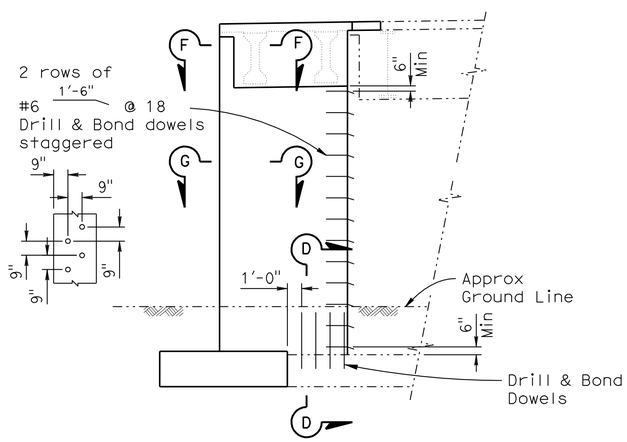

ELEVATION ABUTMENT NO.1

3/16" = 1'-0"

Note:
Abutment No. 1 shown, Abutment No. 2 is similar.

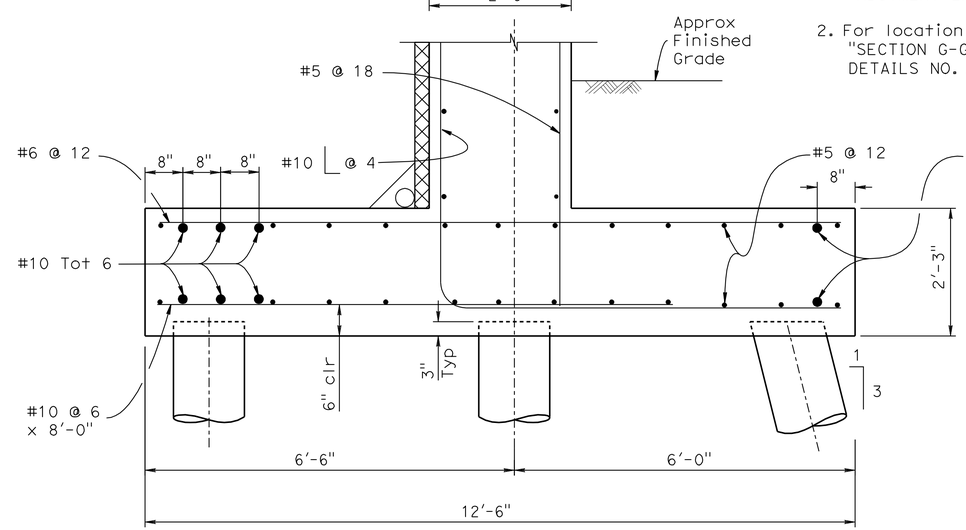

SECTION B-B

3/4" = 1'-0"

DESIGN	BY D. Azzam	CHECKED H. Vu	
DETAILS	BY R. Kirkland/D.Wooten	CHECKED H. Vu	
QUANTITIES	BY T. Sanderson	CHECKED R. Anderson	

STATE OF CALIFORNIA
DEPARTMENT OF TRANSPORTATION

DIVISION OF ENGINEERING SERVICES
STRUCTURE DESIGN
DESIGN BRANCH 10

BRIDGE NO. 56-0387
POST MILE 16.14

JEFFERSON STREET UC (WIDEN)
ABUTMENT DETAILS NO. 1

STRUCTURES DESIGN DETAIL SHEET (ENGLISH) (REV. 10/25/05)

ORIGINAL SCALE IN INCHES FOR REDUCED PLANS 0 1 2 3

CU 08
EA 448401

DISREGARD PRINTS BEARING EARLIER REVISION DATES

REVISION DATES: 4/29/09 6-25-10 9-24-10 10-05-10

SHEET 5 OF 16

FILE => 560387fadt05.dgn

USERNAME => trmart DATE PLOTTED => 30-APR-2011 TIME PLOTTED => 13:33

DIST	COUNTY	ROUTE	POST MILES TOTAL PROJECT	SHEET No	TOTAL SHEETS
08	Riv	91	15.6/21.6	1774	2028

REGISTERED CIVIL ENGINEER 11-30-10 DATE

4-25-11
PLANS APPROVAL DATE

REGISTERED PROFESSIONAL ENGINEER HUAN VU No. 60696 Exp. 12-31-10 CIVIL STATE OF CALIFORNIA

The State of California or its officers or agents shall not be responsible for the accuracy or completeness of electronic copies of this plan sheet.

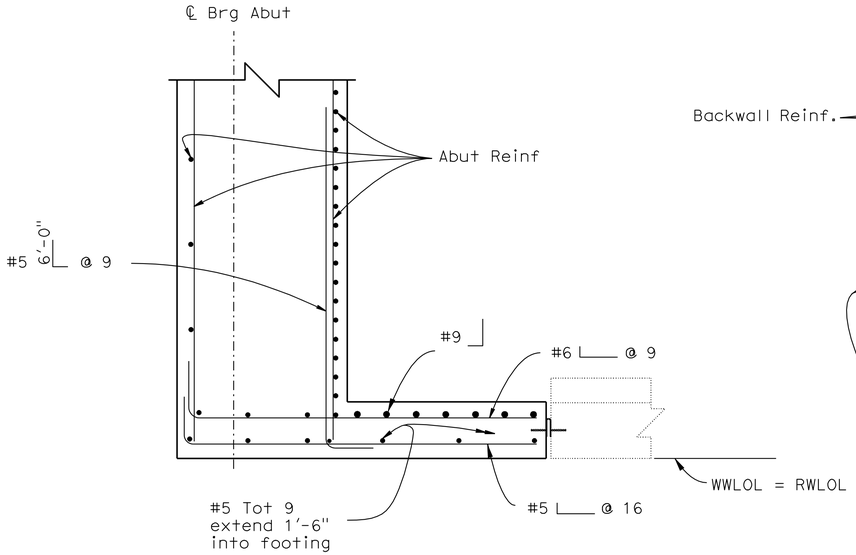

SECTION G-G

3/4" = 1'-0"

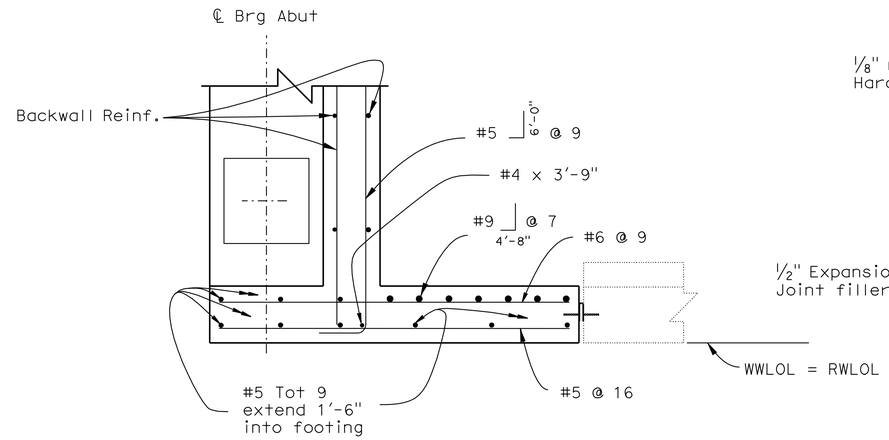

SECTION F-F

3/4" = 1'-0"

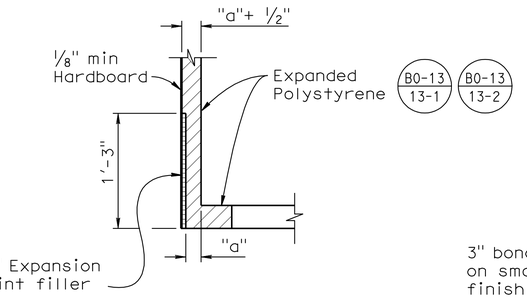

DETAIL A

No Scale

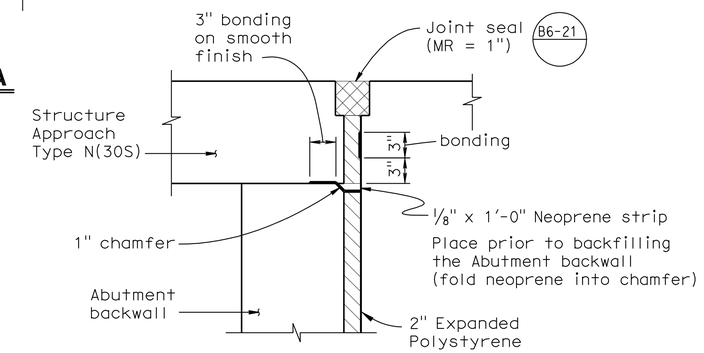

JOINT PROTECTION DETAIL

No Scale

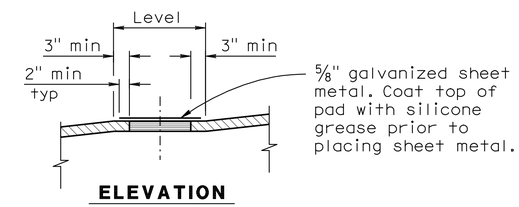

ELEVATION

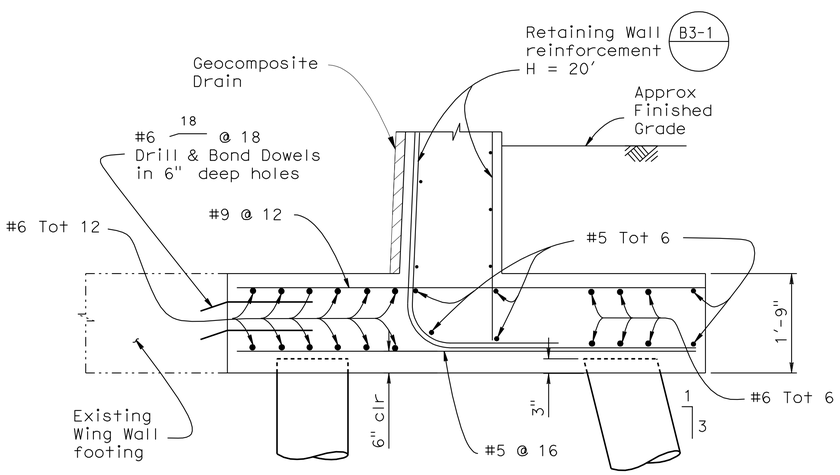

SECTION H-H

3/4" = 1'-0"

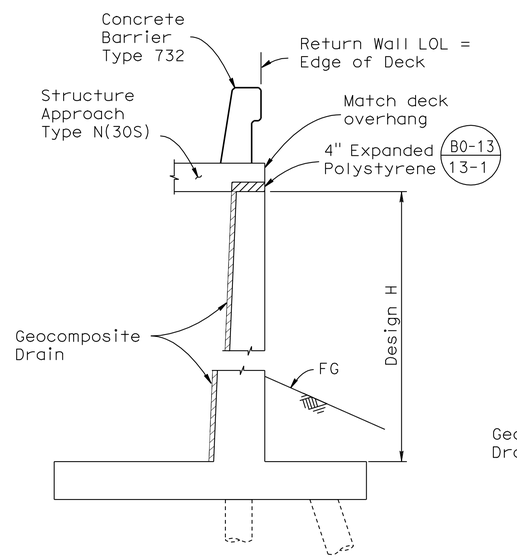

SECTION C-C

3/8" = 1'-0"

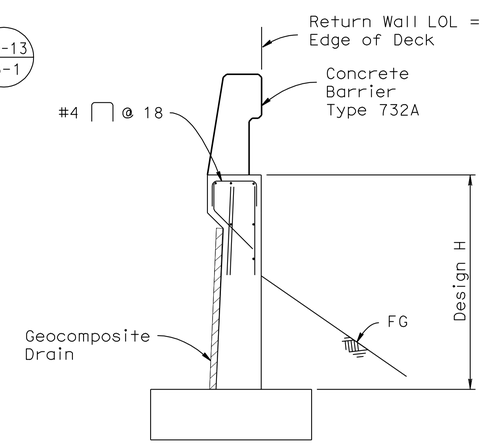

SECTION E-E

1/2" = 1'-0"

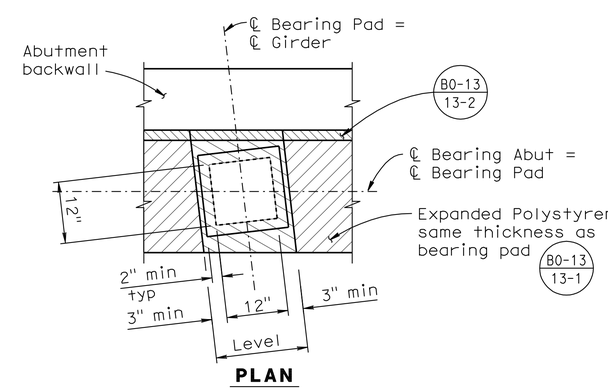

PLAN

BEARING PAD DETAIL

No Scale

NOTES:

1. For location of "SECTION C-C", see "ABUTMENT LAYOUT" sheet.

NOTE:
THE CONTRACTOR SHALL VERIFY ALL CONTROLLING FIELD DIMENSIONS BEFORE ORDERING OR FABRICATING ANY MATERIAL.

	BY	CHECKED
DESIGN	D. Azzam	H. Vu
DETAILS	R. Kirkland/D.Wooten	H. Vu
QUANTITIES	T. Sanderson	R. Anderson

STATE OF CALIFORNIA
DEPARTMENT OF TRANSPORTATION

DIVISION OF ENGINEERING SERVICES
STRUCTURE DESIGN
DESIGN BRANCH 10

BRIDGE NO. 56-0387
POST MILE 16.14

JEFFERSON STREET UC (WIDEN)
ABUTMENT DETAILS NO. 2

STRUCTURES DESIGN DETAIL SHEET (ENGLISH) (REV. 10/25/05)

ORIGINAL SCALE IN INCHES FOR REDUCED PLANS 0 1 2 3

CU 08
EA 448401

DISREGARD PRINTS BEARING EARLIER REVISION DATES → 7/01/09 6-25-10 9-21-10

REVISION DATES

SHEET 6 OF 16

FILE => 560387fadt06.dgn

USERNAME => trmartin DATE PLOTTED => 30-APR-2011 TIME PLOTTED => 13:33

DIST	COUNTY	ROUTE	POST MILES TOTAL PROJECT	SHEET No	TOTAL SHEETS
08	Riv	91	15.6/21.6	1775	2028

REGISTERED CIVIL ENGINEER 11-30-10 DATE

4-25-11
PLANS APPROVAL DATE

REGISTERED PROFESSIONAL ENGINEER HUAN VU No. 60696 Exp. 12-31-10 CIVIL STATE OF CALIFORNIA

The State of California or its officers or agents shall not be responsible for the accuracy or completeness of electronic copies of this plan sheet.

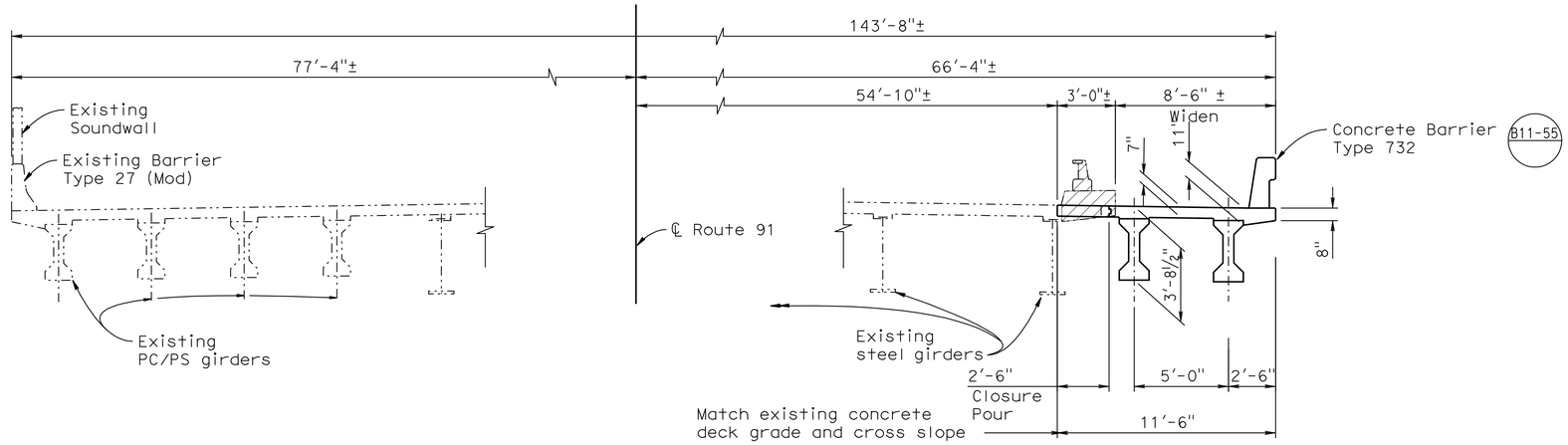

TYPICAL SECTION

¼" = 1'-0"

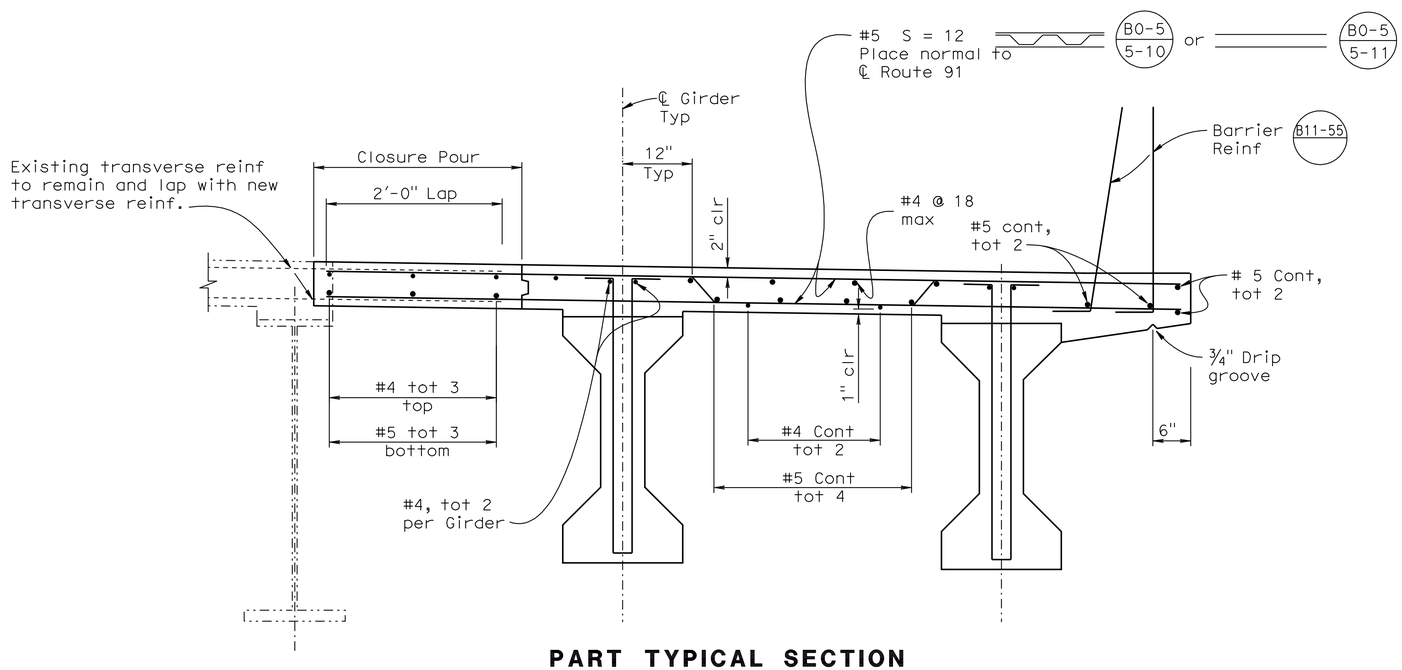

PART TYPICAL SECTION

1" = 1'-0"

NOTES:

1. Closure pour concrete shall be poured after 10 days from the adjacent concrete pour.

LEGEND:

- Indicates new construction
- Indicates existing structure
- Indicates existing reinforcement
- Indicates limits of Bridge Removal (Portion)

NOTE:
THE CONTRACTOR SHALL VERIFY ALL CONTROLLING FIELD DIMENSIONS BEFORE ORDERING OR FABRICATING ANY MATERIAL.

	BY	CHECKED
DESIGN	D. Azzam	H. Vu
DETAILS	R. Kirkland	H. Vu
QUANTITIES	T. Sanderson	R. Anderson

STATE OF CALIFORNIA
DEPARTMENT OF TRANSPORTATION

DIVISION OF ENGINEERING SERVICES
STRUCTURE DESIGN
DESIGN BRANCH 10

BRIDGE NO. 56-0387
POST MILE 16.14

JEFFERSON STREET UC (WIDEN)
TYPICAL SECTION

STRUCTURES DESIGN DETAIL SHEET (ENGLISH) (REV. 10/25/05)

ORIGINAL SCALE IN INCHES FOR REDUCED PLANS 0 1 2 3

CU 08
EA 448401

DISREGARD PRINTS BEARING EARLIER REVISION DATES

REVISION DATES: 7/09/09 6-25-10

SHEET 7 OF 16

FILE => 560387ktsd07.dgn

USERNAME => trmartin DATE PLOTTED => 30-APR-2011 TIME PLOTTED => 13:34

DIST	COUNTY	ROUTE	POST MILES TOTAL PROJECT	SHEET No	TOTAL SHEETS
08	Riv	91	15.6/21.6	1776	2028

REGISTERED CIVIL ENGINEER 11-30-10 DATE

4-25-11
PLANS APPROVAL DATE

REGISTERED PROFESSIONAL ENGINEER HUAN VU No. 60696 Exp. 12-31-10 CIVIL STATE OF CALIFORNIA

The State of California or its officers or agents shall not be responsible for the accuracy or completeness of electronic copies of this plan sheet.

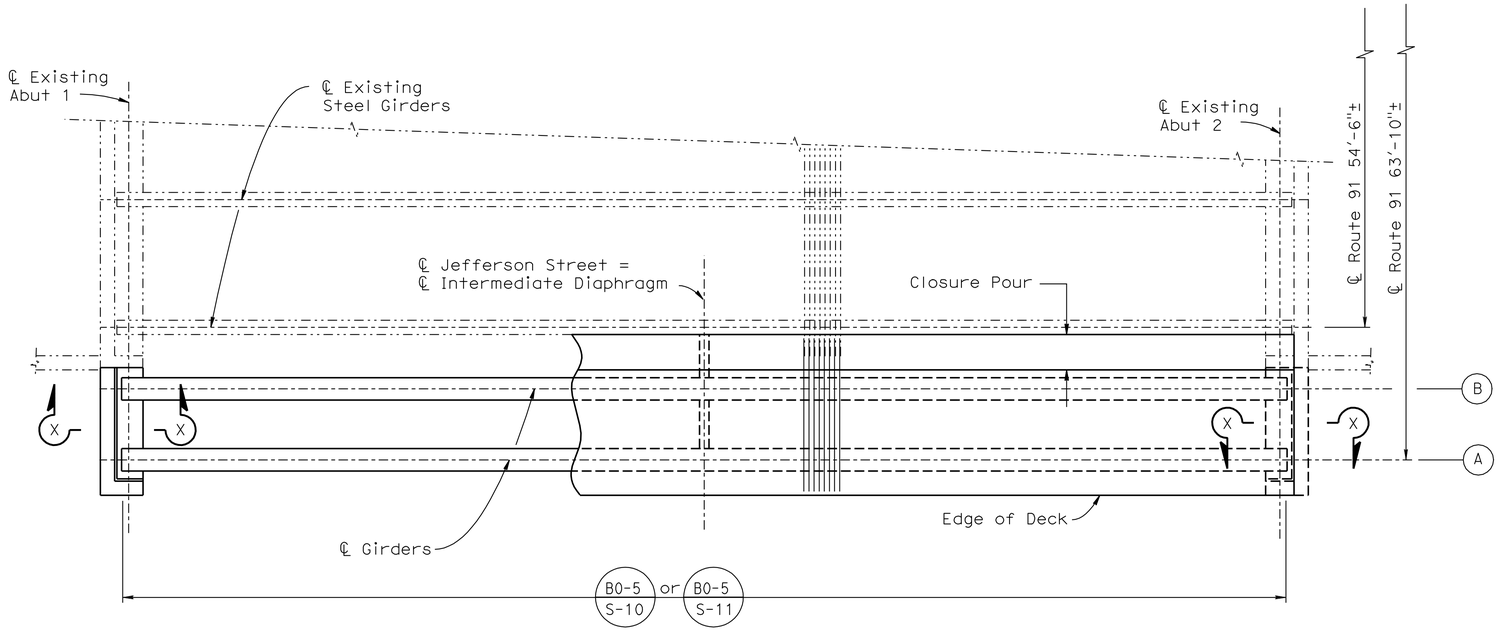

GIRDER LAYOUT

3/16" = 1'-0"

NOTES:

1. For information not shown, see "PRECAST PRESTRESSED I GIRDER" sheet.
2. For bars located at exterior girders, adjust accordingly to fit.

LEGEND:

-·-·-·-·- Denotes existing construction
——— Denotes new construction

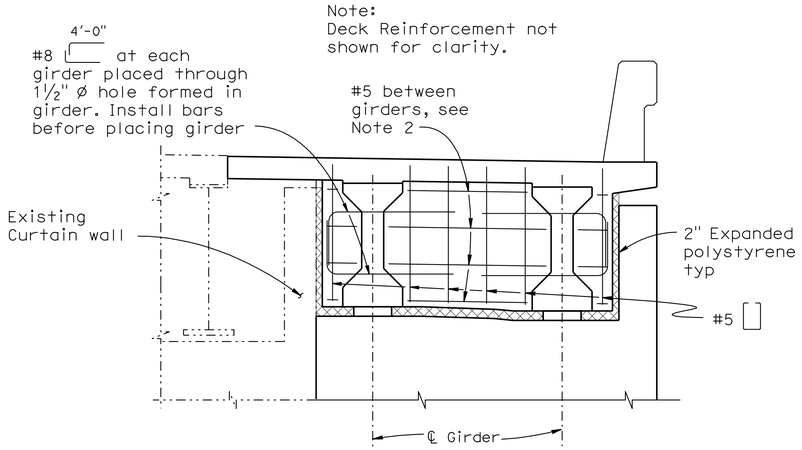

END DIAPHRAGM ELEVATION

½" = 1'-0"

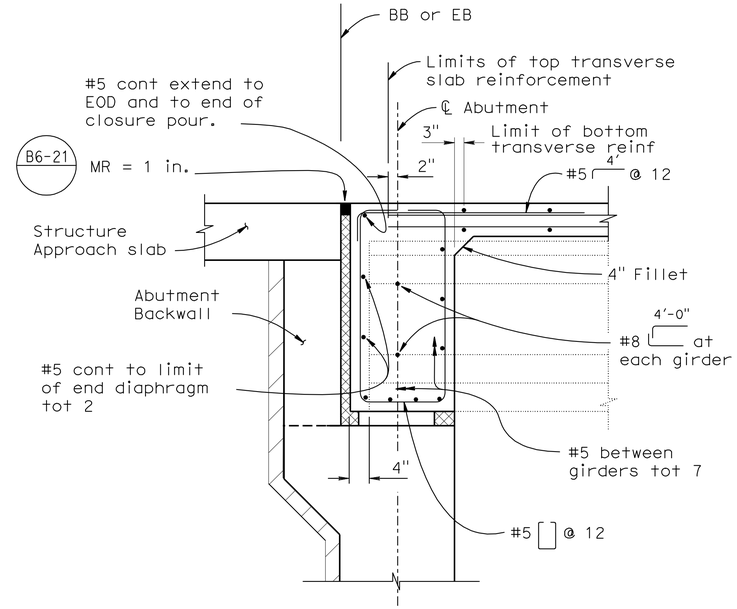

SECTION X-X

¾" = 1'-0"

NOTE:
THE CONTRACTOR SHALL VERIFY ALL CONTROLLING FIELD DIMENSIONS BEFORE ORDERING OR FABRICATING ANY MATERIAL.

DESIGN	BY D. Azzam	CHECKED H. Vu	
DETAILS	BY R. Kirkland	CHECKED H. Vu	
QUANTITIES	BY T. Sanderson	CHECKED R. Anderson	

STATE OF CALIFORNIA
DEPARTMENT OF TRANSPORTATION

DIVISION OF ENGINEERING SERVICES
STRUCTURE DESIGN
DESIGN BRANCH 10

BRIDGE NO. 56-0387
POST MILE 16.14

JEFFERSON STREET UC (WIDEN)
GIRDER LAYOUT

STRUCTURES DESIGN DETAIL SHEET (ENGLISH) (REV. 10/25/05)

ORIGINAL SCALE IN INCHES FOR REDUCED PLANS 0 1 2 3

CU 08
EA 448401

DISREGARD PRINTS BEARING EARLIER REVISION DATES

REVISION DATES: 2-18-10

SHEET 8 OF 16

FILE => 560387lgdt08.dgn

USERNAME => trmartin DATE PLOTTED => 30-APR-2011 TIME PLOTTED => 13:34

DIST.	COUNTY	ROUTE	POST MILES TOTAL PROJECT	SHEET NO.	TOTAL SHEETS
08	Riv	91	15.6/21.6	1777	2028

REGISTERED ENGINEER - CIVIL 11-30-10

4-25-11
PLANS APPROVAL DATE

REGISTERED PROFESSIONAL ENGINEER HUAN VU No. 60696 Exp. 12-31-10 CIVIL STATE OF CALIFORNIA

The State of California or its officers or agents shall not be responsible for the accuracy or completeness of electronic copies of this plan sheet.

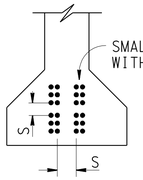

CLEARANCES FOR PRETENSIONED STRANDS

1. Strands may be bundled in groups consisting of 3 vertically, 2 horizontally and separated at the ends
2. The Min distance "S" between groups or individual strands is 1½" for ⅜" Ø strands, 1¾" for ½" Ø strands, 2" for 0.6" Ø strands
3. "S" is measured between centers of adjacent strands
4. Approval for Engineer is required for deviation

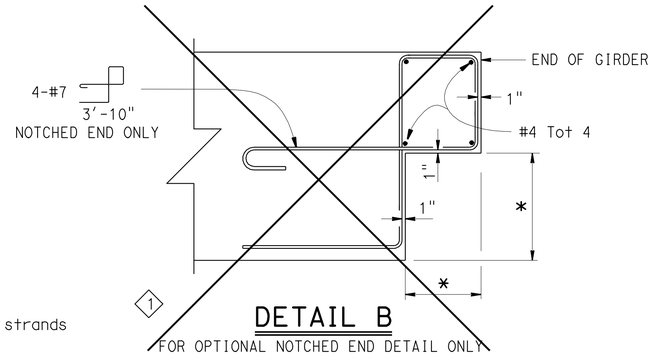

1 DETAIL B
FOR OPTIONAL NOTCHED END DETAIL ONLY

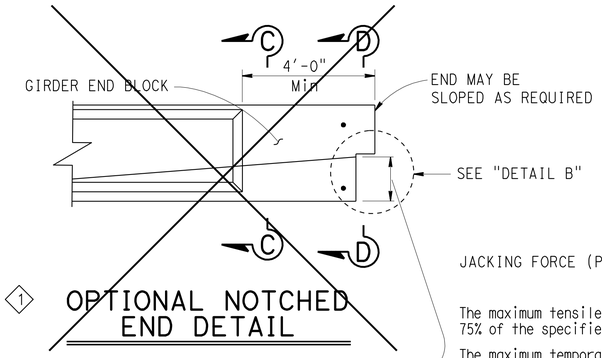

1 OPTIONAL NOTCHED END DETAIL

GENERAL NOTES:

JACKING FORCE (P): The jacking force required at the point of control along the span. The jacking force does not include any fabrication specific losses.

The maximum tensile stress in the prestressing steel upon release shall not exceed 75% of the specified minimum ultimate tensile strength of the prestressing steel.

The maximum temporary tensile stress (jacking stress) in the prestressing steel shall not exceed 80% of the specified minimum ultimate tensile strength of the prestressing steel.

CONCRETE STRENGTH: f'ci is at time of initial stressing
f'c is at 28 days

DEFLECTION COMPONENTS: Informational - to be used in setting screed line elevations

Screed line elevations for deck concrete will be determined by the Engineer.

Contractor may interpolate "P" and "X" values between limits shown, as approved by the Engineer.

Use epoxy coated reinforcement in Environmental Area III

Girder location or designation and length	Jacking Force (P) (Kips) "X"		"Y" (in)	Concrete Strength (ksi) f'ci	f'c	Midspan Dead Load Deflection (inches) Deck	Rail
ⒶⒷ	4"	750	14	5	6	4.21	0.6
	6"	900		5.5	5	4.21	0.6

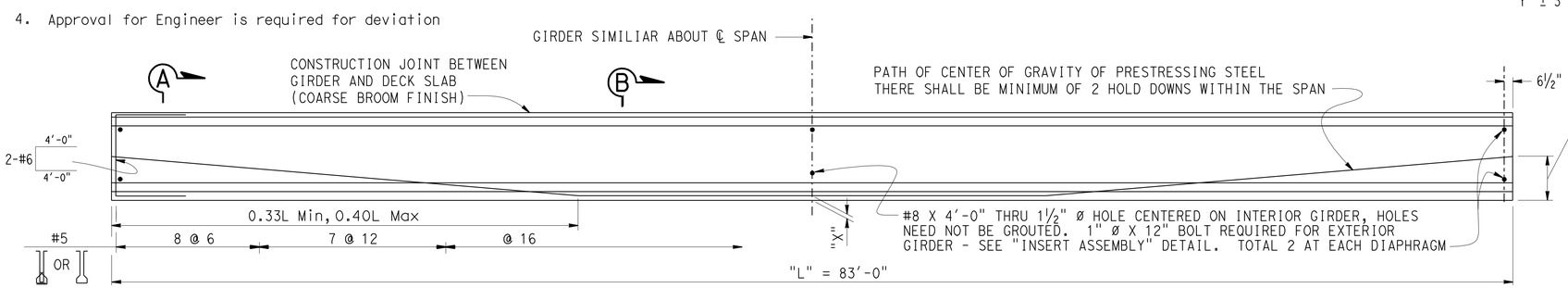

ELEVATION

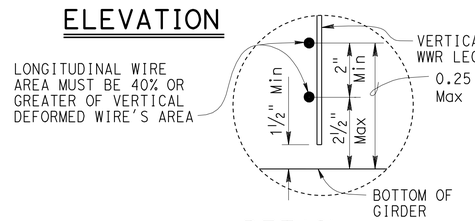

DETAIL A

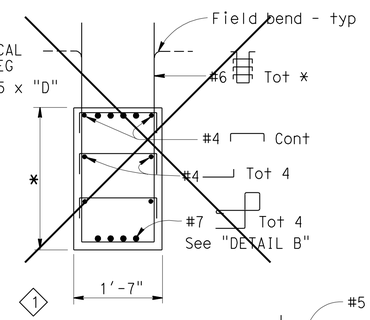

1 SECTION D-D

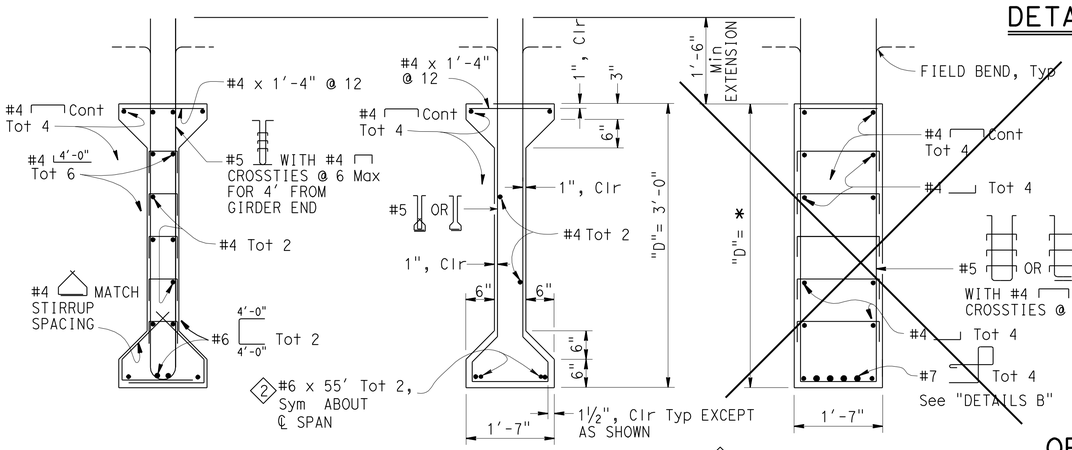

SECTION A-A
SECTION B-B
1 SECTION C-C

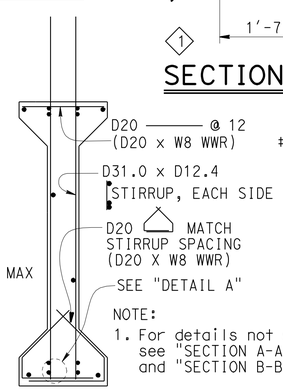

NOTE:
1. For details not shown, see "SECTION A-A" and "SECTION B-B"

OPTIONAL WELDED WIRE REINFORCEMENT (WWR) DETAIL

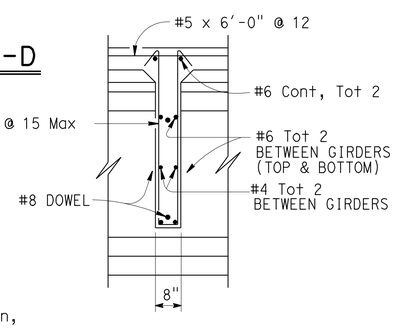

SECTION E-E

WWR NOTE: MANUFACTURER'S SHOP DRAWING SHALL CONFORM TO THE REINFORCEMENT SHOWN ON THIS SHEET AS NOTED AND THE SPECIAL PROVISIONS

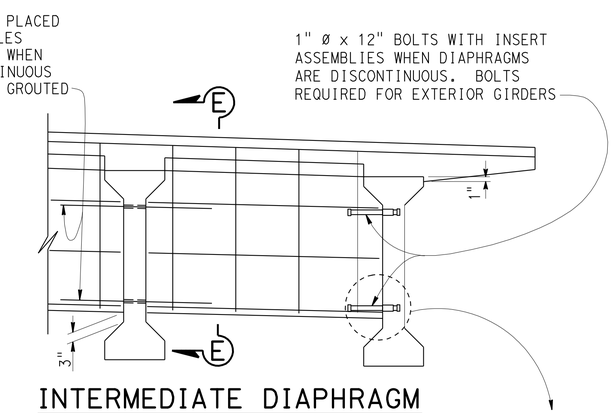

INTERMEDIATE DIAPHRAGM

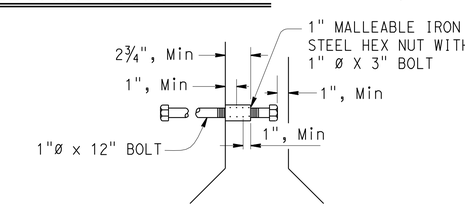

INSERT ASSEMBLY

REVISED STANDARD DRAWING

FILE NO. xs 1-120-e

APPROVED BY Jim Ma — RESPONSIBLE TECHNICAL SPECIALIST
APPROVAL DATE 02-01-2010

RELEASED BY Susan Hida — RESPONSIBLE OFFICE CHIEF
RELEASE DATE 02-01-2010

1 Detail not used
2 Revised Detail

STATE OF CALIFORNIA DEPARTMENT OF TRANSPORTATION

DIVISION OF ENGINEERING SERVICES

BRIDGE NO. 56-0387
POST MILE 16.14

JEFFERSON STREET UC (WIDEN)
PRECAST PRESTRESSED I GIRDER

DS OSD 2147A (ENGLISH STANDARD DRAWING "XS" BORDER REV. 01/11/08)

ORIGINAL SCALE IN INCHES FOR REDUCED PLANS 0 1 2 3

CU 08
EA 448401

DISREGARD PRINTS BEARING EARLIER REVISION DATES 6-25-10

REVISION DATES (PRELIMINARY STAGE ONLY)

SHEET 9 OF 16

560387lgdt09.dgn USERNAME => trmartin

DATE PLOTTED => 30-APR-2011 TIME PLOTTED => 13:34

DIST.	COUNTY	ROUTE	MILE POST TOTAL PROJECT	SHEET NO.	TOTAL SHEETS
08	Riv	91	15.6/21.6	1778	2028

REGISTERED ENGINEER - CIVIL 11-30-10

4-25-11
PLANS APPROVAL DATE

REGISTERED PROFESSIONAL ENGINEER HUAN VU No. 60696 Exp. 12-31-10 CIVIL STATE OF CALIFORNIA

The State of California or its officers or agents shall not be responsible for the accuracy or completeness of electronic copies of this plan sheet.

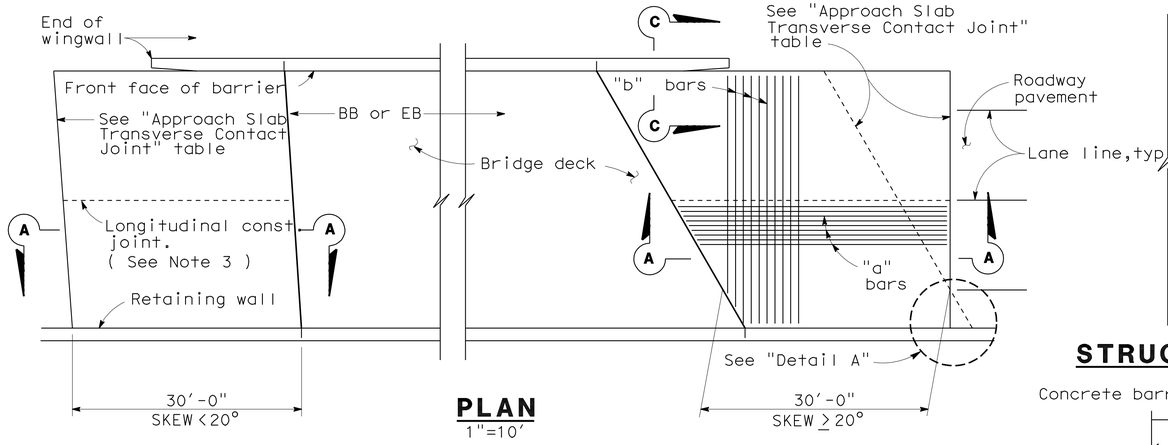

PLAN
1"=10'

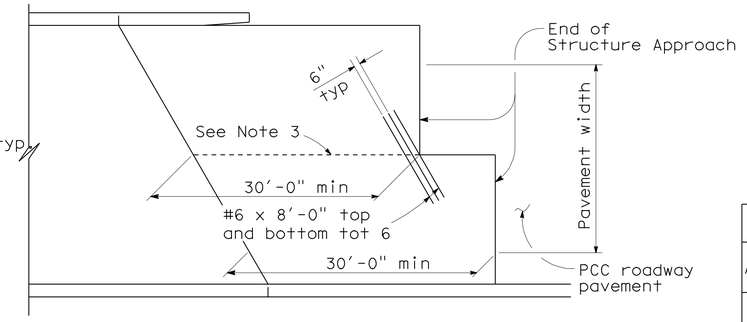

STRUCTURE APPROACH - END STAGGER DETAIL
No Scale

APPROACH SLAB TRANSVERSE CONTACT JOINT		
APPROACH SKEW	WITH AC ROADWAY PAVEMENT	WITH PCC ROADWAY PAVEMENT
< 20°	Parallel to face of paving notch	Parallel to face of paving notch
20° - 45°	Parallel to face of P N use (Detail A)	Stagger lines 24' to 36' apart.
> 45°	Parallel to face of P N use (Detail A)	Stagger at each lane line.

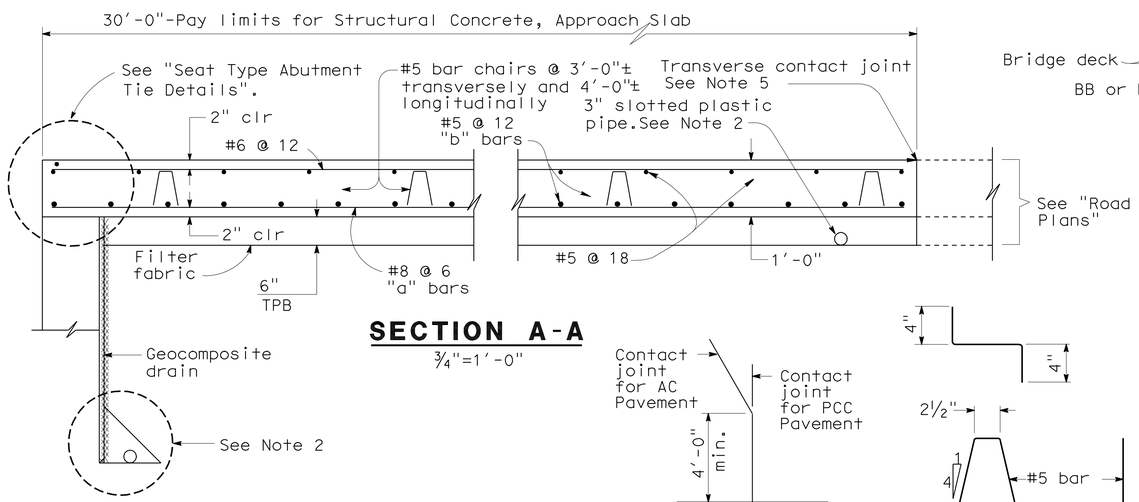

SECTION A-A
¾"=1'-0"

DETAIL A
No Scale

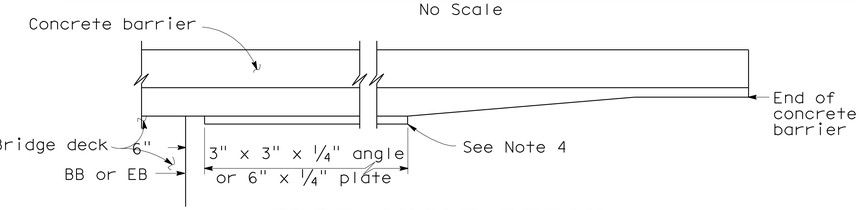

EDGE ANGLE DETAIL
½"=1'-0"

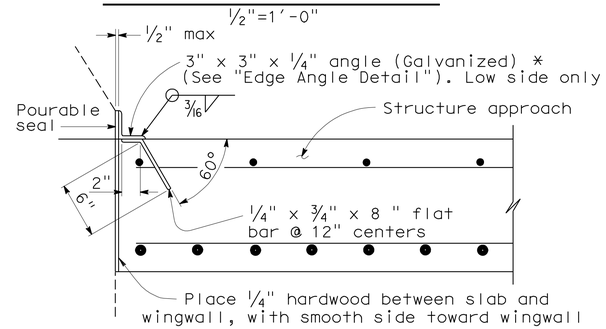

*(TO BE USED WITH TYPE 25 OR TYPE 27 CONCRETE BARRIER)

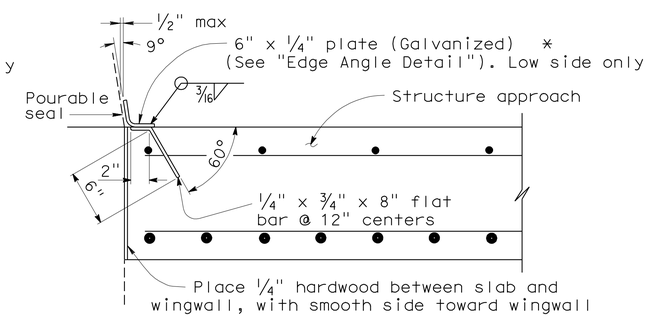

*(TO BE USED WITH TYPE 732 OR TYPE 736 CONCRETE BARRIER)

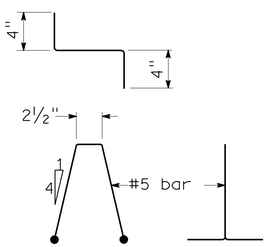

BAR CHAIR DETAIL
1½"=1'-0"

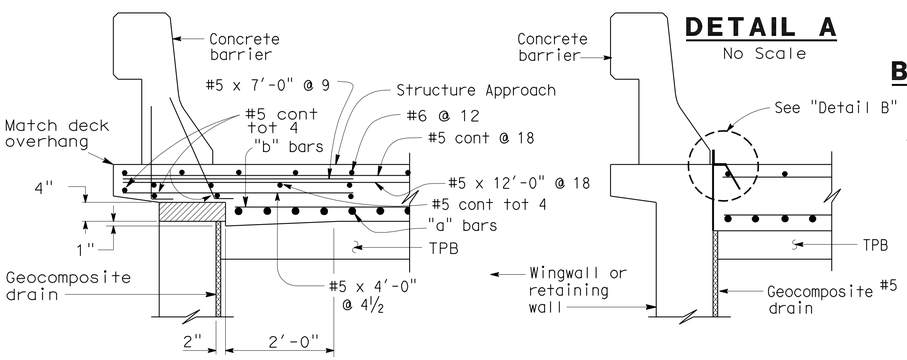

TYPE E-1 TYPE E-2

SECTION C-C
¾"=1'-0"

(Type E-1 to be used,unless otherwise shown on plans)

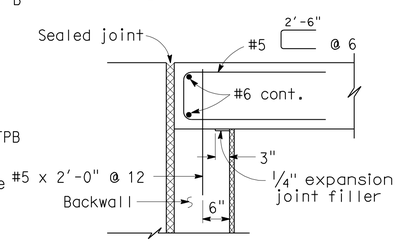

MR ≤ 2"

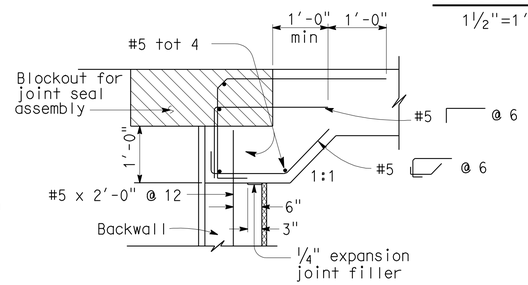

MR > 2"

DETAIL B
1½"=1'-0"

SEAT TYPE ABUTMENT TIE DETAILS (SEE NOTE 1)
¾"=1'-0"

NOTES:

1. For details not shown,see Structure Plans. For MR ≤ 2",adjust bar reinforcement to clear a sawcut for sealed joint,when required.
2. For drainage details,see "Structure Approach Drainage Details" sheet.
3. Longitudinal construction joints,when permitted by the Engineer, shall be located on lane lines.
4. End angle or plate at beginning of barrier transition, end of wingwall or end of structure approach as applicable.
5. For transverse contact joint with new PCC paving, refer to Standard Plan P10.
6. At the contractor's option, approach slab transverse reinforcement may be placed parallel to paving notch. Spacing of transverse reinforcement is measured along ℄ roadway.

Remove all polystyrene.

STANDARD DRAWING				
RELEASE DATE 3/14/05	DESIGN	BY M.TRAFFALIS	CHECKED E.THORKILDSEN	RELEASED BY
FILE NO. xs3-120e	DETAILS	BY R.YEE	CHECKED E.THORKILDSEN	OFFICE CHIEF
	SUBMITTED	BY M.HA	DRAWING DATE 4/98	

STATE OF CALIFORNIA DEPARTMENT OF TRANSPORTATION

DIVISION OF ENGINEERING SERVICES

BRIDGE NO. 56-0387
MILE POST 16.1

JEFFERSON STREET UC (WIDEN)
STRUCTURE APPROACH TYPE N(30S)

DS OSD 2147A (ENGLISH) (REV. X/XX/XX)

ORIGINAL SCALE IN INCHES FOR REDUCED PLANS 0 1 2 3

CU 08
EA 448401

DISREGARD PRINTS BEARING EARLIER REVISION DATES 6-25-10

REVISION DATES (PRELIMINARY STAGE ONLY)

SHEET 10 OF 16

USERNAME => trmartin

560387ssa10.dgn

DATE PLOTTED => 30-APR-2011 TIME PLOTTED => 13:34

DIST.	COUNTY	ROUTE	MILE POST TOTAL PROJECT	SHEET NO.	TOTAL SHEETS
08	Riv	91	15.6/21.6	1779	2028

REGISTERED ENGINEER - CIVIL 11-30-10

4-25-11
PLANS APPROVAL DATE

REGISTERED PROFESSIONAL ENGINEER HUAN VU No. 60696 Exp. 12-31-10 CIVIL STATE OF CALIFORNIA

The State of California or its officers or agents shall not be responsible for the accuracy or completeness of electronic copies of this plan sheet.

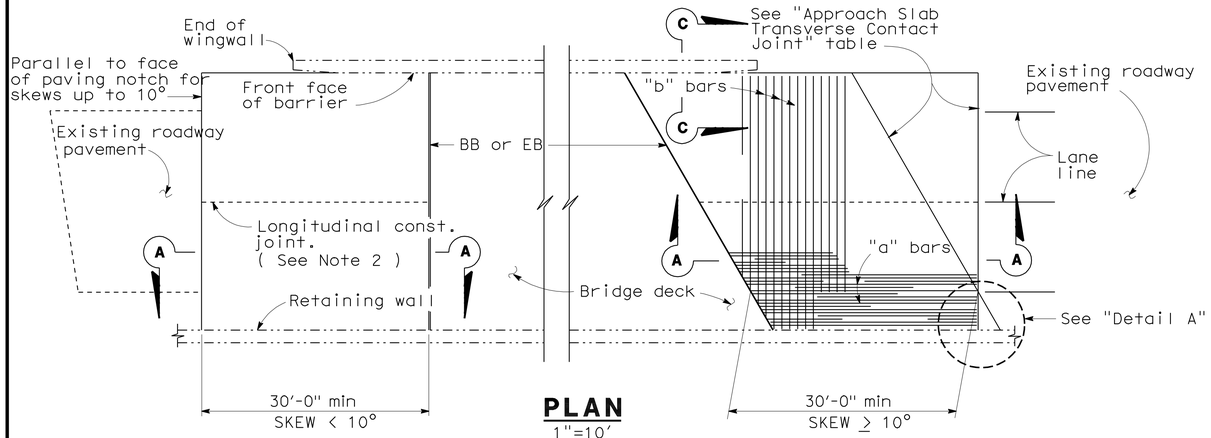

PLAN
1"=10'

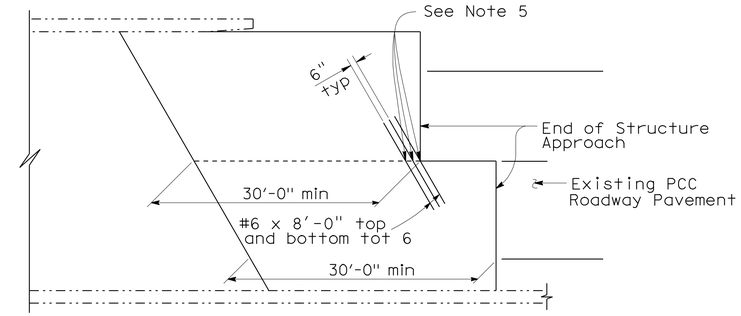

STRUCTURE APPROACH - END STAGGER DETAIL
No Scale

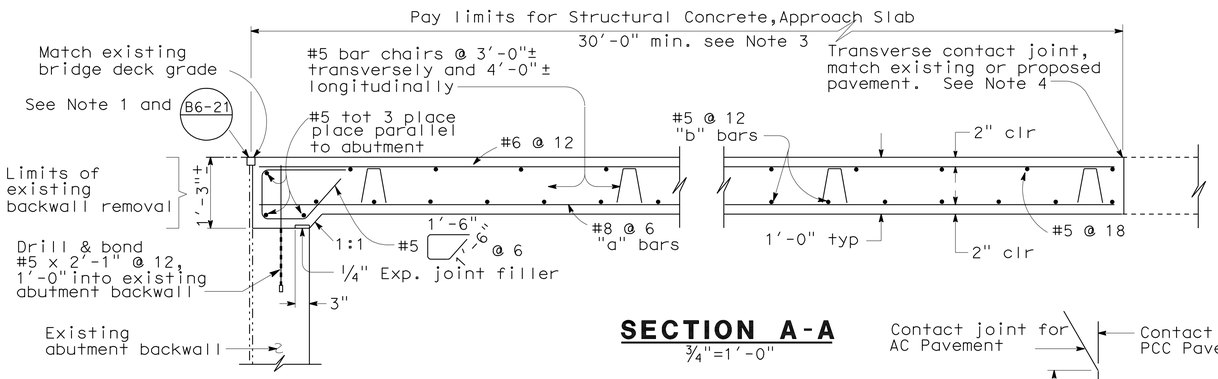

SECTION A-A
3/4"=1'-0"

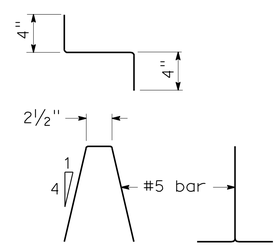

BAR CHAIR DETAIL
1 1/2"=1'-0"

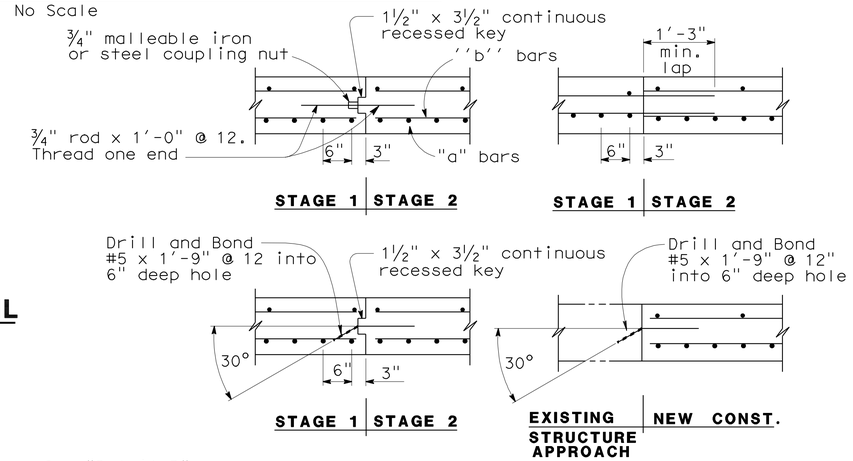

LONGITUDINAL CONSTRUCTION JOINT ALTERNATIVES
3/4"=1'-0"

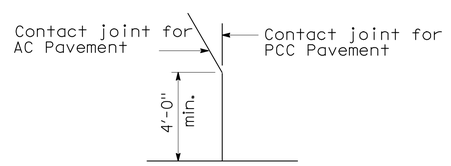

DETAIL A
No Scale

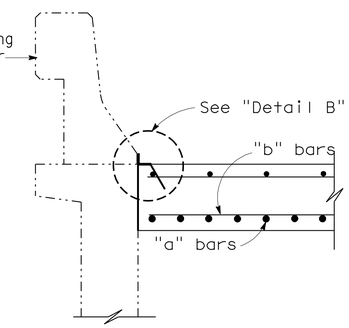

SECTION C-C
3/4"=1'-0"

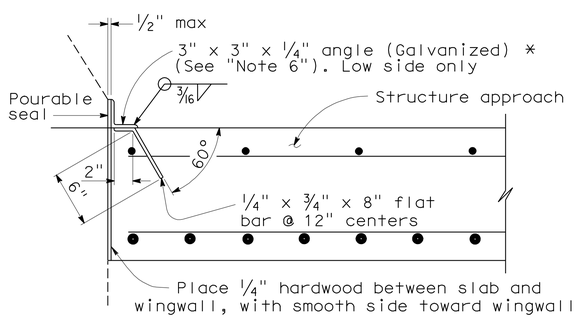

*(TO BE USED WITH TYPE 25 OR TYPE 27 CONCRETE BARRIER)

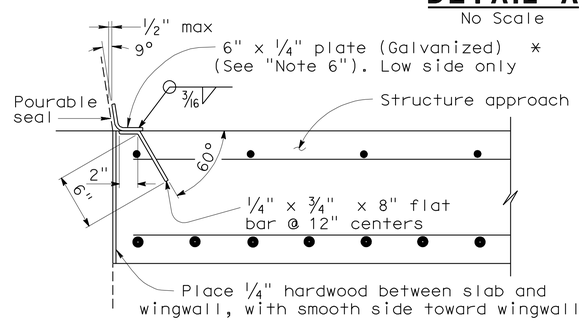

*(TO BE USED WITH TYPE 732 OR TYPE 736 CONCRETE BARRIER)

DETAIL B
1 1/2"=1'-0"

APPROACH SLAB TRANSVERSE CONTACT JOINT		
APPROACH SKEW	WITH AC ROADWAY PAVEMENT	WITH PCC ROADWAY PAVEMENT
< 10°	Parallel to face of paving notch	Parallel to face of paving notch
10°- 45°	Parallel to face of P N use (Detail A)	Stagger lines 24' to 36' apart
> 45°	Parallel to face of P N use (Detail A)	Stagger at each lane line

NOTES:

1. Sealed joint, for M.R. see Structure Plans. Adjust bar reinforcement to clear a sawcut for sealed joint, when required.
2. Longitudinal construction joints, when permitted by Engineer, shall be located on lane lines.
3. Transverse contact joint shall be a minimum of 5'-0" from an existing or constructed weakened plane joint.
4. For transverse contact joint with new PCC paving, refer to Standard Plan P10.
5. Couplers are required for stage construction.
6. End angle or plate at beginning of barrier transition, end of wingwall or end of structure approach as applicable.

NOTE:

THE CONTRACTOR SHALL VERIFY ALL CONTROLLING FIELD DIMENSIONS BEFORE ORDERING OR FABRICATING ANY MATERIAL.

STANDARD DRAWING

RELEASE DATE 3/14/05	DESIGN	BY M.TRAFFALIS	CHECKED E.THORKILDSEN	RELEASED BY
	DETAILS	BY R.YEE	CHECKED E.THORKILDSEN	
FILE NO. xs3-130e	SUBMITTED	BY M.HA	DRAWING DATE 8/92	OFFICE CHIEF

STATE OF CALIFORNIA DEPARTMENT OF TRANSPORTATION

DIVISION OF ENGINEERING SERVICES

BRIDGE NO. 56-0387
MILE POST 16.14

JEFFERSON STREET UC (WIDEN)

STRUCTURE APPROACH TYPE R(30S)

DS OSD 2147A (ENGLISH) (REV. X/XX/XX)

ORIGINAL SCALE IN INCHES FOR REDUCED PLANS 0 1 2 3

CU 08
EA 448401

DISREGARD PRINTS BEARING EARLIER REVISION DATES 6-25-10

REVISION DATES (PRELIMINARY STAGE ONLY)

SHEET 11 OF 16

USERNAME => trmartin

560387ssa11.dgn

DATE PLOTTED => 30-APR-2011 TIME PLOTTED => 13:34

DIST.	COUNTY	ROUTE	MILE POST TOTAL PROJECT	SHEET NO.	TOTAL SHEETS
08	Riv	91	15.6/21.6	1780	2028

REGISTERED ENGINEER - CIVIL 11-30-10

4-25-11
PLANS APPROVAL DATE

REGISTERED PROFESSIONAL ENGINEER HUAN VU No. 60696 Exp. 12-31-10 CIVIL STATE OF CALIFORNIA

The State of California or its officers or agents shall not be responsible for the accuracy or completeness of electronic copies of this plan sheet.

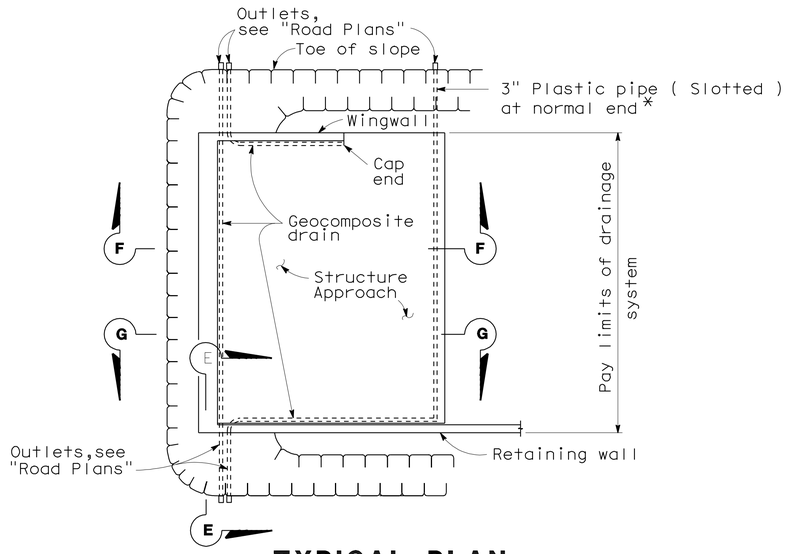

TYPICAL PLAN

1"=10'

*For pipe layout at staggered end, see "Detail B".

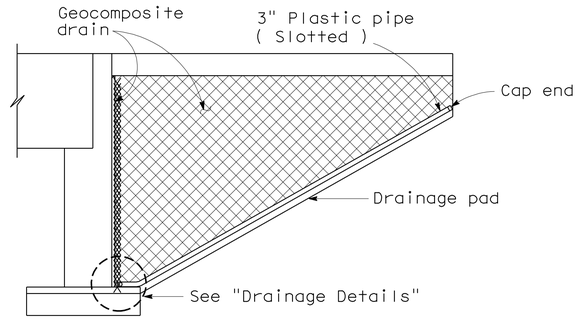

CANTILEVER WINGWALL SECTION F-F

1/4"=1'-0"

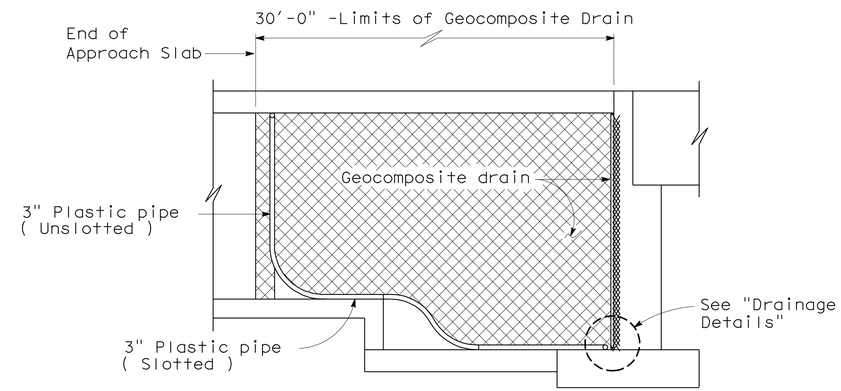

RETAINING WALL WINGWALL SECTION G-G

1/4"=1'-0"

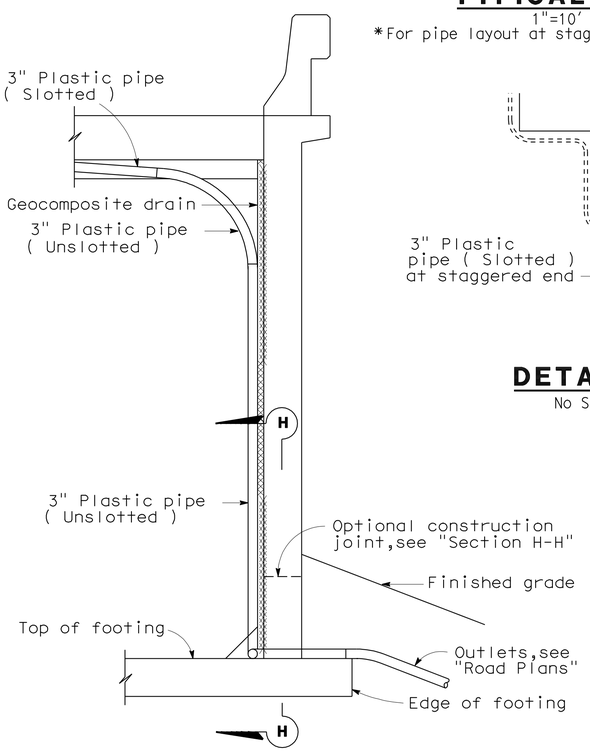

SECTION E-E

1/2"=1'-0"

NOTE: Bends and junctions in 3" plastic pipe are 30" radius min.

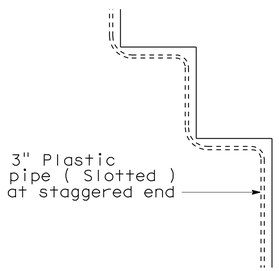

DETAIL B

No Scale

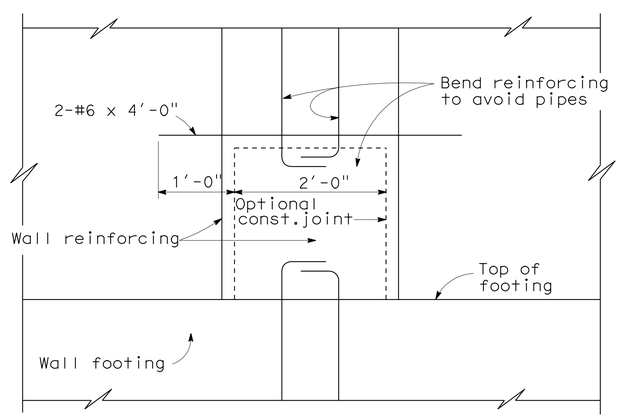

SECTION H-H

1"=1'-0"

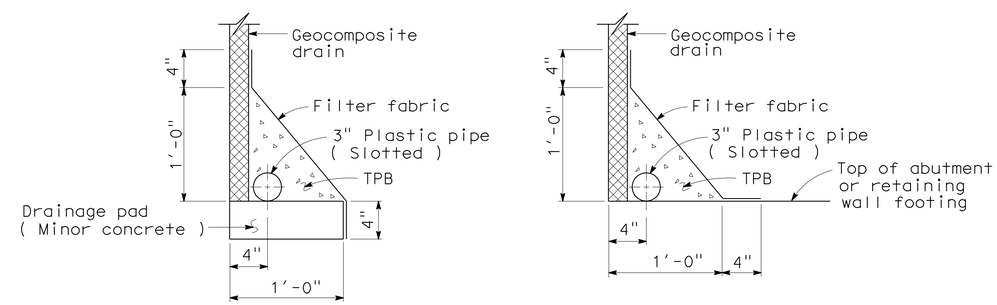

WITHOUT FOOTING WITH FOOTING

DRAINAGE DETAILS

1 1/2"=1'-0"

STANDARD DRAWING				
RELEASE DATE 4/23/98	DESIGN BY M.TRAFFALIS	CHECKED E.THORKILDSEN	RELEASED BY	
FILE NO. xs3-110e	DETAILS BY R.YEE	CHECKED E.THORKILDSEN		
	SUBMITTED BY M.HA	DRAWING DATE 4/98	OFFICE CHIEF	

DS OSD 2147A (ENGLISH) (REV. X/XX/XX)

STATE OF CALIFORNIA DEPARTMENT OF TRANSPORTATION

DIVISION OF ENGINEERING SERVICES

CU 08
EA 448401

BRIDGE NO. 56-0387
MILE POST 16.14

JEFFERSON STREET UC (WIDEN)

STRUCTURE APPROACH DRAINAGE DETAILS

ORIGINAL SCALE IN INCHES FOR REDUCED PLANS 0 1 2 3

DISREGARD PRINTS BEARING EARLIER REVISION DATES 6-25-10

REVISION DATES (PRELIMINARY STAGE ONLY)

SHEET 12 OF 16

USERNAME => trmartin

560387ssadd12.dgn

DATE PLOTTED => 30-APR-2011 TIME PLOTTED => 13:35

DIST	COUNTY	ROUTE	POST MILES TOTAL PROJECT	SHEET No	TOTAL SHEETS
08	Riv	91	15.6/21.6	1781	2028

REGISTERED CIVIL ENGINEER 11-30-10 DATE

4-25-11
PLANS APPROVAL DATE

REGISTERED PROFESSIONAL ENGINEER HUAN VU No. 60696 Exp. 12-31-10 CIVIL STATE OF CALIFORNIA

The State of California or its officers or agents shall not be responsible for the accuracy or completeness of electronic copies of this plan sheet.

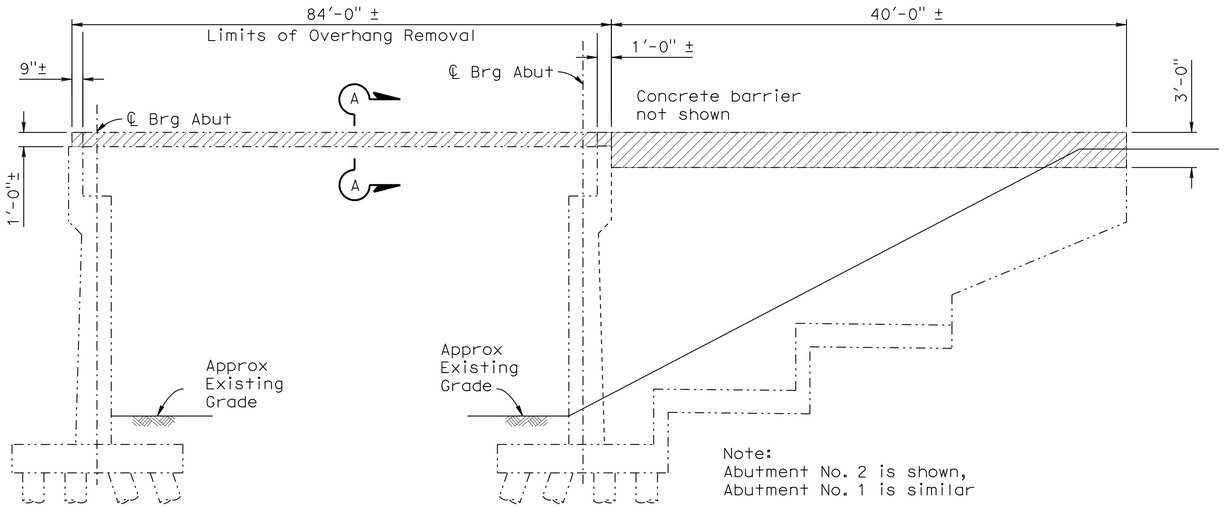

LIMITS OF REMOVAL
EXISTING ABUTMENT AND WINGWALL

NO SCALE

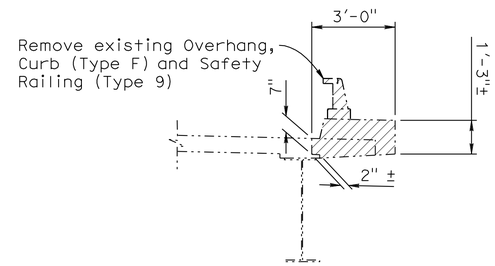

SECTION A-A

LIMITS OF REMOVAL
OVERHANG, CURB (TYPE F) & SAFETY RAILING (TYPE 9)

NO SCALE

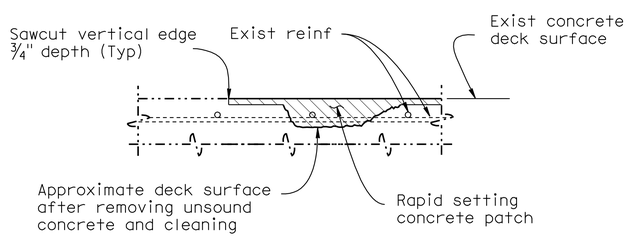

DECK REPAIR DETAIL

NO SCALE

NOTES:

1. Approximate damaged area is 0.2% of treated area
2. Location will be determined by the engineer
3. Reinforcement may be encountered during deck concrete removal and is to remain undamaged.

NOTE:
THE CONTRACTOR SHALL VERIFY ALL CONTROLLING FIELD DIMENSIONS BEFORE ORDERING OR FABRICATING ANY MATERIAL.

LEGEND:

- Denotes existing construction
- Denotes new construction
- Denotes limits of Bridge Removal (Portion)
- Denotes Deck Repair

	BY	CHECKED
DESIGN	D. Azzam	H. Vu
DETAILS	R. Kirkland/D. Wooten	H. Vu
QUANTITIES	T. Sanderson	R. Anderson

STATE OF CALIFORNIA
DEPARTMENT OF TRANSPORTATION

DIVISION OF ENGINEERING SERVICES
STRUCTURE DESIGN
DESIGN BRANCH 10

BRIDGE NO. 56-0387
POST MILE 16.14

JEFFERSON STREET UC (WIDEN)
MISCELLANEOUS DETAILS

STRUCTURES DESIGN DETAIL SHEET (ENGLISH) (REV. 10/25/05)

ORIGINAL SCALE IN INCHES FOR REDUCED PLANS 0 1 2 3

CU 08
EA 448401

DISREGARD PRINTS BEARING EARLIER REVISION DATES → 6-16-10

REVISION DATES

SHEET 13 OF 16

FILE => 560387umiscdt13.dgn

USERNAME => trmartin DATE PLOTTED => 30-APR-2011 TIME PLOTTED => 13:35

DIST	COUNTY	ROUTE	POST MILES TOTAL PROJECT	SHEET No	TOTAL SHEETS
08	Riv	91	15.6/21.6	1782	2028

REGISTERED CIVIL ENGINEER 7-14-10

4-25-11
PLANS APPROVAL DATE

REGISTERED PROFESSIONAL ENGINEER Yeo Yoon No. 73532 Exp. 12-31-10 CIVIL STATE OF CALIFORNIA

The State of California or its officers or agents shall not be responsible for the accuracy or completeness of electronic copies of this plan sheet.

This LOTB sheet was prepared in accordance with the Caltrans Soil & Rock Logging, Classification, & Presentation Manual (June 2007).

BENCH MARK

PNO 511 Set 1" IP w/
Aluminum Cap Stamped "PN051"
N 2284530.89
E 6209175.5
Elev 835.24' NGVD 29.

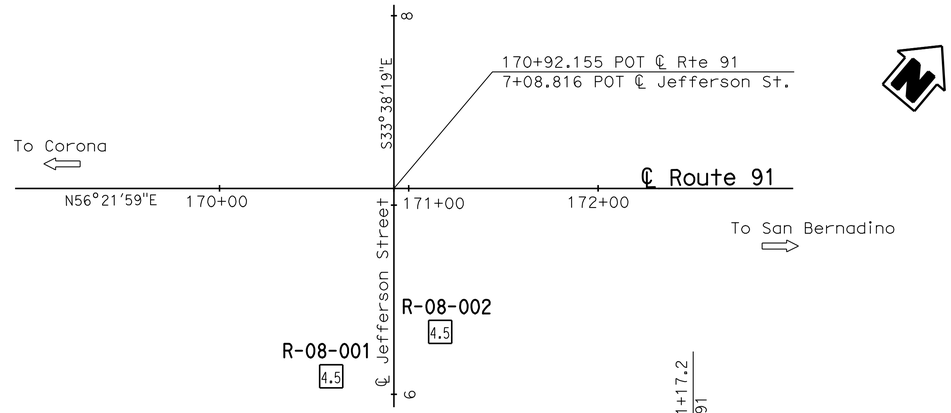

PLAN
1" = 40'

NOTES:

1. Shown are the actual blow counts recorded in the field. Apparent densities of soils shown on the LOTB sheets are based on the corrected SPT N-values for hammer efficiency.
2. A groundwater table measurement was not made at Boring R-08-002 since the bore hole was backfilled immediately after completion of drilling.

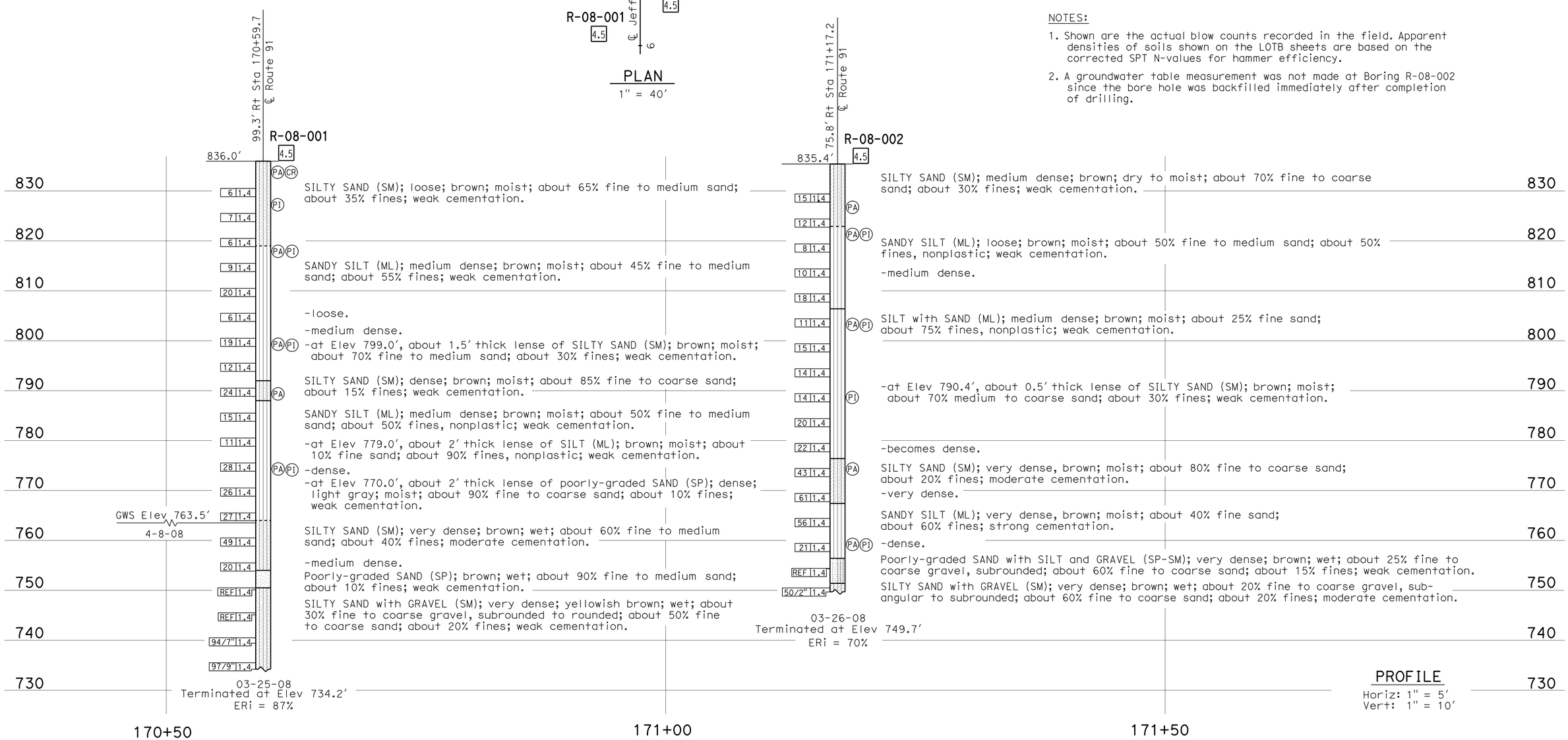

PROFILE
Horiz: 1" = 5'
Vert: 1" = 10'

ENGINEERING SERVICES		GEOTECHNICAL SERVICES	STATE OF CALIFORNIA DEPARTMENT OF TRANSPORTATION	DIVISION OF ENGINEERING SERVICES STRUCTURE DESIGN DESIGN BRANCH 10	BRIDGE NO. 56-0387 POST MILES 16.1	JEFFERSON STREET UC (WIDEN) LOG OF TEST BORINGS 1 OF 3
FUNCTIONAL SUPERVISOR	DRAWN BY: I.G-Remmen, 12/08	FIELD INVESTIGATION BY:				
NAME: M. DeSalvatore	CHECKED BY: J. Klamecki	Y. Yoon				
OGS CIVIL LOG OF TEST BORINGS SHEET	ORIGINAL SCALE IN INCHES FOR REDUCED PLANS 0 1 2 3		CU 08 EA 448401	DISREGARD PRINTS BEARING EARLIER REVISION DATES	REVISION DATES 01-26-09 03-16-10 04-05-10 05-13-10 06-23-10	SHEET 14 OF 16

FILE => 560387zltb14.dgn

USERNAME => trmartin DATE PLOTTED => 30-APR-2011 TIME PLOTTED => 13:35

DIST	COUNTY	ROUTE	POST MILES TOTAL PROJECT	SHEET No	TOTAL SHEETS
08	Riv	91	15.6/21.6	1783	2028

REGISTERED CIVIL ENGINEER 7-14-10

4-25-11
PLANS APPROVAL DATE

REGISTERED PROFESSIONAL ENGINEER Yeo Yoon No. 73532 Exp. 12-31-10 CIVIL STATE OF CALIFORNIA

The State of California or its officers or agents shall not be responsible for the accuracy or completeness of electronic copies of this plan sheet.

REFERENCE: CALTRANS SOIL & ROCK LOGGING, CLASSIFICATION, AND PRESENTATION MANUAL (JUNE 2007)

CEMENTATION

Description	Criteria
Weak	Crumbles or breaks with handling or little finger pressure.
Moderate	Crumbles or breaks with considerable finger pressure.
Strong	Will not crumble or break with finger pressure.

CONSISTENCY OF COHESIVE SOILS

Description	Unconfined Compressive Strength (tsf)	Pocket Penetrometer Measurement (tsf)	Torvane Measurement (tsf)	Field Approximation
Very Soft	< 0.25	< 0.25	< 0.12	Easily penetrated several inches by fist
Soft	0.25 to 0.50	0.25 to 0.50	0.12 to 0.25	Easily penetrated several inches by thumb
Medium Stiff	0.50 to 1.0	0.50 to 1.0	0.25 to 0.50	Penetrated several inches by thumb with moderate effort
Stiff	1 to 2	1 to 2	0.50 to 1.0	Readily indented by thumb but penetrated only with great effort
Very Stiff	2 to 4	2 to 4	1.0 to 2.0	Readily indented by thumbnail
Hard	> 4.0	> 4.0	> 2.0	Indented by thumbnail with difficulty

BOREHOLE IDENTIFICATION

Symbol	Hole Type	Description
Size	A	Auger Boring
Size	R P	Rotary drilled boring Rotary percussion boring (air)
Size	R	Rotary drilled diamond core
Size	HD HA	Hand driven (1-inch soil tube) Hand Auger
●	D	Dynamic Cone Penetration Boring
▲	CPT	Cone Penetration Test (ASTM D 5778-95)
⬚	O	Other

Note: Size in inches.

PLASTICITY OF FINE-GRAINED SOILS

Description	Criteria
Nonplastic	A 1/8-inch thread cannot be rolled at any water content.
Low	The thread can barely be rolled and the lump cannot be formed when drier than the plastic limit.
Medium	The thread is easy to roll and not much time is required to reach the plastic limit. The thread cannot be rerolled after reaching the plastic limit. The lump crumbles when drier than the plastic limit.
High	It takes considerable time rolling and kneading to reach the plastic limit. The thread can be rerolled several times after reaching the plastic limit. The lump can be formed without crumbling when drier than the plastic limit.

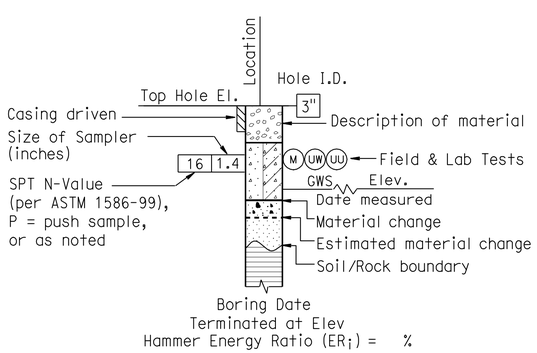

ROTARY BORING

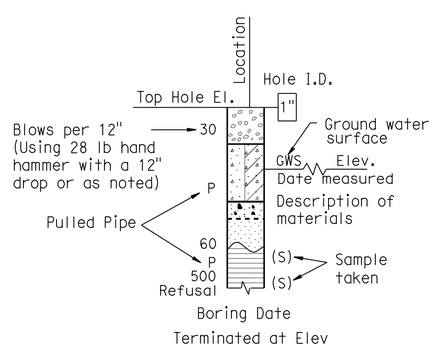

HAND BORING

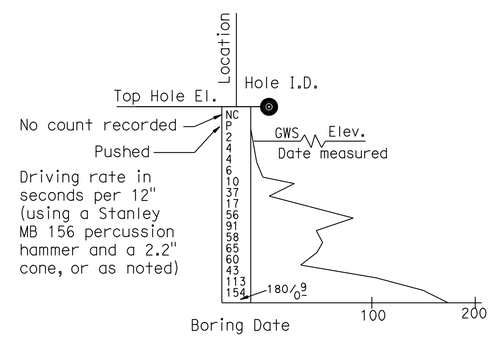

DYNAMIC CONE PENETRATION BORING

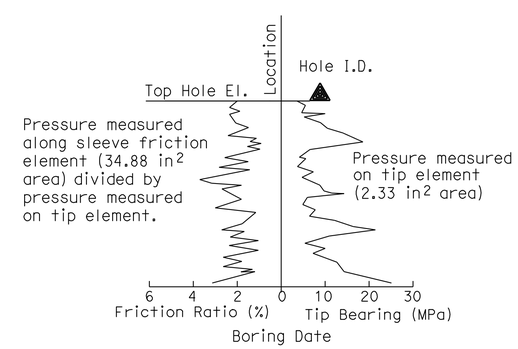

CONE PENETRATION TEST (CPT) SOUNDING

ENGINEERING SERVICES	GEOTECHNICAL SERVICES	STATE OF CALIFORNIA DEPARTMENT OF TRANSPORTATION	DIVISION OF ENGINEERING SERVICES STRUCTURE DESIGN DESIGN BRANCH 10	BRIDGE NO. 56-0387 POST MILE 16.1	JEFFERSON STREET UC (WIDEN) LOG OF TEST BORINGS 2 OF 3
	PREPARED BY: F. Nguyen 03/10				

GS LOTB SOIL LEGEND

ORIGINAL SCALE IN INCHES FOR REDUCED PLANS 0 1 2 3

CU 08
EA 448401

DISREGARD PRINTS BEARING EARLIER REVISION DATES 9-21-10

REVISION DATES

SHEET 15 OF 16

FILE => 560387zltb15.dgn

USERNAME => ttrmartin DATE PLOTTED => 30-APR-2011 TIME PLOTTED => 13:35

REFERENCE: CALTRANS SOIL & ROCK LOGGING, CLASSIFICATION, AND PRESENTATION MANUAL (JUNE 2007)

DIST	COUNTY	ROUTE	POST MILES TOTAL PROJECT	SHEET No	TOTAL SHEETS
08	Riv	91	15.6/21.6	1784	2028

REGISTERED CIVIL ENGINEER 7-14-10

4-25-11
PLANS APPROVAL DATE

REGISTERED PROFESSIONAL ENGINEER Yeo Yoon No. 73532 Exp. 12-31-10 CIVIL STATE OF CALIFORNIA

The State of California or its officers or agents shall not be responsible for the accuracy or completeness of electronic copies of this plan sheet.

GROUP SYMBOLS AND NAMES

Graphic/Symbol	Group Names	Graphic/Symbol	Group Names
GW	Well-graded GRAVEL Well-graded GRAVEL with SAND	CL	Lean CLAY Lean CLAY with SAND Lean CLAY with GRAVEL SANDY lean CLAY SANDY lean CLAY with GRAVEL GRAVELLY lean CLAY GRAVELLY lean CLAY with SAND
GP	Poorly graded GRAVEL Poorly graded GRAVEL with SAND		
GW-GM	Well-graded GRAVEL with SILT Well-graded GRAVEL with SILT and SAND	CL-ML	SILTY CLAY SILTY CLAY with SAND SILTY CLAY with GRAVEL SANDY SILTY CLAY SANDY SILTY CLAY with GRAVEL GRAVELLY SILTY CLAY GRAVELLY SILTY CLAY with SAND
GW-GC	Well-graded GRAVEL with CLAY (or SILTY CLAY) Well-graded GRAVEL with CLAY and SAND (or SILTY CLAY and SAND)		
GP-GM	Poorly graded GRAVEL with SILT Poorly graded GRAVEL with SILT and SAND	ML	SILT SILT with SAND SILT with GRAVEL SANDY SILT SANDY SILT with GRAVEL GRAVELLY SILT GRAVELLY SILT with SAND
GP-GC	Poorly graded GRAVEL with CLAY (or SILTY CLAY) Poorly graded GRAVEL with CLAY and SAND (or SILTY CLAY and SAND)		
GM	SILTY GRAVEL SILTY GRAVEL with SAND	OL	ORGANIC lean CLAY ORGANIC lean CLAY with SAND ORGANIC lean CLAY with GRAVEL SANDY ORGANIC lean CLAY SANDY ORGANIC lean CLAY with GRAVEL GRAVELLY ORGANIC lean CLAY GRAVELLY ORGANIC lean CLAY with SAND
GC	CLAYEY GRAVEL CLAYEY GRAVEL with SAND		
GC-GM	SILTY, CLAYEY GRAVEL SILTY, CLAYEY GRAVEL with SAND	OL	ORGANIC SILT ORGANIC SILT with SAND ORGANIC SILT with GRAVEL SANDY ORGANIC SILT SANDY ORGANIC SILT with GRAVEL GRAVELLY ORGANIC SILT GRAVELLY ORGANIC SILT with SAND
SW	Well-graded SAND Well-graded SAND with GRAVEL		
SP	Poorly graded SAND Poorly graded SAND with GRAVEL	CH	Fat CLAY Fat CLAY with SAND Fat CLAY with GRAVEL SANDY fat CLAY SANDY fat CLAY with GRAVEL GRAVELLY fat CLAY GRAVELLY fat CLAY with SAND
SW-SM	Well-graded SAND with SILT Well-graded SAND with SILT and GRAVEL		
SW-SC	Well-graded SAND with CLAY (or SILTY CLAY) Well-graded SAND with CLAY and GRAVEL (or SILTY CLAY and GRAVEL)	MH	Elastic SILT Elastic SILT with SAND Elastic SILT with GRAVEL SANDY elastic SILT SANDY elastic SILT with GRAVEL GRAVELLY elastic SILT GRAVELLY elastic SILT with SAND
SP-SM	Poorly graded SAND with SILT Poorly graded SAND with SILT and GRAVEL		
SP-SC	Poorly graded SAND with CLAY (or SILTY CLAY) Poorly graded SAND with CLAY and GRAVEL (or SILTY CLAY and GRAVEL)	OH	ORGANIC fat CLAY ORGANIC fat CLAY with SAND ORGANIC fat CLAY with GRAVEL SANDY ORGANIC fat CLAY SANDY ORGANIC fat CLAY with GRAVEL GRAVELLY ORGANIC fat CLAY GRAVELLY ORGANIC fat CLAY with SAND
SM	SILTY SAND SILTY SAND with GRAVEL		
SC	CLAYEY SAND CLAYEY SAND with GRAVEL	OH	ORGANIC elastic SILT ORGANIC elastic SILT with SAND ORGANIC elastic SILT with GRAVEL SANDY ORGANIC elastic SILT SANDY ORGANIC elastic SILT with GRAVEL GRAVELLY ORGANIC elastic SILT GRAVELLY ORGANIC elastic SILT with SAND
SC-SM	SILTY, CLAYEY SAND SILTY, CLAYEY SAND with GRAVEL		
PT	PEAT	OL/OH	ORGANIC SOIL ORGANIC SOIL with SAND ORGANIC SOIL with GRAVEL SANDY ORGANIC SOIL SANDY ORGANIC SOIL with GRAVEL GRAVELLY ORGANIC SOIL GRAVELLY ORGANIC SOIL with SAND
	COBBLES COBBLES and BOULDERS BOULDERS		

FIELD AND LABORATORY TESTING

- (C) Consolidation (ASTM D 2435)
- (CL) Collapse Potential (ASTM D 5333)
- (CP) Compaction Curve (CTM 216)
- (CR) Corrosivity Testing (CTM 643, CTM 422, CTM 417)
- (CU) Consolidated Undrained Triaxial (ASTM D 4767)
- (DS) Direct Shear (ASTM D 3080)
- (EI) Expansion Index (ASTM D 4829)
- (M) Moisture Content (ASTM D 2216)
- (OC) Organic Content-% (ASTM D 2974)
- (P) Permeability (CTM 220)
- (PA) Particle Size Analysis (ASTM D 422)
- (PI) Plasticity Index (AASHTO T 90) Liquid Limit (AASHTO T 89)
- (PL) Point Load Index (ASTM D 5731)
- (PM) Pressure Meter
- (PP) Pocket Penetrometer
- (R) R-Value (CTM 301)
- (SE) Sand Equivalent (CTM 217)
- (SG) Specific Gravity (AASHTO T 100)
- (SL) Shrinkage Limit (ASTM D 427)
- (SW) Swell Potential (ASTM D 4546)
- (TV) Pocket Torvane
- (UC) Unconfined Compression-Soil (ASTM D 2166) Unconfined Compression-Rock (ASTM D 2938)
- (UU) Unconsolidated Undrained Triaxial (ASTM D 2850)
- (UW) Unit Weight (ASTM D 4767)
- (VS) Vane Shear (AASHTO T 223)

APPARENT DENSITY OF COHESIONLESS SOILS

Description	SPT N_{60} (Blows / 12 inches)
Very loose	0 - 4
Loose	5 - 10
Medium Dense	11 - 30
Dense	31 - 50
Very Dense	> 50

MOISTURE

Description	Criteria
Dry	Absence of moisture, dusty, dry to the touch
Moist	Damp but no visible water
Wet	Visible free water, usually soil is below water table

PERCENT OR PROPORTION OF SOILS

Description	Criteria
Trace	Particles are present but estimated to be less than 5%
Few	5 to 10%
Little	15 to 25%
Some	30 to 45%
Mostly	50 to 100%

PARTICLE SIZE

Description		Size
Boulder		> 12"
Cobble		3" to 12"
Gravel	Coarse	3/4" to 3"
	Fine	No. 4 to 3/4"
Sand	Coarse	No. 10 to No. 4
	Medium	No. 40 to No. 10
	Fine	No. 200 to No. 40

ENGINEERING SERVICES

GEOTECHNICAL SERVICES
PREPARED BY: F. Nguyen 03/10

STATE OF CALIFORNIA DEPARTMENT OF TRANSPORTATION

DIVISION OF ENGINEERING SERVICES STRUCTURE DESIGN
DESIGN BRANCH 10

BRIDGE NO. 56-0387
POST MILE 16.1

JEFFERSON STREET UC (WIDEN)
LOG OF TEST BORINGS 3 OF 3

GS LOTB SOIL LEGEND

ORIGINAL SCALE IN INCHES FOR REDUCED PLANS 0 1 2 3

CU 08
EA 448401

DISREGARD PRINTS BEARING EARLIER REVISION DATES 9-21-10

REVISION DATES

SHEET 16 OF 16

FILE => 560387zltb16.dgn

USERNAME => trmartin DATE PLOTTED => 30-APR-2011 TIME PLOTTED => 13:35

DIST	COUNTY	ROUTE	POST MILES TOTAL PROJECT	SHEET No	TOTAL SHEETS
08	Riv	91	15.6/21.6	1785	2028

REGISTERED CIVIL ENGINEER — DATE 11-30-10

4-25-11
PLANS APPROVAL DATE

REGISTERED PROFESSIONAL ENGINEER — HUAN D. VU — No. C60696 — Exp. 12-31-10 — CIVIL — STATE OF CALIFORNIA

The State of California or its officers or agents shall not be responsible for the accuracy or completeness of electronic copies of this plan sheet.

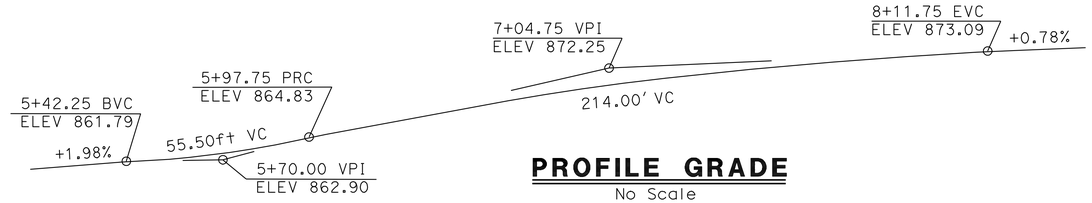

PROFILE GRADE
No Scale

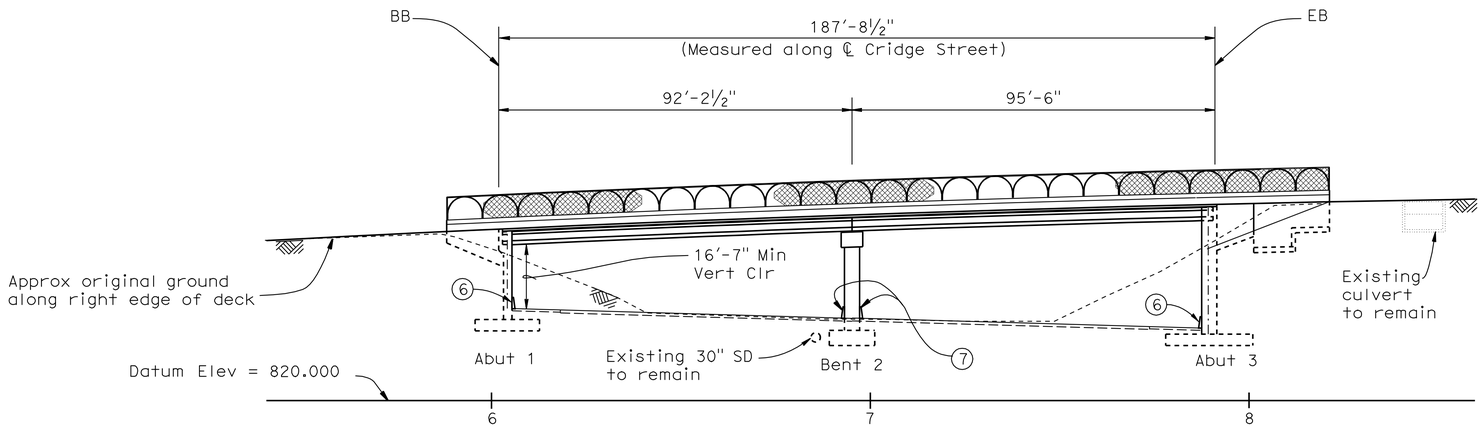

ELEVATION
1"=20'

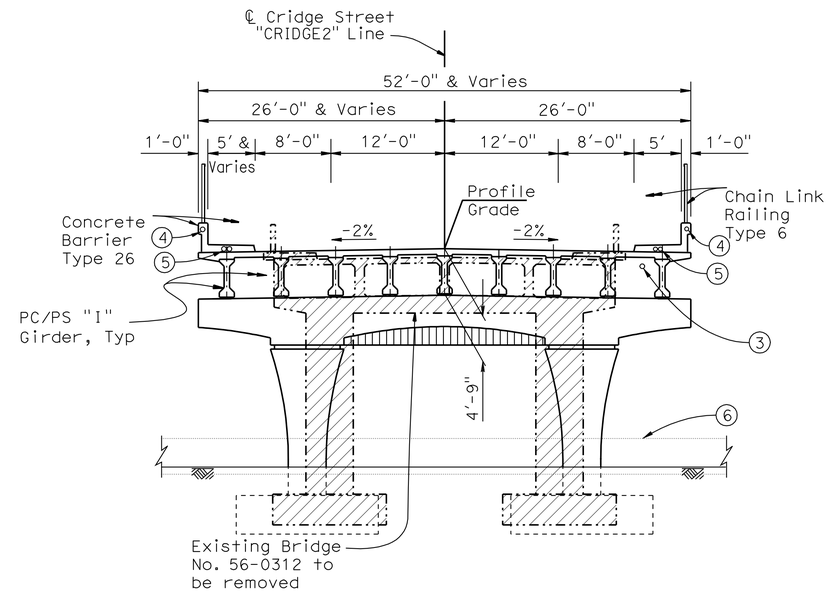

TYPICAL SECTION
⅛"=1'

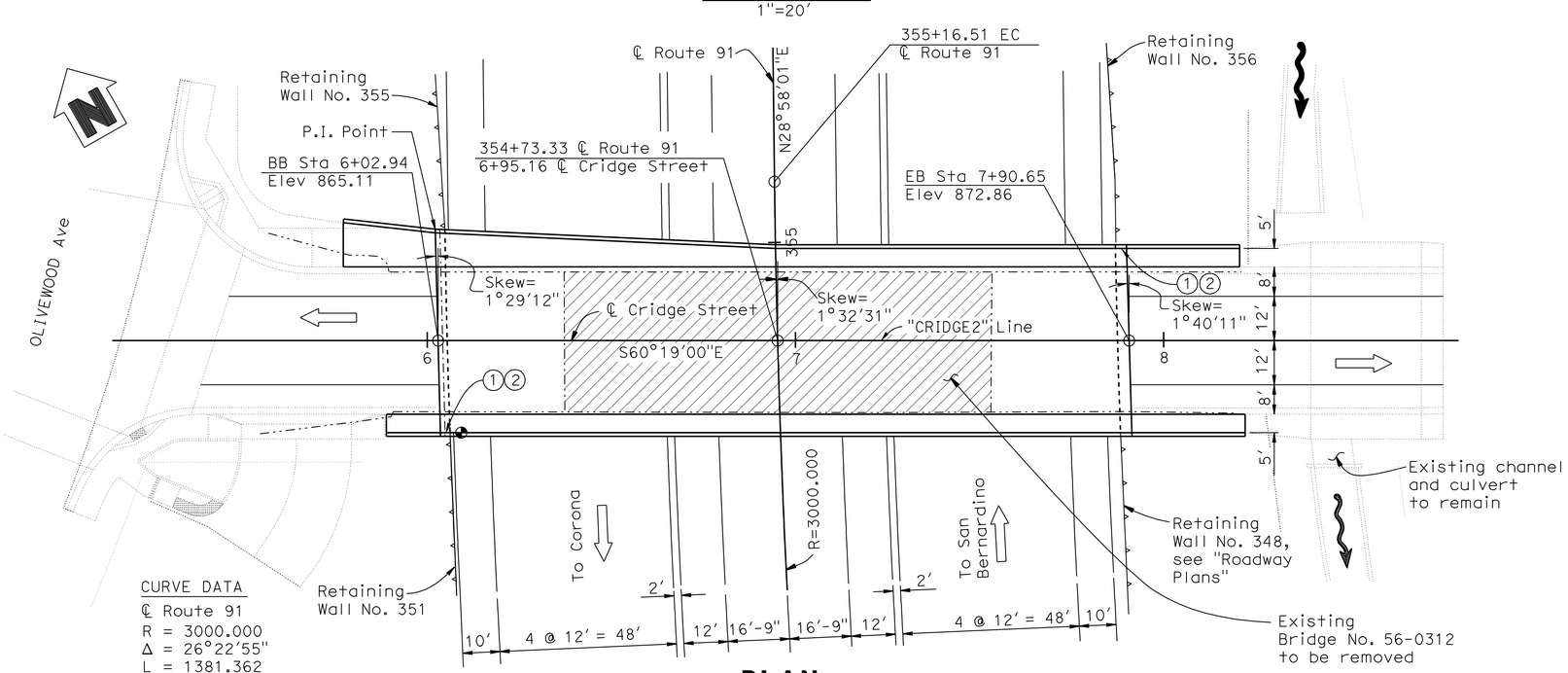

CURVE DATA
℄ Route 91
R = 3000.000
Δ = 26°22'55"
L = 1381.362
T = 703.150

PLAN
1"=20'

NOTES:

1. Paint "BR. NO. 56-0835"
2. Paint "CRIDGE STREET OC"
3. 3" ø irrigation line, see "Roadway Plans".
4. 3-2" ø electrical conduits, see "Roadway Plans".
5. 4-2" ø electrical conduits, see "Roadway Plans".
6. Concrete Barrier Type 60D (Mod)
7. Concrete Barrier Type 60E, see "Roadway Plans".

LEGEND

- Indicates existing structure
- Indicates new structure
- Indicates direction of traffic flow
- Indicates point of minimum vertical clearance
- Indicates flow direction
- Indicates bridge removal

For "Index to Plans", "General Notes", "Standard Plans", and "Quantities", see "INDEX TO PLANS" sheet.

DANIEL T. ADAMS
DESIGN ENGINEER

	BY	CHECKED
DESIGN	M. Vo	J. Delgado
DETAILS	Y. Tang	J. Delgado
QUANTITIES	A. McPhee	J. Szabo

LOAD & RESISTANCE FACTOR DESIGN — LIVE LOADING: HL93 W/"LOW-BOY"; PERMIT DESIGN VEHICLE
LAYOUT — BY H. Vu — CHECKED M. Vo
SPECIFICATIONS — BY D. Klein — PLANS AND SPECS COMPARED D. Klein

ORIGINAL SCALE IN INCHES FOR REDUCED PLANS 0 1 2 3

STATE OF CALIFORNIA
DEPARTMENT OF TRANSPORTATION

DIVISION OF ENGINEERING SERVICES
STRUCTURE DESIGN
DESIGN BRANCH 10

CU 08
EA 448401

BRIDGE NO. 56-0835
POST MILE 19.62

CRIDGE STREET OC (REPLACE)
GENERAL PLAN

DISREGARD PRINTS BEARING EARLIER REVISION DATES

REVISION DATES: 4-25-08 | 8-04-10 | 9-23-10 | 9-26-08 | 10-14-08 | 6-19-09 | 2-11-10 | 4-28-10 | 8-09-10

SHEET 1 OF 31

STRUCTURES DESIGN GENERAL PLAN SHEET (ENGLISH) (REV.07-24-06)

FILE => 560835agp01.dgn

USERNAME => trmartin DATE PLOTTED => 30-APR-2011 TIME PLOTTED => 13:36

DIST	COUNTY	ROUTE	POST MILES TOTAL PROJECT	SHEET No	TOTAL SHEETS
08	Riv	91	15.6/21.6	1786	2028

REGISTERED CIVIL ENGINEER 11-30-10 DATE

4-25-11
PLANS APPROVAL DATE

REGISTERED PROFESSIONAL ENGINEER HUAN VU No. 60696 Exp. 12-31-10 CIVIL STATE OF CALIFORNIA

The State of California or its officers or agents shall not be responsible for the accuracy or completeness of electronic copies of this plan sheet.

INDEX TO PLANS

SHEET NO.	TITLE
1.	GENERAL PLAN
2.	INDEX TO PLANS
3.	DECK CONTOURS
4.	FOUNDATION PLAN
5.	ABUTMENT 1 LAYOUT
6.	ABUTMENT 3 LAYOUT
7.	ABUTMENT DETAILS No.1
8.	ABUTMENT DETAILS No.2
9.	ABUTMENT DETAILS No.3
10.	ABUTMENT DETAILS No.4
11.	BENT LAYOUT
12.	BENT DETAILS NO.1
13.	BENT DETAILS NO.2
14.	BENT DETAILS NO.3
15.	TYPICAL SECTION
16.	GIRDER LAYOUT
17.	PRECAST PRESTRESSED I GIRDER (LFRD)
18.	GIRDER REINFORCEMENT
19.	ARCHITECTURAL DETAILS NO. 1
20.	ARCHITECTURAL DETAILS NO. 2
21.	ARCHITECTURAL DETAILS NO. 3
22.	ARCHITECTURAL DETAILS NO. 4
23.	CHAIN LINK RAILING TYPE 6
24.	LOG OF TEST BORINGS 1 OF 8
25.	LOG OF TEST BORINGS 2 OF 8
26.	LOG OF TEST BORINGS 3 OF 8
27.	LOG OF TEST BORINGS 4 OF 8
28.	LOG OF TEST BORINGS 5 OF 8
29.	LOG OF TEST BORINGS 6 OF 8
30.	LOG OF TEST BORINGS 7 OF 8
31.	LOG OF TEST BORINGS 8 OF 8

STANDARD PLANS DATED MAY 2006

A10A	ACRONYMS AND ABBREVIATIONS (SHEET 1 OF 2)
A10B	ACRONYMS AND ABBREVIATIONS (SHEET 2 OF 2)
A10C	SYMBOLS (SHEET 1 OF 2)
A10D	SYMBOLS (SHEET 2 OF 2)
A76A	CONCRETE BARRIER TYPE 60
B3-1	RETAINING WALL TYPE 1 H=4' THROUGH 30'
B3-8	RETAINING WALL DETAILS NO. 1
BO-1	BRIDGE DETAILS
BO-3	BRIDGE DETAILS
BO-5	BRIDGE DETAILS
BO-13	BRIDGE DETAILS
A62C	LIMITS OF PAYMENT FOR EXCAVATION AND BACKFILL-BRIDGE
B6-10	UTILITY OPENINGS T-BEAM
RSP B6-21	JOINT SEALS (MAXIMUM MOVEMENT RATING = 2")
B11-54	CONCRETE BARRIER TYPE 26
B14-4	
B14-5	

STANDARD PLAN SHEET NO.

DETAIL NO.

SPREAD FOOTING DATA TABLE

SUPPORT LOCATION	WORKING STRESS DESIGN (WSD)		LOAD AND RESISTANCE FACTOR DESIGN (LRFD)		
				STRENGTH	EXTREME EVENT
	PERMISSIBLE GROSS CONTACT STRESS (SETTLEMENT) (ksf)	ALLOWABLE GROSS BEARING CAPACITY (ksf)	PERMISSIBLE NET CONTACT STRESS (SETTLEMENT) (ksf)	FACTORED GROSS NOMINAL BEARING RESISTANCE φ_{bs} 0.45 (ksf)	FACTORED GROSS NOMINAL BEARING RESISTANCE φ_{b} = 1.00 (ksf)
Abut 1	6.3	13.1	N/A	N/A	N/A
Bent 2	N/A	N/A	10.9	19.2	42.8
Abut 3	5.6	16.1	N/A	N/A	N/A

GENERAL NOTES
LOAD AND RESISTANCE FACTOR DESIGN

DESIGN: AASHTO LRFD BRIDGE DESIGN SPECIFICATIONS, 4rd Edition and the CALTRANS Amendments preface dated Dec. 2008.

SEISMIC DESIGN: Caltrans Seismic Design Criteria (SDC) Version 1.4, July, 2006

DEAD LOAD: Includes 35 Psf for future wearing surface. Includes 10% of the additional deck dead load between girders for stay in place deck form.

LIVE LOADING: HL93 with alternative and permit design load.

SEISMIC LOADING: Peak Rock Acceleration = 0.4 g. Site specific ARS as shown

Recommended Acceleration Response Spectrum
for the Cridge Street Overcrossing (Bridge # 56-0835)

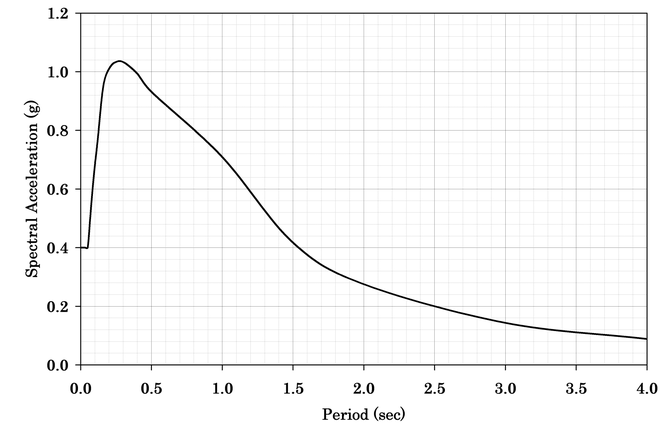

Modified CALTRANS SDC ARS Curve:
Type C Soil Profile, Magnitude Mw=7.5, 5% Damping

ARS CURVE

REINFORCED CONCRETE: f_y = 60 ksi
f'_c = 3600 psi, unless otherwise noted
n = 8

PRESTRESSED CONCRETE: See "Prestressing Notes" on "PRECAST PRESTRESSED I GIRDER (LFRD)" sheet.

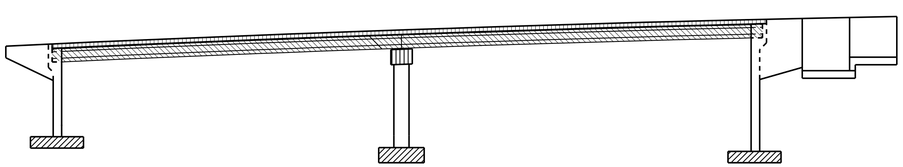

Precast Prestressed I- Girders
Structural Concrete, Bridge
Structural Concrete, Bridge Footing
Structural Concrete, Bridge (4000 psi @ 28 days)

CONCRETE STRENGTH AND TYPE LIMITS

No Scale

QUANTITIES

BRIDGE REMOVAL, LOCATION H	LUMP	SUM
STRUCTURE EXCAVATION (BRIDGE)	1,996	CY
STRUCTURE BACKFILL (BRIDGE)	1,452	CY
PERVIOUS BACKFILL MATERIAL	99	CY
3" SUPPLY LINE (BRIDGE)	188	LF
TIEDOWN ANCHOR	16	EA
STRUCTURAL CONCRETE, BRIDGE FOOTING	294	CY
STRUCTURAL CONCRETE, BRIDGE	740	CY
ARCHITECTURAL SURFACE(TEXTURED CONCRETE) FRACTURED RIB TEXTURE	152	SQFT
ARCHITECTURAL SURFACE(TEXTURED CONCRETE) FRACTURED RIB SPLIT SLATE TEXTURE	2,772	SQFT
FURNISH PRECAST PRESTRESSED CONCRETE GIRDER (90'-100')	18	EA
ERECT PRECAST PRESTRESSED CONCRETE GIRDER	18	EA
JOINT SEAL (MR 1")	108	LF
BAR REINFORCING STEEL (BRIDGE)	226,210	LB
CHAIN LINK RAILING (TYPE 6)	481	LF
CONCRETE BARRIER (TYPE 26)	481	LF
CONCRETE BARRIER (TYPE 60D MODIFIED)	110	LF

DESIGN	BY M. Vo	CHECKED J. Delgado	
DETAILS	BY D. Wooten	CHECKED J. Delgado	
QUANTITIES	BY A. McPhee	CHECKED J. Szabo	

STATE OF CALIFORNIA
DEPARTMENT OF TRANSPORTATION

DIVISION OF ENGINEERING SERVICES
STRUCTURE DESIGN
DESIGN BRANCH 10

BRIDGE NO. 56-0835
POST MILE 19.62

CRIDGE STREET OC (REPLACE)
INDEX TO PLANS

STRUCTURES DESIGN DETAIL SHEET (ENGLISH) (REV. 10/25/05)

ORIGINAL SCALE IN INCHES FOR REDUCED PLANS 0 1 2 3

CU 08
EA 448401

DISREGARD PRINTS BEARING EARLIER REVISION DATES

REVISION DATES: 6-19-09 2-11-10 7-28-10 8-05-10 8-19-10

SHEET 2 OF 31

FILE => 560835aitp02.dgn

USERNAME => trmartin DATE PLOTTED => 30-APR-2011 TIME PLOTTED => 13:36

DIST	COUNTY	ROUTE	POST MILES TOTAL PROJECT	SHEET No	TOTAL SHEETS
08	Riv	91	15.6/21.6	1787	2028

REGISTERED CIVIL ENGINEER 11-30-10 DATE

4-25-11
PLANS APPROVAL DATE

REGISTERED PROFESSIONAL ENGINEER HUAN VU No. 60696 Exp. 12-31-10 CIVIL STATE OF CALIFORNIA

The State of California or its officers or agents shall not be responsible for the accuracy or completeness of electronic copies of this plan sheet.

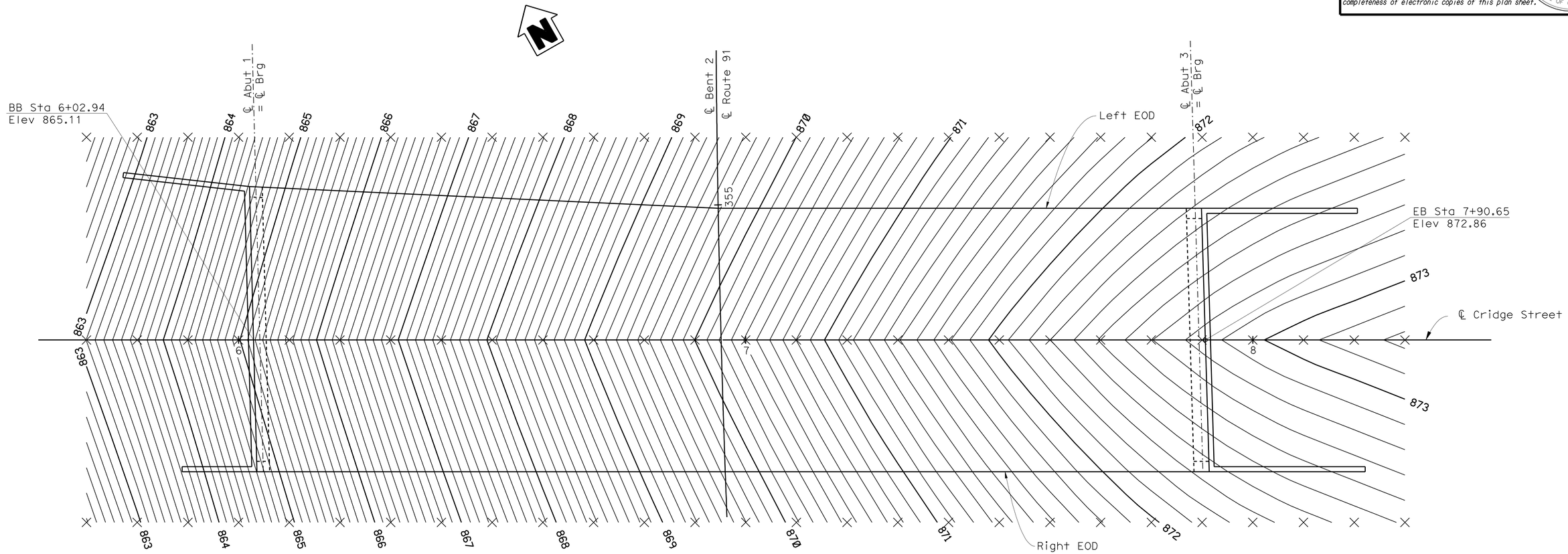

PLAN-DECK CONTOURS

1"=10'-0"

NOTES:

1. X - 10' intervals along station line.
2. Contour interval = 0.1'.
3. Contours do not include camber.

DESIGN	BY M. Vo	CHECKED J. Delgado	
DETAILS	BY G. Hallstrom	CHECKED J. Delgado	
QUANTITIES	BY A. McPhee	CHECKED J. Szabo	

STATE OF CALIFORNIA
DEPARTMENT OF TRANSPORTATION

DIVISION OF ENGINEERING SERVICES
STRUCTURE DESIGN
DESIGN BRANCH 10

BRIDGE NO. 56-0835
POST MILE 19.62

CRIDGE STREET OC (REPLACE)
DECK CONTOURS

STRUCTURES DESIGN DETAIL SHEET (ENGLISH) (REV. 10/25/05)

ORIGINAL SCALE IN INCHES FOR REDUCED PLANS 0 1 2 3

CU 08
EA 448401

DISREGARD PRINTS BEARING EARLIER REVISION DATES 4-23-10

REVISION DATES

SHEET 3 OF 31

FILE => 560835ddc03.dgn

USERNAME => trmartin DATE PLOTTED => 30-APR-2011 TIME PLOTTED => 13:36

DIST	COUNTY	ROUTE	POST MILES TOTAL PROJECT	SHEET No	TOTAL SHEETS
08	Riv	91	15.6/21.6	1788	2028

REGISTERED CIVIL ENGINEER 11-30-10 DATE

4-25-11
PLANS APPROVAL DATE

REGISTERED PROFESSIONAL ENGINEER HUAN VU No. 60696 Exp. 12-31-10 CIVIL STATE OF CALIFORNIA

The State of California or its officers or agents shall not be responsible for the accuracy or completeness of electronic copies of this plan sheet.

CURVE DATA				
No.	R	Δ	T	L
5	3000.00	26°22′55"	703.15	1381.36
6	2907.62	11°21′38"	289.21	576.52
7	3089.79	07°39′58"	207.02	413.41

BRIDGE No. 56-0312 LOCATION:
1 - 55.56 Lt. ℄, Sta.322+04.90, Elev.= 864.88 ±
2 - 56.34 Lt. ℄, Sta.321+77.81, Elev.= 864.86 ±
3 - 56.43 Rt. ℄, Sta.322+02.51, Elev.= 869.28 ±
4 - 55.54 Rt. ℄, Sta.321+74.16, Elev.= 869.31 ±

A STA. 6+95.16 "CRIDGE2" LINE =
STA. 354+73.33 ℄ RTE 91 "GE1" LINE

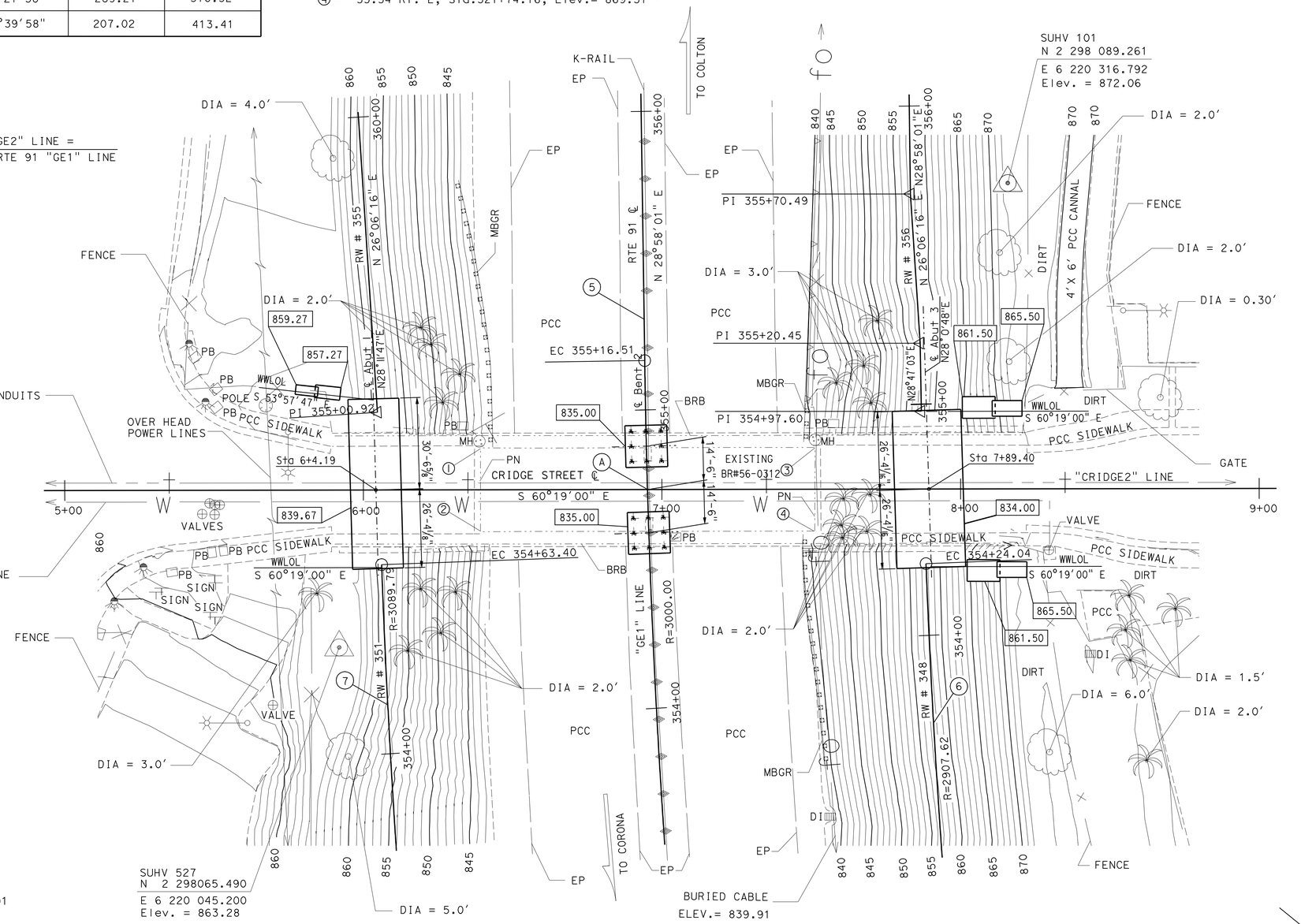

SURVEY CONTROL

SUHV 101
Fnd 2X2 / TAG EB 91 TOS
122.42 Rt. ℄ Rte 91
Sta. 322+90.81
N 2 298 089.261
E 6 220 316.792
Elev. = 872.06

SUHV 527
Fnd 1"IP/ALUM CAP/WB RTE91
105.13 Lt. ℄ Rte 91
Sta. 321+41.67
N 2 298065.490
E 6 220 045.200
Elev. = 863.28

Note:
Indicates bottom of footing elevation

PRELIMINARY INVESTIGATION SECTION									
SCALE 1:20	VERT.DATUM NAVD 88	PHOTOGRAMMETRY AS OF: X				DESIGN	BY M. Vo	CHECKED J. Delgado	
	HORZ.DATUM NAD 83(1991.35)	SURVEYED	BY T.PHUNG 06/08	CHECKED	BY C.STEWART 06/08	DETAILS	BY G. Hallstrom	CHECKED J. Delgado	
ALIGNMENT TIES X		DRAFTED	BY S.ABASSY 10/08	CHECKED	BY L.MANABO 10/08	QUANTITIES	BY A. McPhee	CHECKED J. Szabo	

STRUCTURES FOUNDATION PLAN SHEET (ENGLISH) (REV. 10/25/05)

ORIGINAL SCALE IN INCHES FOR REDUCED PLANS 0 1 2 3

STATE OF CALIFORNIA
DEPARTMENT OF TRANSPORTATION

DIVISION OF ENGINEERING SERVICES
STRUCTURE DESIGN
DESIGN BRANCH 10

CU 08
EA 448401

BRIDGE NO. 56-0835
POST MILE 19.62

CRIDGE STREET OC (REPLACE)
FOUNDATION PLAN

DISREGARD PRINTS BEARING EARLIER REVISION DATES
REVISION DATES 10/29/08 6/19/09 2/24/10 4/30/10

SHEET 4 OF 31

FILE => 560835efp04.dgn

USERNAME => trmartin DATE PLOTTED => 30-APR-2011 TIME PLOTTED => 13:36

DIST	COUNTY	ROUTE	POST MILES TOTAL PROJECT	SHEET No	TOTAL SHEETS
08	Riv	91	15.6/21.6	1789	2028

REGISTERED CIVIL ENGINEER 11-30-10 DATE

4-25-11
PLANS APPROVAL DATE

The State of California or its officers or agents shall not be responsible for the accuracy or completeness of electronic copies of this plan sheet.

REGISTERED PROFESSIONAL ENGINEER HUAN VU No. 60696 Exp. 12-31-10 CIVIL STATE OF CALIFORNIA

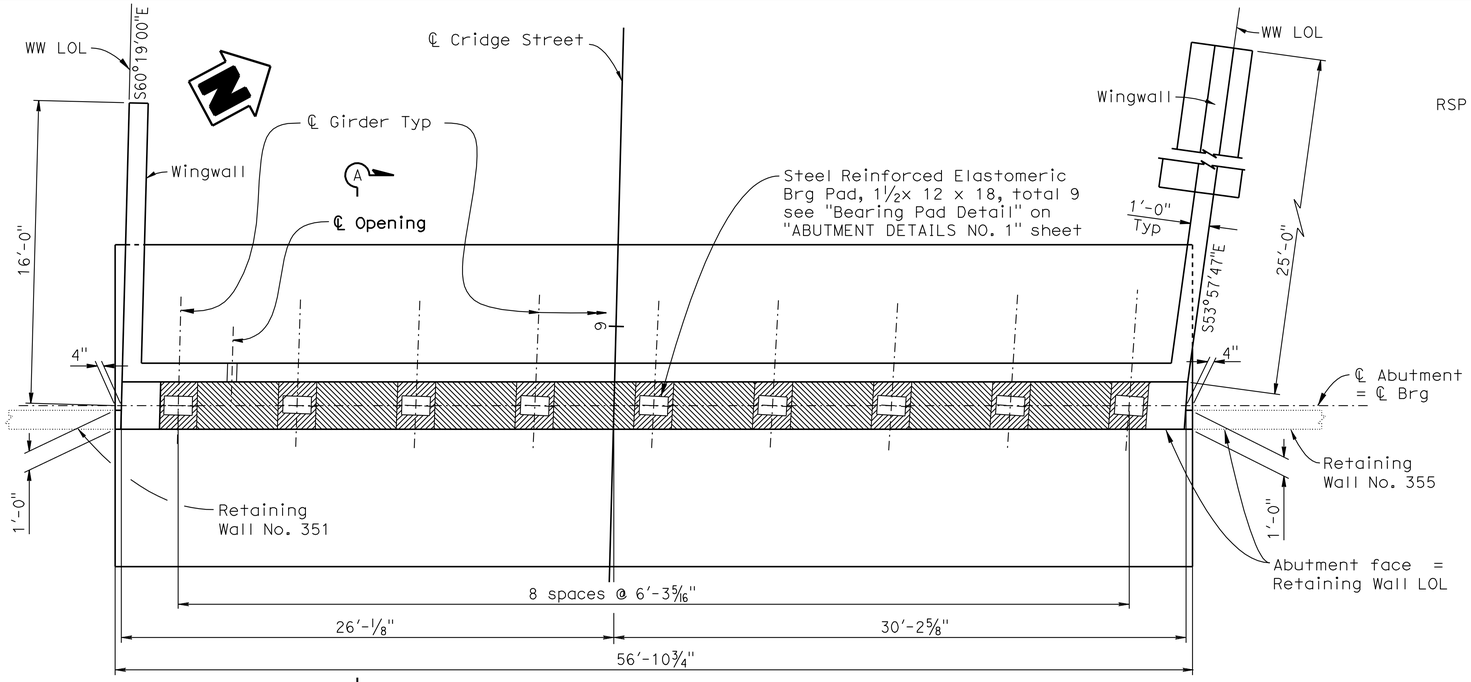

ABUTMENT PLAN

¼"=1'-0"

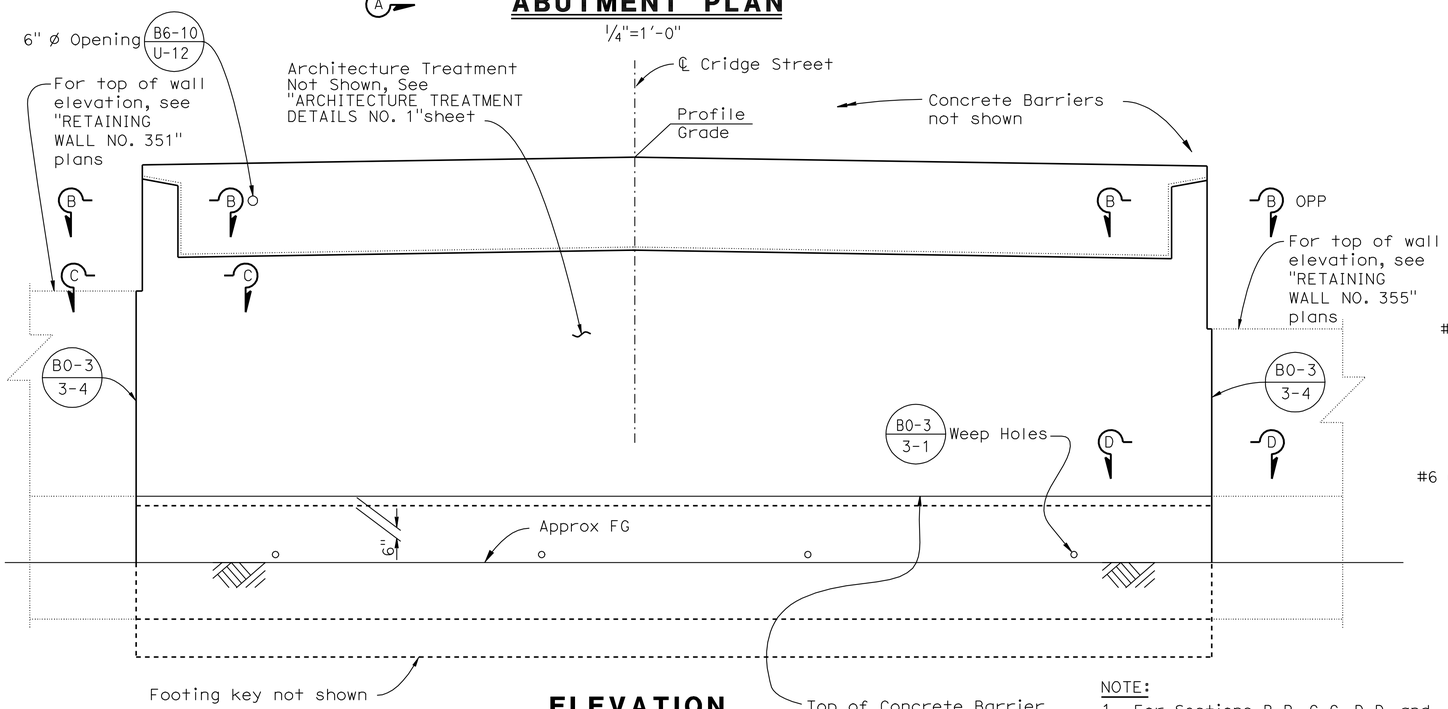

ELEVATION

¼" = 1'-0"

NOTE:

1. For Sections B-B, C-C, D-D, and Detail "A", see "ABUTMENT DETAILS NO. 1" sheet.

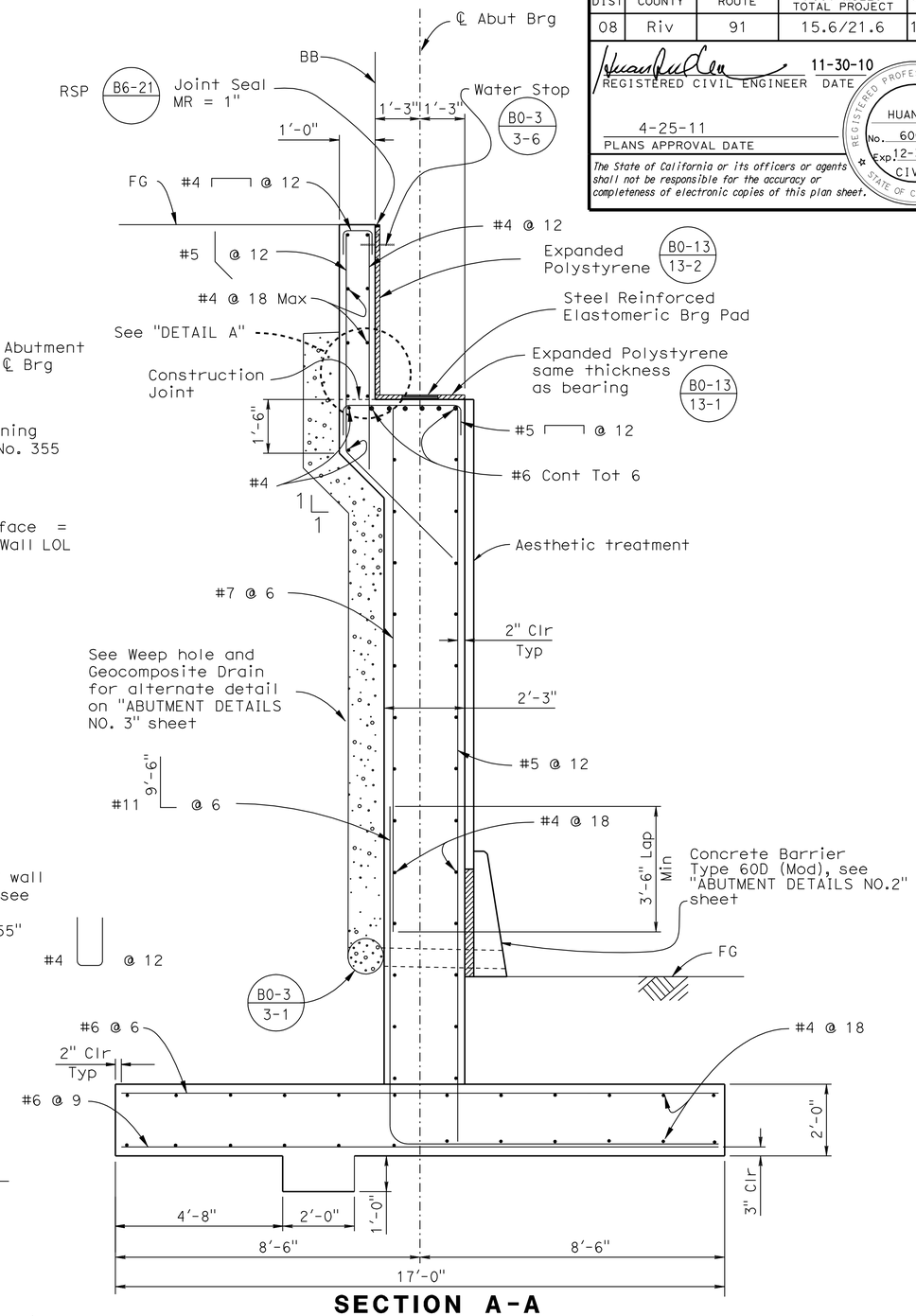

SECTION A-A

½" = 1'-0"

DESIGN	BY M. Vo	CHECKED J. Delgado	
DETAILS	BY D. Wooten/G. Hallstrom	CHECKED J. Delgado	
QUANTITIES	BY A. McPhee	CHECKED J. Szabo	

STATE OF CALIFORNIA
DEPARTMENT OF TRANSPORTATION

DIVISION OF ENGINEERING SERVICES
STRUCTURE DESIGN
DESIGN BRANCH 10

BRIDGE NO. 56-0835
POST MILE 19.62

CRIDGE STREET OC (REPLACE)
ABUTMENT 1 LAYOUT

STRUCTURES DESIGN DETAIL SHEET (ENGLISH) (REV. 10/25/05)

ORIGINAL SCALE IN INCHES FOR REDUCED PLANS 0 1 2 3

CU 08
EA 448401

DISREGARD PRINTS BEARING EARLIER REVISION DATES

REVISION DATES: 6-19-09 2-16-10 4-30-10 7-29-10 9-29-10 10-29-10

SHEET 5 OF 31

FILE => 560835fa11o05.dgn

USERNAME => rmartin DATE PLOTTED => 30-APR-2011 TIME PLOTTED => 13:37

DIST	COUNTY	ROUTE	POST MILES TOTAL PROJECT	SHEET No	TOTAL SHEETS
08	Riv	91	15.6/21.6	1790	2028

REGISTERED CIVIL ENGINEER 11-30-10 DATE

4-25-11
PLANS APPROVAL DATE

The State of California or its officers or agents shall not be responsible for the accuracy or completeness of electronic copies of this plan sheet.

REGISTERED PROFESSIONAL ENGINEER HUAN VU No. 60696 Exp. 12-31-10 CIVIL STATE OF CALIFORNIA

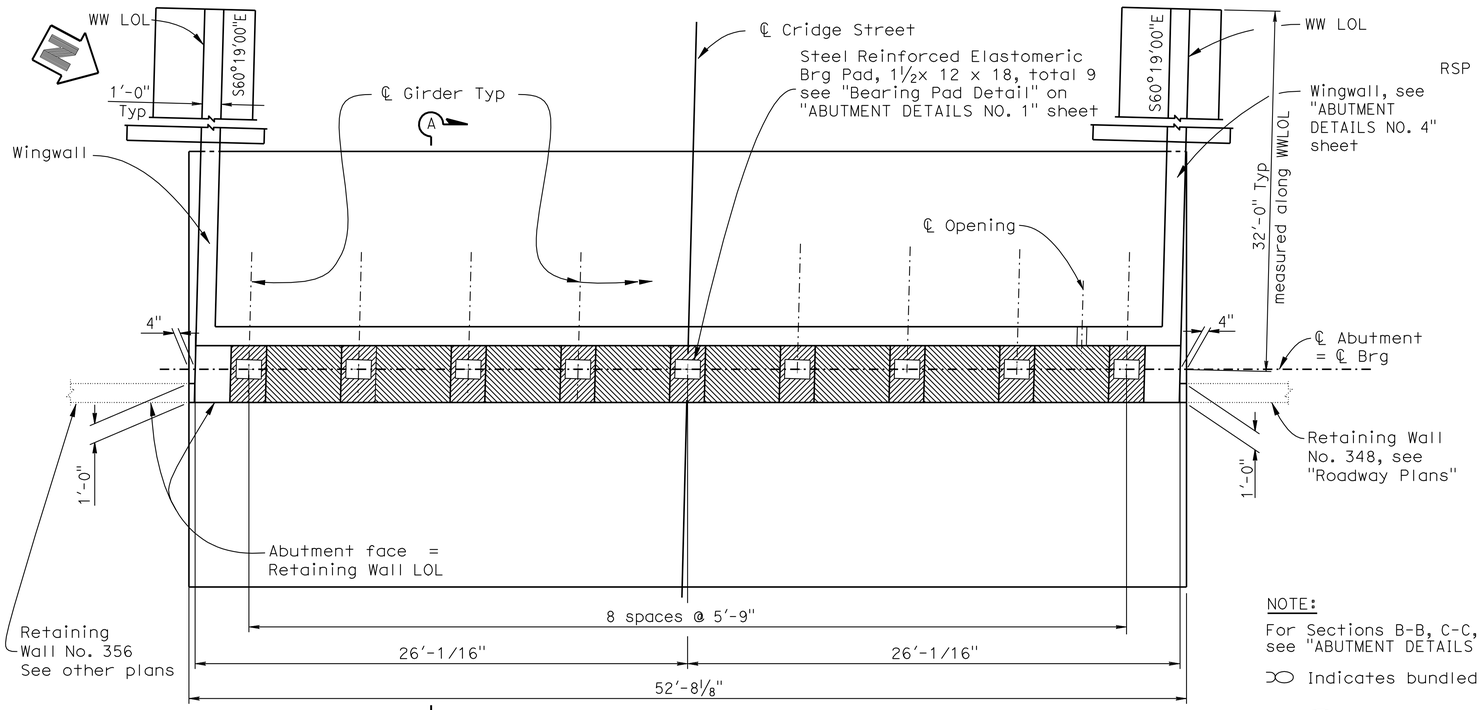

ABUTMENT PLAN

¼"=1'-0"

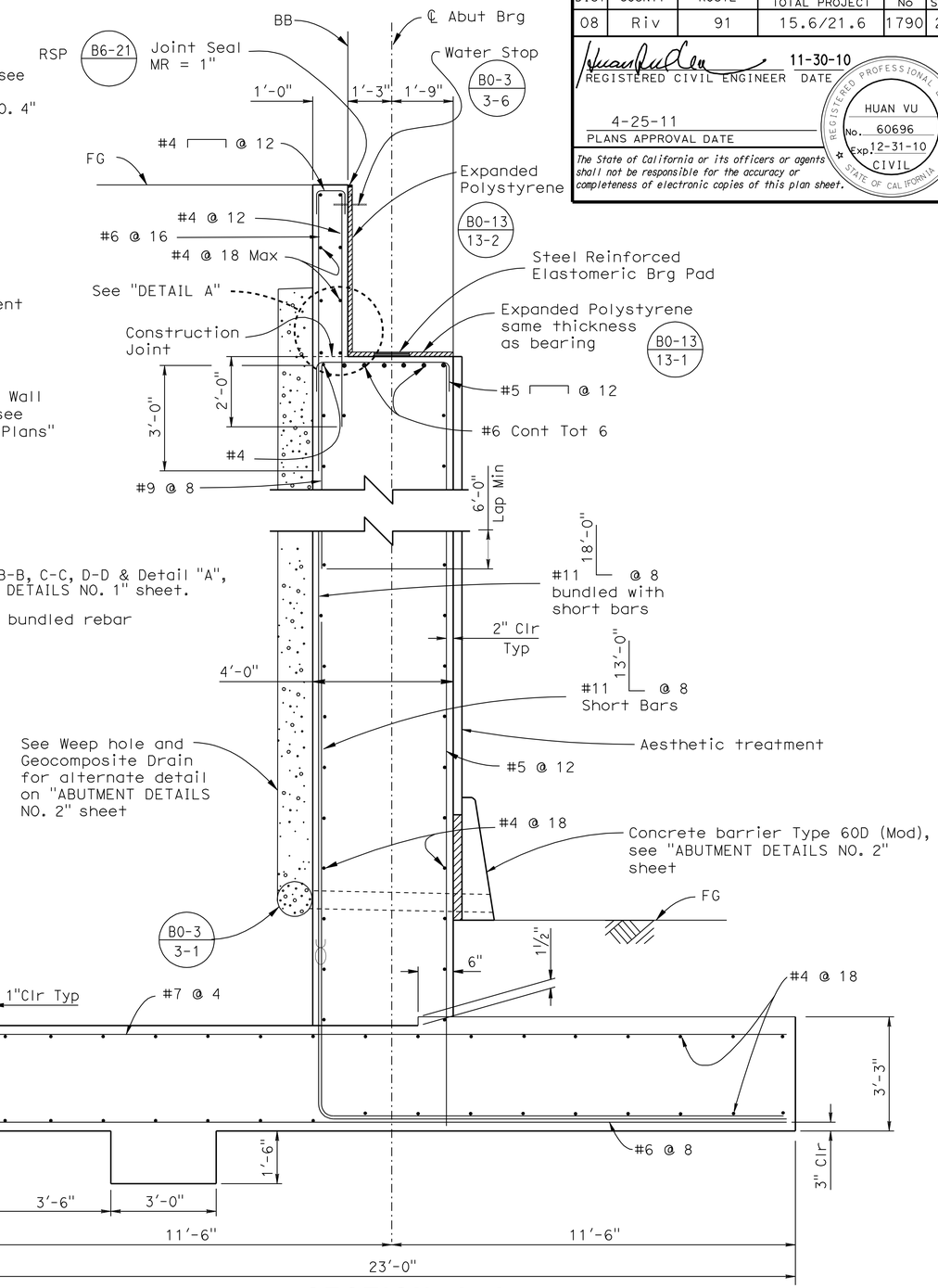

NOTE:

For Sections B-B, C-C, D-D & Detail "A", see "ABUTMENT DETAILS NO. 1" sheet.

Indicates bundled rebar

SECTION A-A

½" = 1'-0"

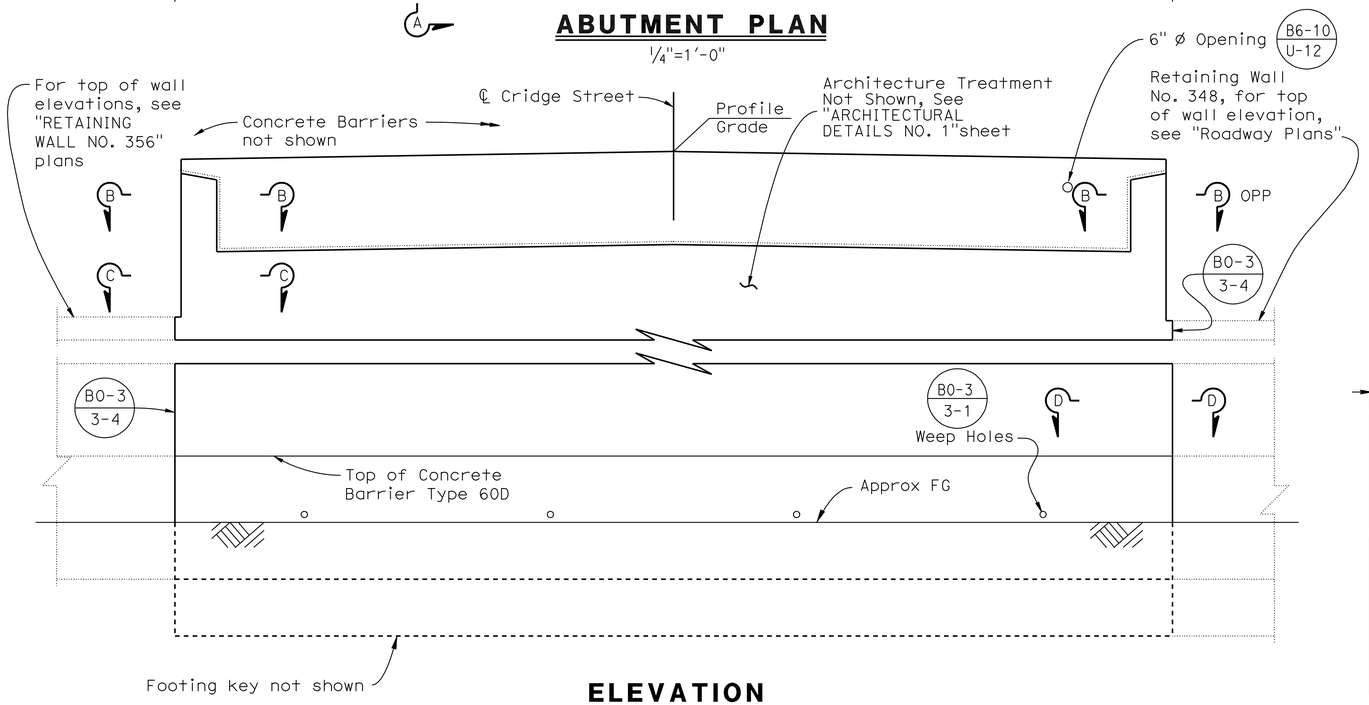

ELEVATION

¼" = 1'-0"

DESIGN	BY M.Vo / H. Vu	CHECKED J. Delgado	
DETAILS	BY D.Wooten/G.Hallstrom	CHECKED J. Delgado	
QUANTITIES	BY A. McPhee	CHECKED J. Szabo	

STATE OF CALIFORNIA
DEPARTMENT OF TRANSPORTATION

DIVISION OF ENGINEERING SERVICES
STRUCTURE DESIGN
DESIGN BRANCH 10

BRIDGE NO. 56-0835
POST MILE 19.62

CRIDGE STREET OC (REPLACE)
ABUTMENT 3 LAYOUT

STRUCTURES DESIGN DETAIL SHEET (ENGLISH) (REV. 10/25/05)

ORIGINAL SCALE IN INCHES FOR REDUCED PLANS 0 1 2 3

CU 08
EA 448401

DISREGARD PRINTS BEARING EARLIER REVISION DATES

REVISION DATES: 6-19-09 2-18-10 4-30-10 7-29-10 9-23-10 11-01-10

SHEET 6 OF 31

FILE => 560835fa31o06.dgn

USERNAME => trmmguye DATE PLOTTED => 30-APR-2011 TIME PLOTTED => 13:34

DIST	COUNTY	ROUTE	POST MILES TOTAL PROJECT	SHEET No	TOTAL SHEETS
08	Riv	91	15.6/21.6	1791	2028

REGISTERED CIVIL ENGINEER 11-30-10 DATE

4-25-11
PLANS APPROVAL DATE

REGISTERED PROFESSIONAL ENGINEER HUAN VU No. 60696 Exp. 12-31-10 CIVIL STATE OF CALIFORNIA

The State of California or its officers or agents shall not be responsible for the accuracy or completeness of electronic copies of this plan sheet.

NOTE:

For location of Sections B-B, C-C, D-D, and Detail "A", see "ABUTMENT 1 LAYOUT" and "ABUTMENT 3 LAYOUT" sheets.

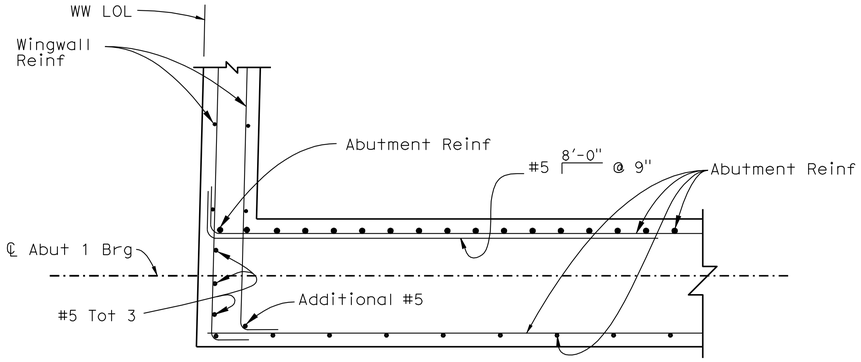

SECTION C-C

3/4"=1'-0"

NOTE: Abutment 1 Right shown,
Abutment 1 Left similar.
Abutment 3 Right and Left similar.

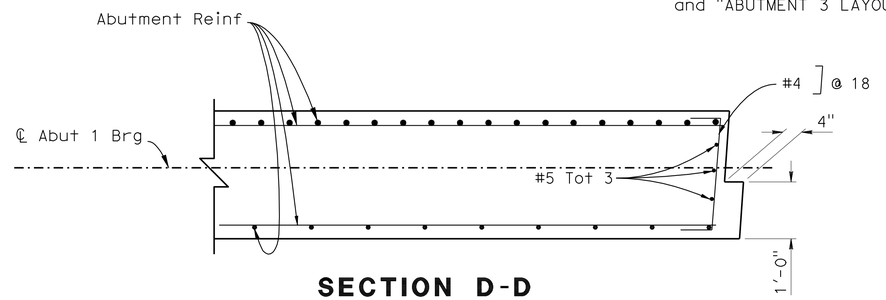

SECTION D-D

3/4"=1'-0"

NOTE: Abutment 1 Left shown,
Abutment 1 Right similar.
Abutment 3 Right and Left similar.

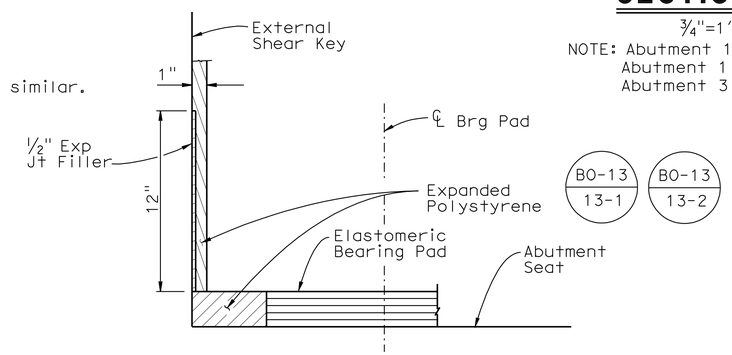

DETAIL B

NO SCALE

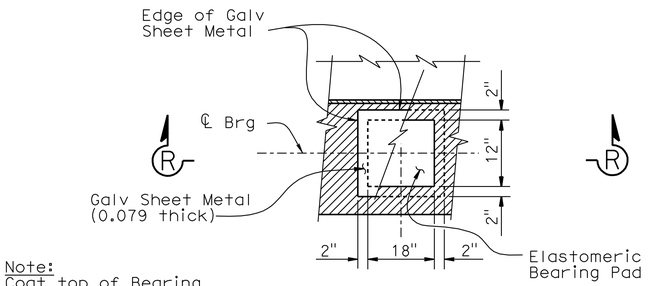

Note:
Coat top of Bearing Pad with silicone grease prior to placing sheet metal.

PLAN

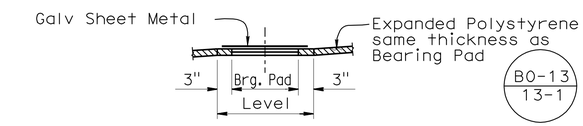

SECTION R-R

BEARING PAD DETAIL

No Scale
Details typical at all bearing pads

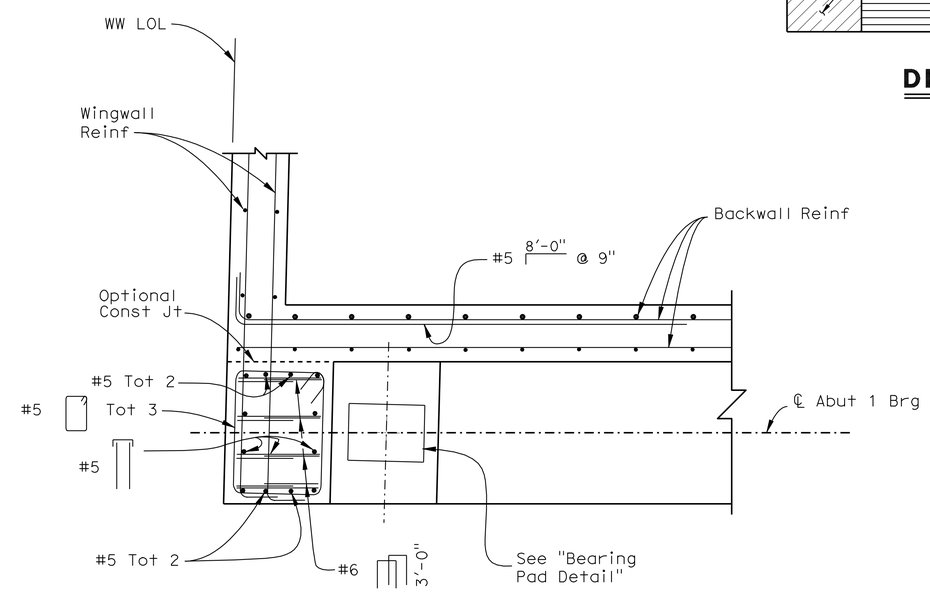

SECTION B-B

3/4"=1'-0"

NOTE: Abutment 1 Right shown,
Abutment 1 Left similar.
Abutment 3 Right and Left similar.

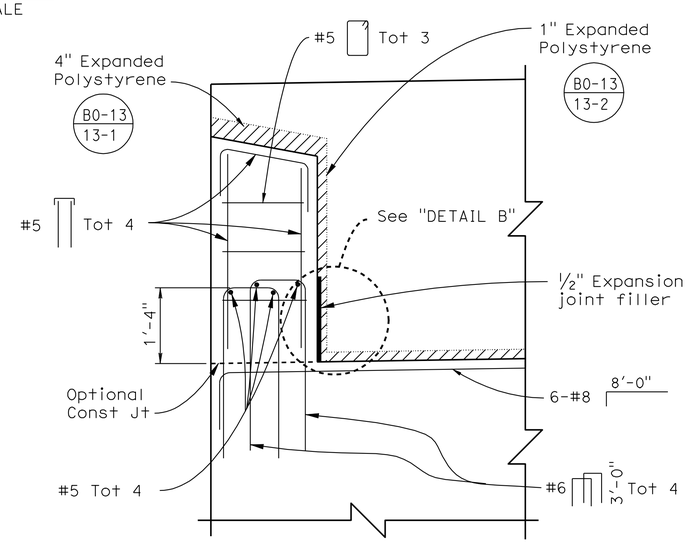

SHEAR KEY ELEVATION

3/4"=1'-0"

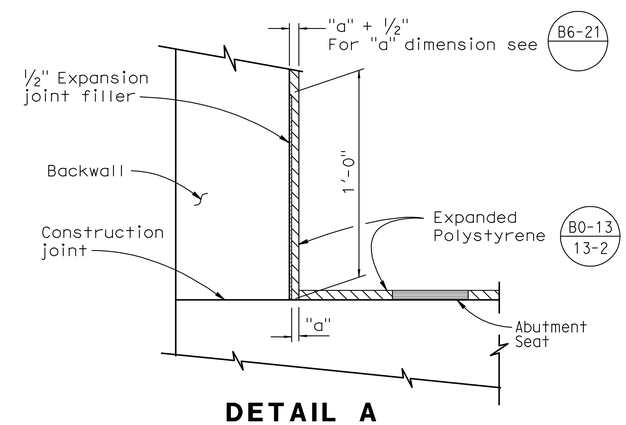

DETAIL A

No Scale

DESIGN	BY M. Vo	CHECKED J. Delgado	
DETAILS	BY D. Wooten	CHECKED J. Delgado	
QUANTITIES	BY A. McPhee	CHECKED J. Szabo	

STATE OF CALIFORNIA
DEPARTMENT OF TRANSPORTATION

DIVISION OF ENGINEERING SERVICES
STRUCTURE DESIGN
DESIGN BRANCH 10

BRIDGE NO. 56-0835
POST MILE 19.62

CRIDGE STREET OC (REPLACE)
ABUTMENT DETAILS NO. 1

STRUCTURES DESIGN DETAIL SHEET (ENGLISH) (REV. 10/25/05)

ORIGINAL SCALE IN INCHES FOR REDUCED PLANS 0 1 2 3

CU 08
EA 448401

DISREGARD PRINTS BEARING EARLIER REVISION DATES

REVISION DATES: 6-19-09 2-18-10 4-30-10 8-05-10 11-01-10

SHEET 7 OF 31

FILE => 560835fadt07.dgn

USERNAME => trimmguye DATE PLOTTED => 30-APR-2011 TIME PLOTTED => 13:34

DIST	COUNTY	ROUTE	POST MILES TOTAL PROJECT	SHEET No	TOTAL SHEETS
08	Riv	91	15.6/21.6	1792	2028

REGISTERED CIVIL ENGINEER 11-30-10 DATE

4-25-11
PLANS APPROVAL DATE

REGISTERED PROFESSIONAL ENGINEER HUAN VU No. 60696 Exp. 12-31-10 CIVIL STATE OF CALIFORNIA

The State of California or its officers or agents shall not be responsible for the accuracy or completeness of electronic copies of this plan sheet.

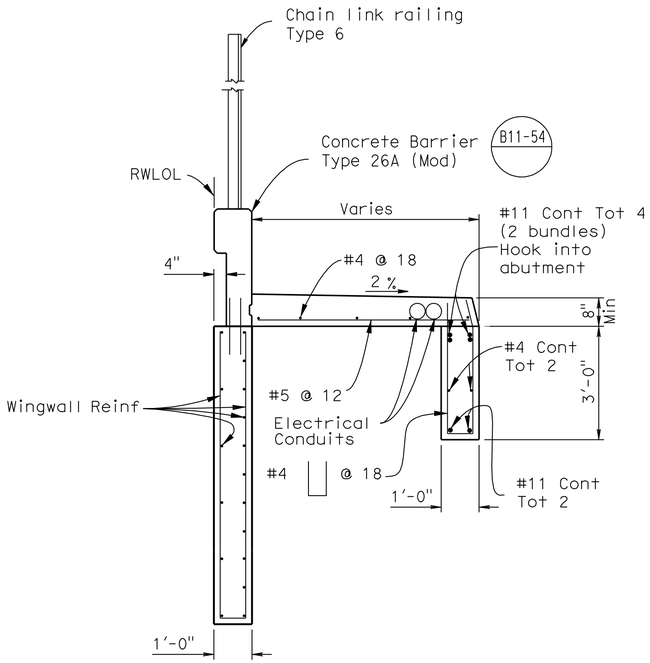

SECTION J-J

½" = 1'-0"

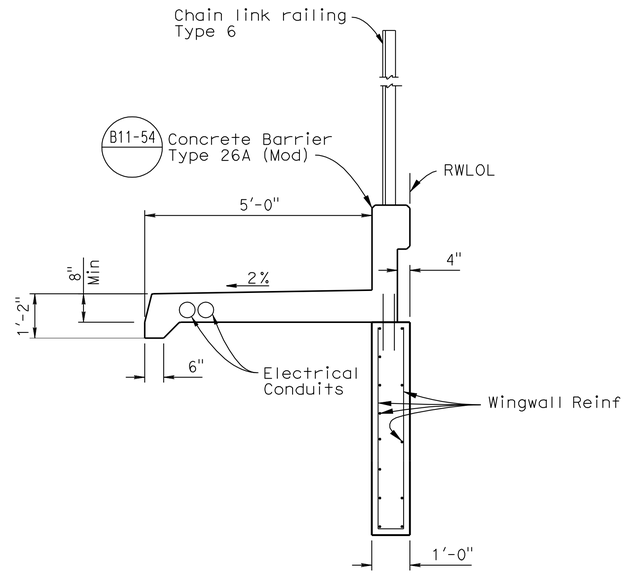

SECTION K-K

½" = 1'-0"

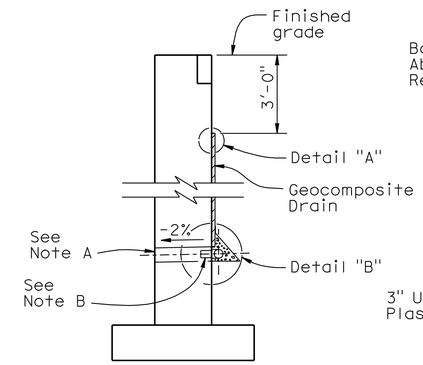

WALL SECTION

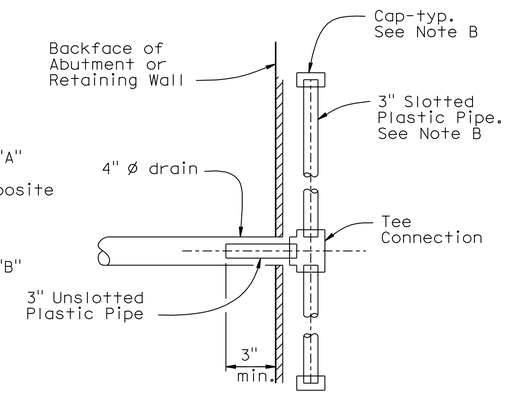

SECTION A-A

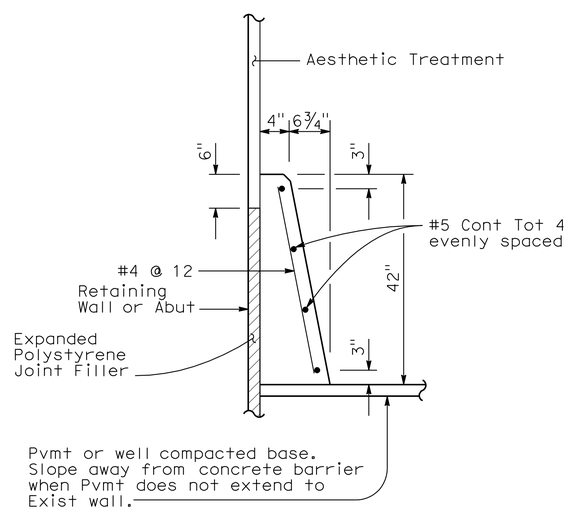

CONCRETE BARRIER TYPE 60D (MOD)

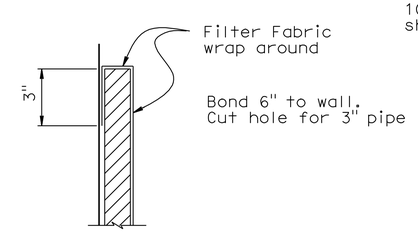

DETAIL "A"

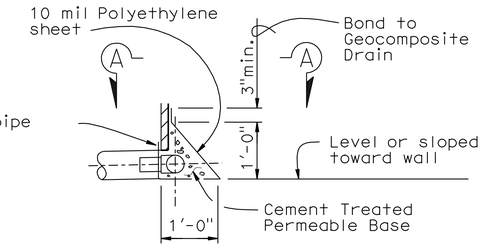

DETAIL "B"

WEEP HOLE AND GEOCOMPOSITE DRAIN

ALTERNATIVE TO BRIDGE DETAIL B0-3 / 3-1

Notes:

A. 4" ø drains at intermediate sag points and at 25' max center to center (9' c-c for Type 3 and 9'-3" c-c for Type 4 retaining walls).
For walls adjacent to sidewalks or curbs, provide 4" cast iron or asbestos cement pipe under the sidewalk to discharge through curb face.
Exposed wall drains shall be located 3"± above finished grade.

B. Geocomposite drain, cement treated permeable base, and 3"ø slotted plastic pipe continuous behind retaining wall or abutment. Cap ends of pipe. Provide "Tee" connection at each 4" ø drain.

C. Connect the low end of plastic pipe to the main outlet pipe as apprlicable.

NOTE:

For location of Sections J-J and K-K, see "ABUTMENT DETAILS NO. 3" and "ABUTMENT DETAILS NO. 4" sheets.

	BY	CHECKED
DESIGN	H. Vu	J. Delgado
DETAILS	G. Hallstrom	J. Delgado
QUANTITIES	A. McPhee	J. Szabo

STATE OF CALIFORNIA
DEPARTMENT OF TRANSPORTATION

DIVISION OF ENGINEERING SERVICES
STRUCTURE DESIGN
DESIGN BRANCH 10

BRIDGE NO. 56-0835
POST MILE 19.62

CRIDGE STREET OC (REPLACE)
ABUTMENT DETAILS NO. 2

STRUCTURES DESIGN DETAIL SHEET (ENGLISH) (REV. 10/25/05)

ORIGINAL SCALE IN INCHES FOR REDUCED PLANS 0 1 2 3

CU 08
EA 448401

DISREGARD PRINTS BEARING EARLIER REVISION DATES

REVISION DATES: 6-19-09, 2-18-10, 4-26-10, 8-03-10, 11-01-10

SHEET 8 OF 31

FILE => 560835fadt08.dgn

USERNAME => trmnguye DATE PLOTTED => 30-APR-2011 TIME PLOTTED => 13:34

DIST	COUNTY	ROUTE	POST MILES TOTAL PROJECT	SHEET No	TOTAL SHEETS
08	Riv	91	15.6/21.6	1793	2028

REGISTERED CIVIL ENGINEER 11-30-10 DATE

4-25-11
PLANS APPROVAL DATE

REGISTERED PROFESSIONAL ENGINEER HUAN VU No. 60696 Exp. 12-31-10 CIVIL STATE OF CALIFORNIA

The State of California or its officers or agents shall not be responsible for the accuracy or completeness of electronic copies of this plan sheet.

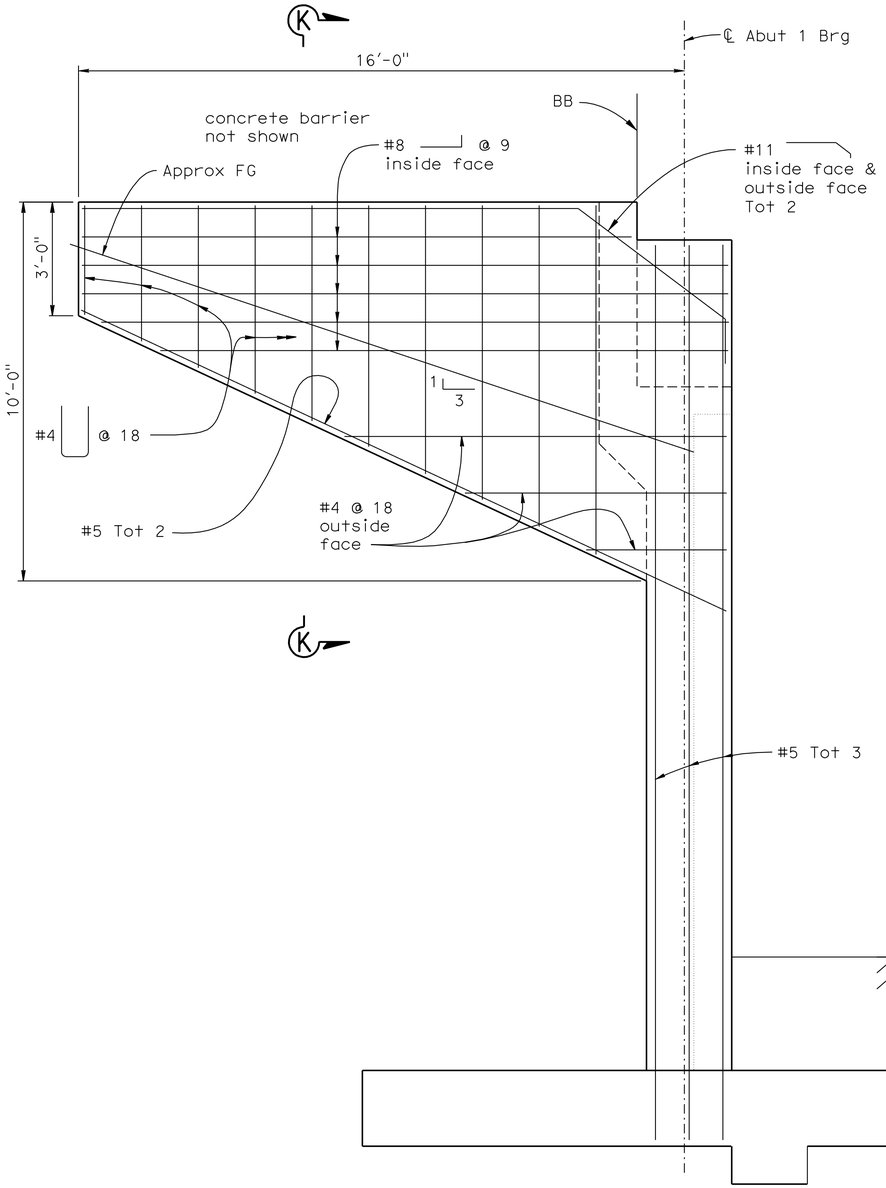

ABUTMENT 1 RIGHT WINGWALL ELEVATION

½"=1'-0"

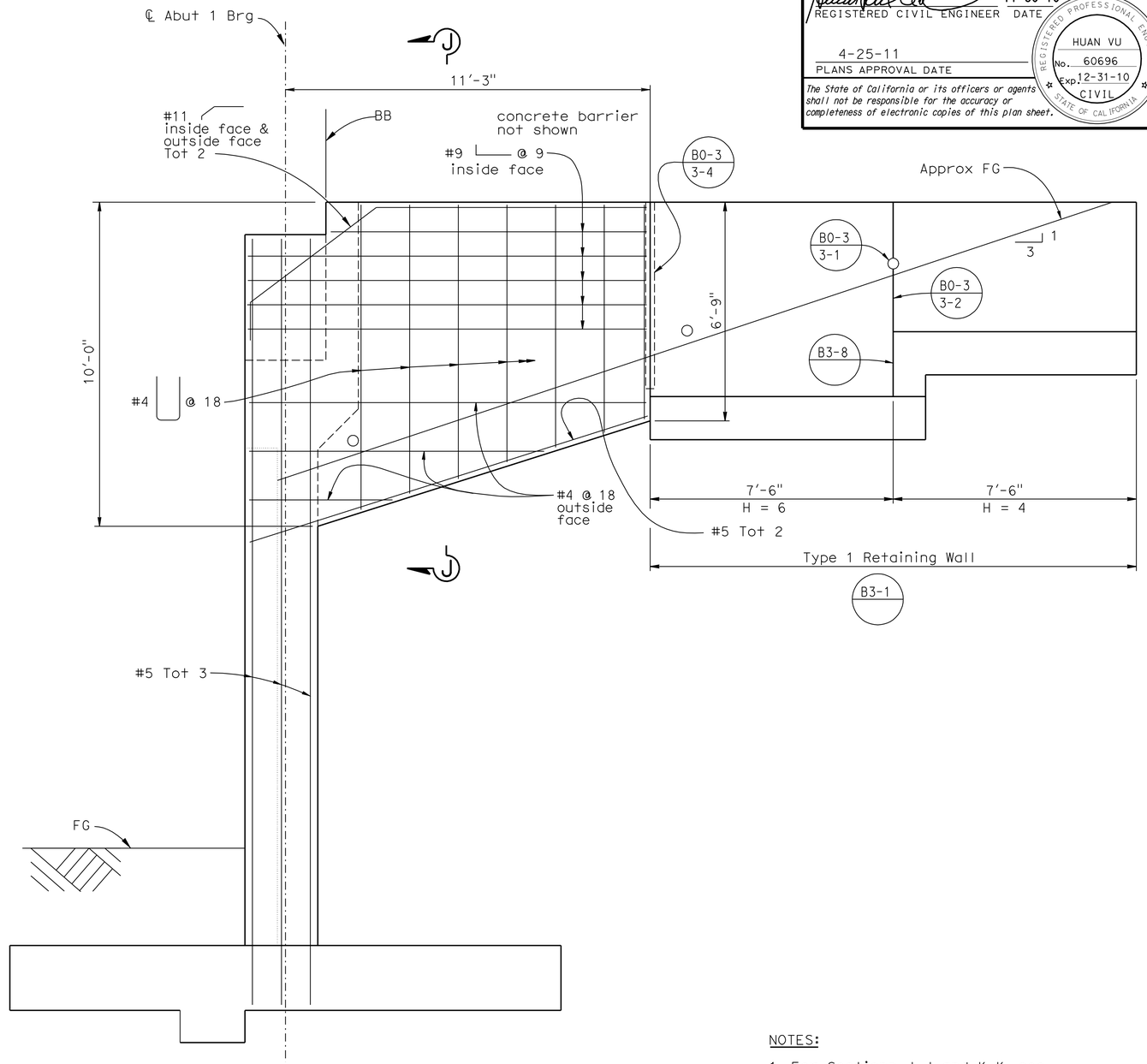

ABUTMENT 1 LEFT WINGWALL ELEVATION

½"=1'-0"

NOTES:

1. For Sections J-J and K-K, see "ABUTMENT DETAILS NO. 2" sheet.

DESIGN	BY H. Vu	CHECKED J. Delgado	
DETAILS	BY G. Hallstrom	CHECKED J. Delgado	
QUANTITIES	BY A. McPhee	CHECKED J. Szabo	

STATE OF CALIFORNIA
DEPARTMENT OF TRANSPORTATION

DIVISION OF ENGINEERING SERVICES
STRUCTURE DESIGN
DESIGN BRANCH 10

BRIDGE NO. 56-0835
POST MILE 19.62

CRIDGE STREET OC (REPLACE)

ABUTMENT DETAILS NO. 3

STRUCTURES DESIGN DETAIL SHEET (ENGLISH) (REV. 10/25/05)

ORIGINAL SCALE IN INCHES FOR REDUCED PLANS 0 1 2 3

CU 08
EA 448401

DISREGARD PRINTS BEARING EARLIER REVISION DATES

REVISION DATES: ~~6-19-09~~ ~~2-18-10~~ 5-03-10

SHEET 9 OF 31

FILE => 560835fadt09.dgn

USERNAME => trmmguye DATE PLOTTED => 30-APR-2011 TIME PLOTTED => 13:35

DIST	COUNTY	ROUTE	POST MILES TOTAL PROJECT	SHEET No	TOTAL SHEETS
08	Riv	91	15.6/21.6	1794	2028

REGISTERED CIVIL ENGINEER 11-30-10 DATE

4-25-11
PLANS APPROVAL DATE

The State of California or its officers or agents shall not be responsible for the accuracy or completeness of electronic copies of this plan sheet.

REGISTERED PROFESSIONAL ENGINEER HUAN VU No. 60696 Exp. 12-31-10 CIVIL STATE OF CALIFORNIA

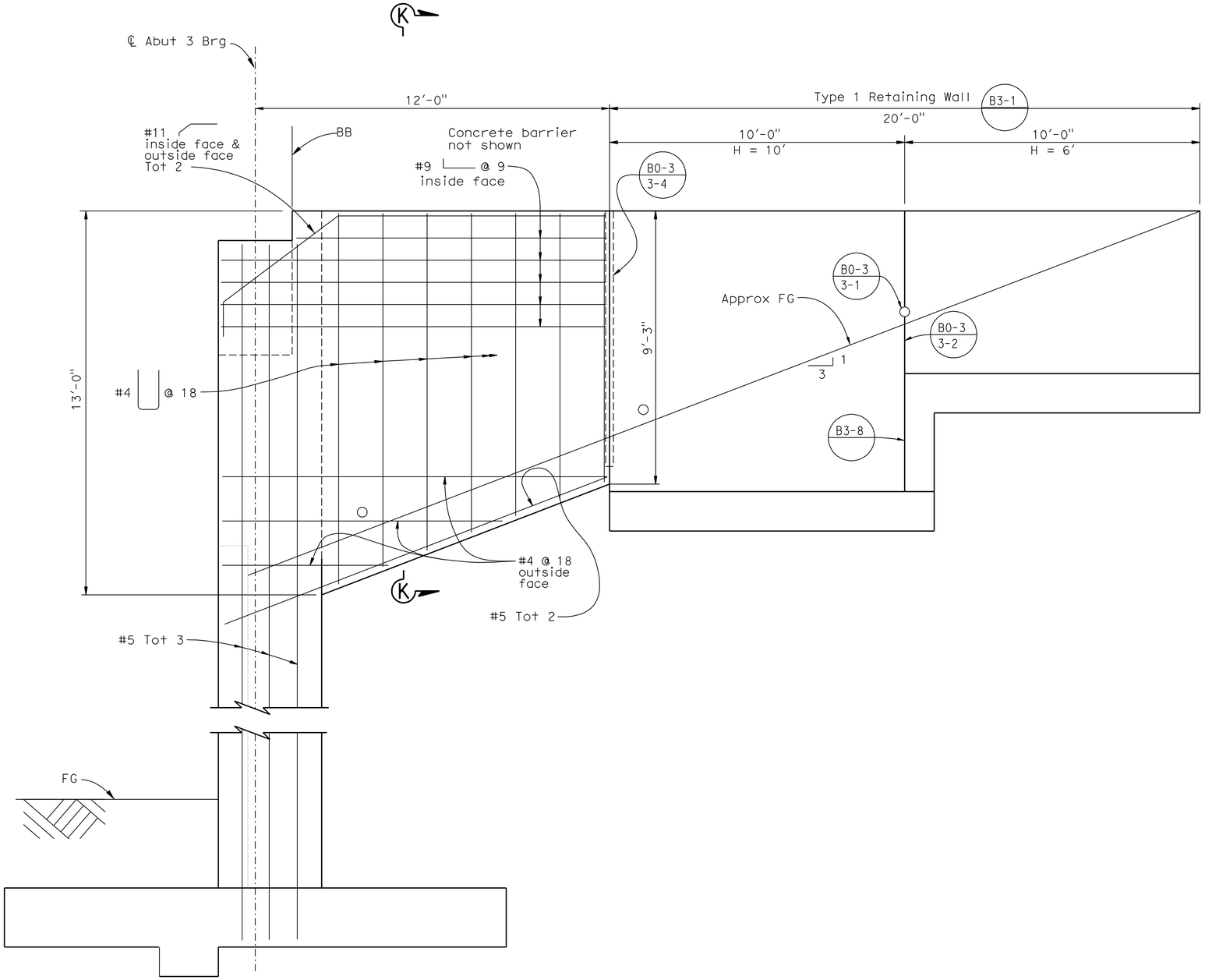

ABUTMENT 3 RIGHT WINGWALL ELEVATION

1/2"=1'-0"

NOTES:

1. Abutment 3 Right Wingwall shown, Abutment 3 Left Wingwall similar.
2. For Section K-K, see "ABUTMENT DETAILS NO. 2" sheet.

DESIGN	BY H. Vu	CHECKED J. Delgado	
DETAILS	BY G. Hallstrom	CHECKED J. Delgado	
QUANTITIES	BY A. McPhee	CHECKED J. Szabo	

STATE OF CALIFORNIA
DEPARTMENT OF TRANSPORTATION

DIVISION OF ENGINEERING SERVICES
STRUCTURE DESIGN
DESIGN BRANCH 10

BRIDGE NO. 56-0835
POST MILE 19.62

CRIDGE STREET OC (REPLACE)
ABUTMENT DETAILS NO. 4

STRUCTURES DESIGN DETAIL SHEET (ENGLISH) (REV. 10/25/05)

ORIGINAL SCALE IN INCHES FOR REDUCED PLANS 0 1 2 3

CU 08
EA 448401

DISREGARD PRINTS BEARING EARLIER REVISION DATES

REVISION DATES: 6-19-09 2-18-10 5-03-10 8-03-10

SHEET 10 OF 31

FILE => 560835fadt10.dgn

USERNAME => trmnguye DATE PLOTTED => 30-APR-2011 TIME PLOTTED => 13:35

DIST	COUNTY	ROUTE	POST MILES TOTAL PROJECT	SHEET No	TOTAL SHEETS
08	Riv	91	15.6/21.6	1795	2028

REGISTERED CIVIL ENGINEER 11-30-10 DATE

4-25-11
PLANS APPROVAL DATE

The State of California or its officers or agents shall not be responsible for the accuracy or completeness of electronic copies of this plan sheet.

REGISTERED PROFESSIONAL ENGINEER HUAN VU No. 60696 Exp. 12-31-10 CIVIL STATE OF CALIFORNIA

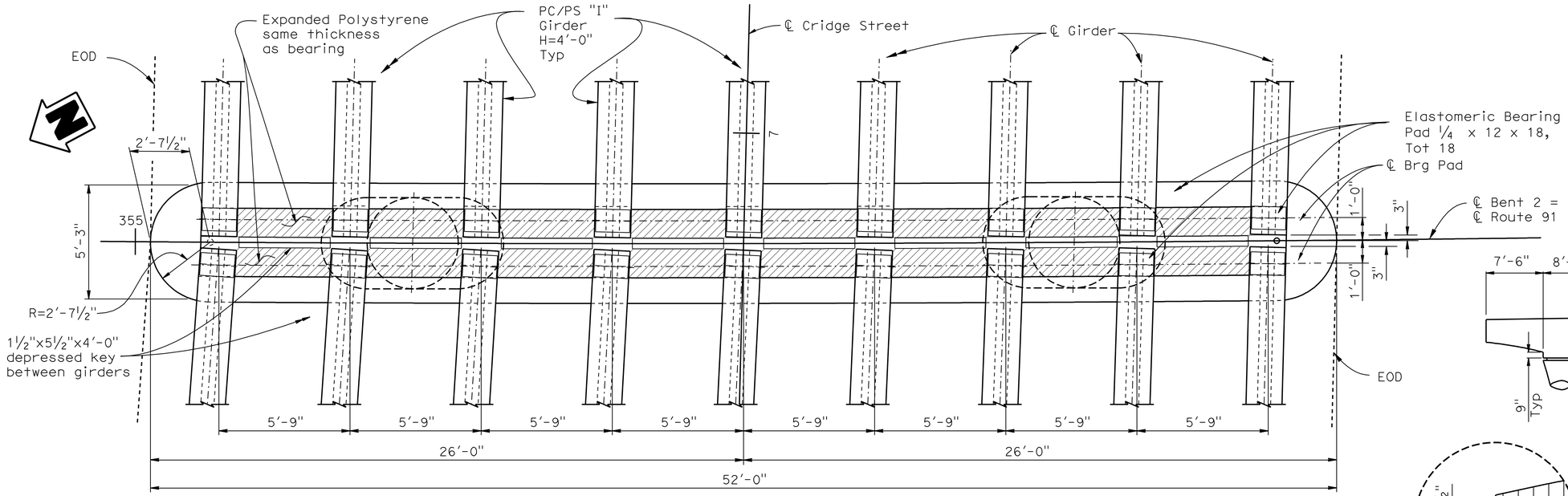

PLAN

3/8"=1'-0"

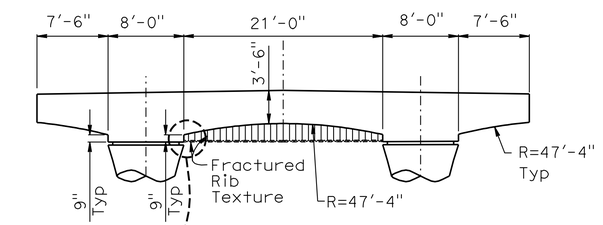

ELEVATION

1/8"=1'-0"

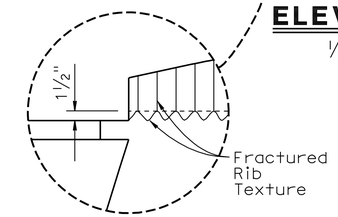

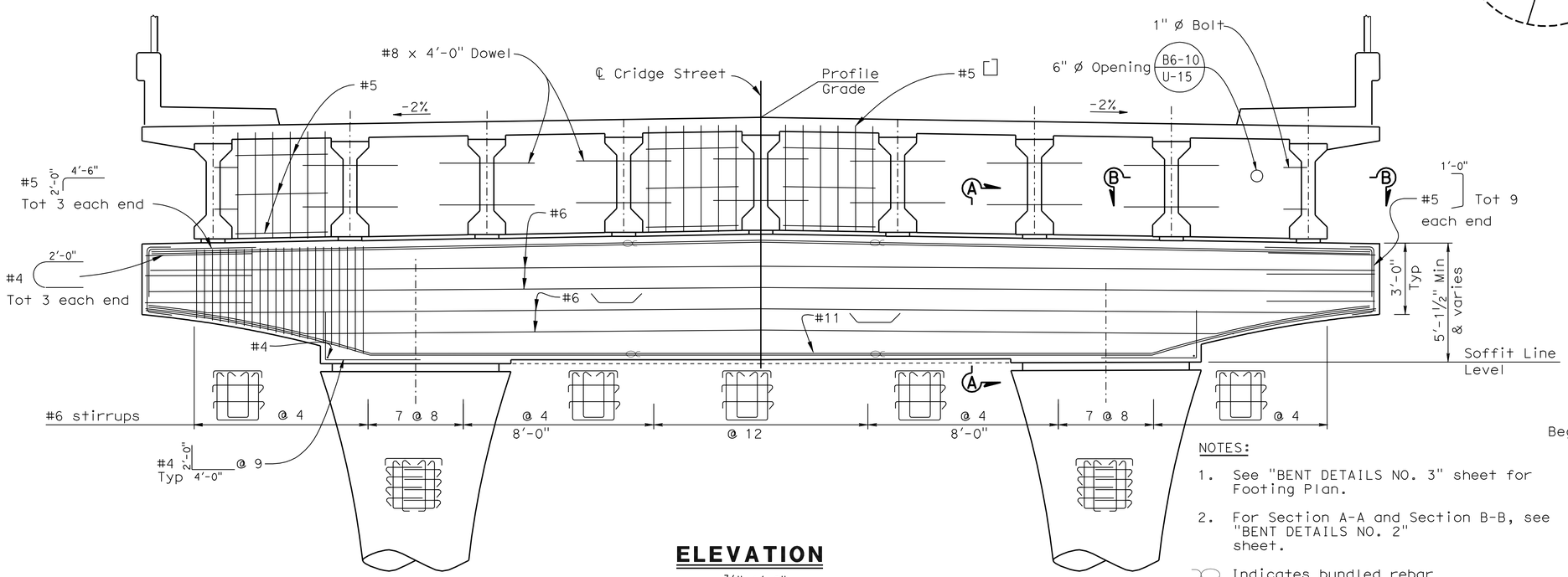

ELEVATION

3/8"=1'-0"

NOTES:

1. See "BENT DETAILS NO. 3" sheet for Footing Plan.
2. For Section A-A and Section B-B, see "BENT DETAILS NO. 2" sheet.

Indicates bundled rebar

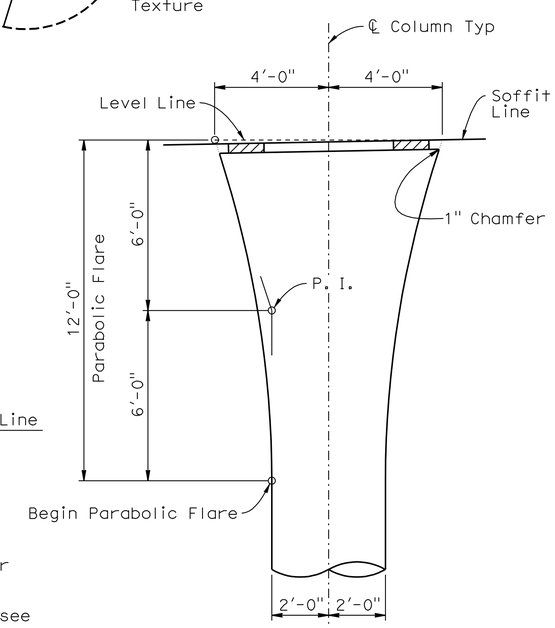

COLUMN GEOMETRICS

3/8"=1'-0"

DESIGN	BY M.Vo	CHECKED J. Delgado	
DETAILS	BY D.Wooten	CHECKED J. Delgado	
QUANTITIES	BY A. McPhee	CHECKED J. Szabo	

STATE OF CALIFORNIA
DEPARTMENT OF TRANSPORTATION

DIVISION OF ENGINEERING SERVICES
STRUCTURE DESIGN
DESIGN BRANCH 10

BRIDGE NO. 56-0835
POST MILE 19.62

CRIDGE STREET OC (REPLACE)
BENT LAYOUT

STRUCTURES DESIGN DETAIL SHEET (ENGLISH) (REV. 10/25/05)

ORIGINAL SCALE IN INCHES FOR REDUCED PLANS 0 1 2 3

CU 08
EA 448401

DISREGARD PRINTS BEARING EARLIER REVISION DATES

REVISION DATES: 6-19-09 2-18-10 4-23-10 7-28-10 9-23-10 11-01-10

SHEET 11 OF 31

FILE => 560835hb21o11.dgn

USERNAME => trmmgoye DATE PLOTTED => 30-APR-2011 TIME PLOTTED => 13:35

DIST	COUNTY	ROUTE	POST MILES TOTAL PROJECT	SHEET No	TOTAL SHEETS
08	Riv	91	15.6/21.6	1796	2028

REGISTERED CIVIL ENGINEER 11-30-10 DATE

4-25-11
PLANS APPROVAL DATE

REGISTERED PROFESSIONAL ENGINEER HUAN VU No. 60696 Exp. 12-31-10 CIVIL STATE OF CALIFORNIA

The State of California or its officers or agents shall not be responsible for the accuracy or completeness of electronic copies of this plan sheet.

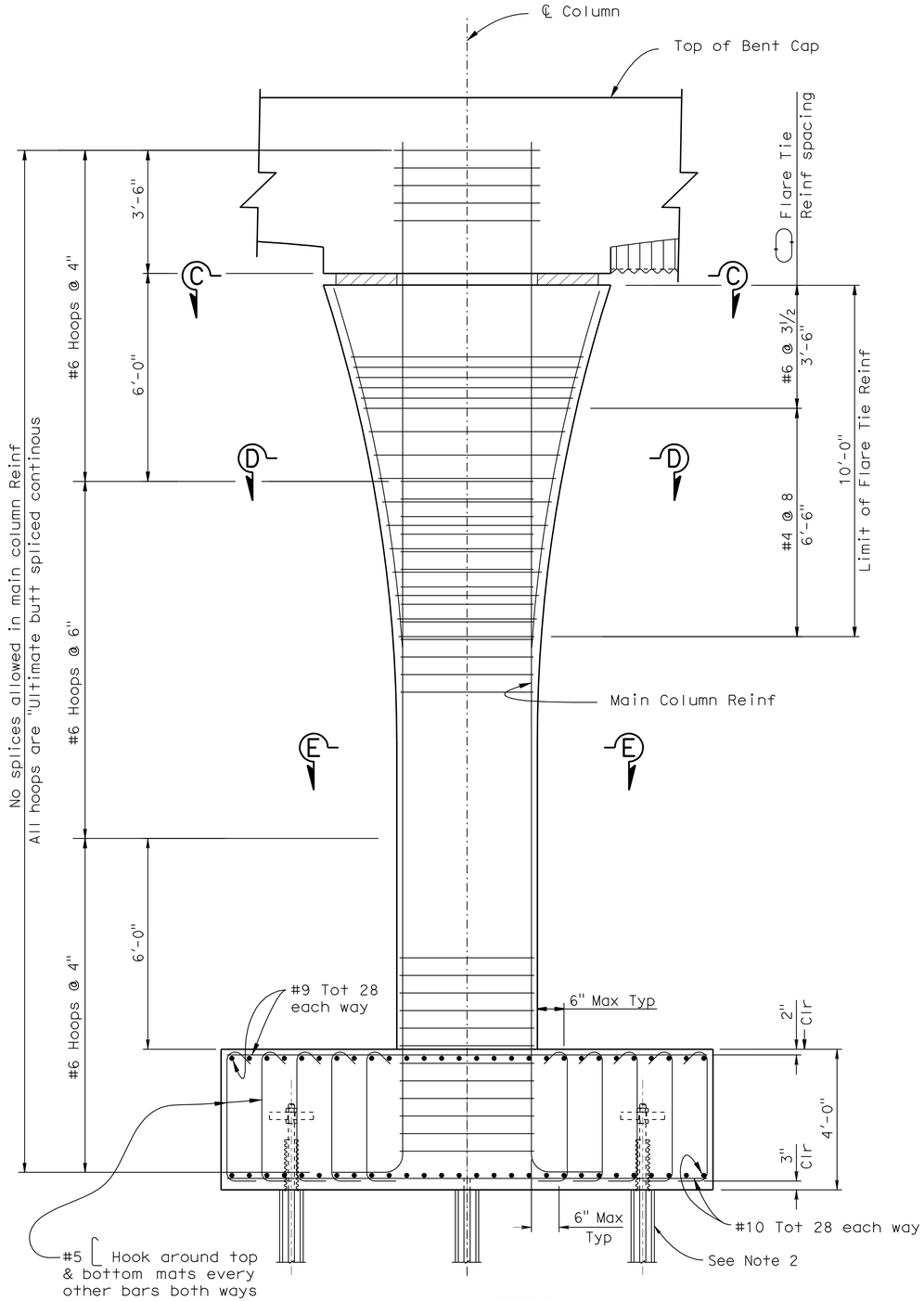

ELEVATION

½"=1'-0"

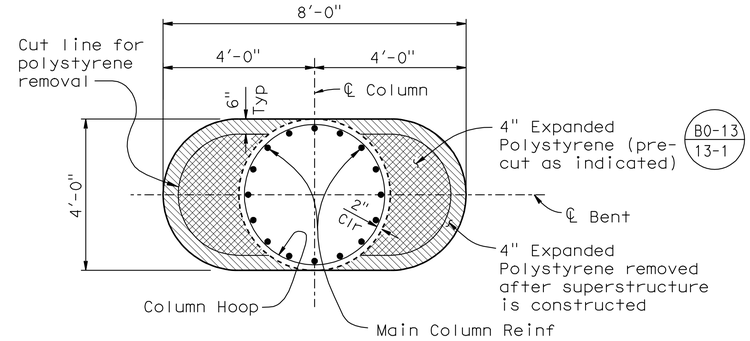

SECTION C-C

½"=1'-0"

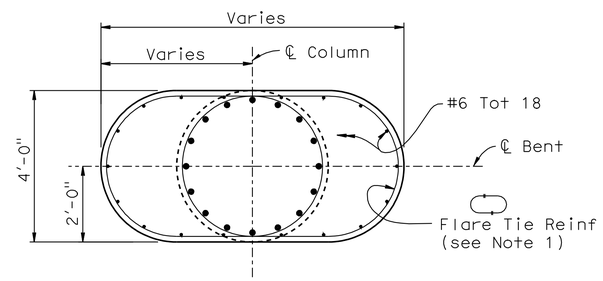

SECTION D-D

½"=1'-0"

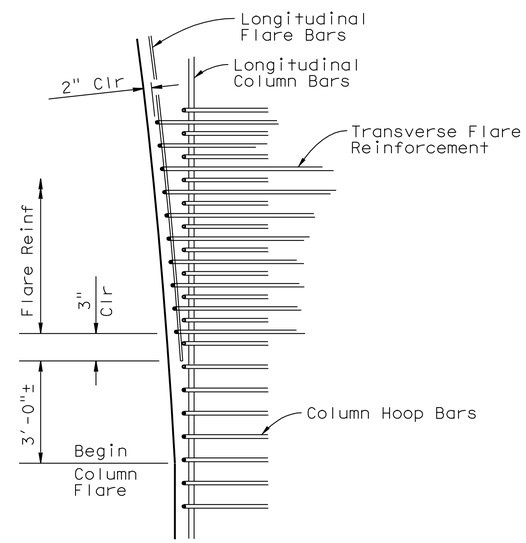

COLUMN FLARE HOOP AND TIE DETAIL

NO SCALE

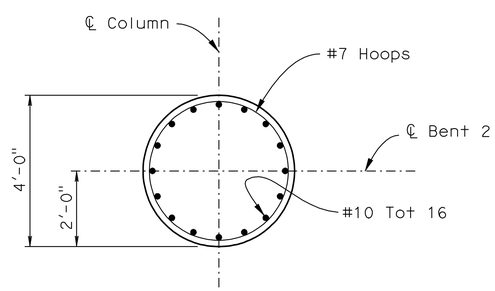

SECTION E-E

½" =1'-0"

NOTES:

1. Splice Flare Tie Reinforcement with mechanical couplers. Stagger location of couplers.
2. For Tiedown Anchor Details, see "BENT DETAILS NO. 3" sheet.

DESIGN	BY M.Vo / H. Vu	CHECKED J. Delgado	
DETAILS	BY D.Wooten	CHECKED J. Delgado	
QUANTITIES	BY A. McPhee	CHECKED J. Szabo	

STATE OF CALIFORNIA
DEPARTMENT OF TRANSPORTATION

DIVISION OF ENGINEERING SERVICES
STRUCTURE DESIGN
DESIGN BRANCH 10

BRIDGE NO. 56-0835
POST MILE 19.62

CRIDGE STREET OC (REPLACE)
BENT DETAILS NO. 1

STRUCTURES DESIGN DETAIL SHEET (ENGLISH) (REV. 10/25/05)

ORIGINAL SCALE IN INCHES FOR REDUCED PLANS 0 1 2 3

CU 08
EA 448401

DISREGARD PRINTS BEARING EARLIER REVISION DATES

REVISION DATES: 6-19-09 2-18-10 4-22-10 7-28-10 9-23-10 11-05-10

SHEET 12 OF 31

FILE => 560835hbdt12.dgn

USERNAME => trmrguye DATE PLOTTED => 30-APR-2011 TIME PLOTTED => 13:35

DIST	COUNTY	ROUTE	POST MILES TOTAL PROJECT	SHEET No	TOTAL SHEETS
08	Riv	91	15.6/21.6	1797	2028

REGISTERED CIVIL ENGINEER 11-30-10 DATE

4-25-11
PLANS APPROVAL DATE

REGISTERED PROFESSIONAL ENGINEER HUAN VU No. 60696 Exp. 12-31-10 CIVIL STATE OF CALIFORNIA

The State of California or its officers or agents shall not be responsible for the accuracy or completeness of electronic copies of this plan sheet.

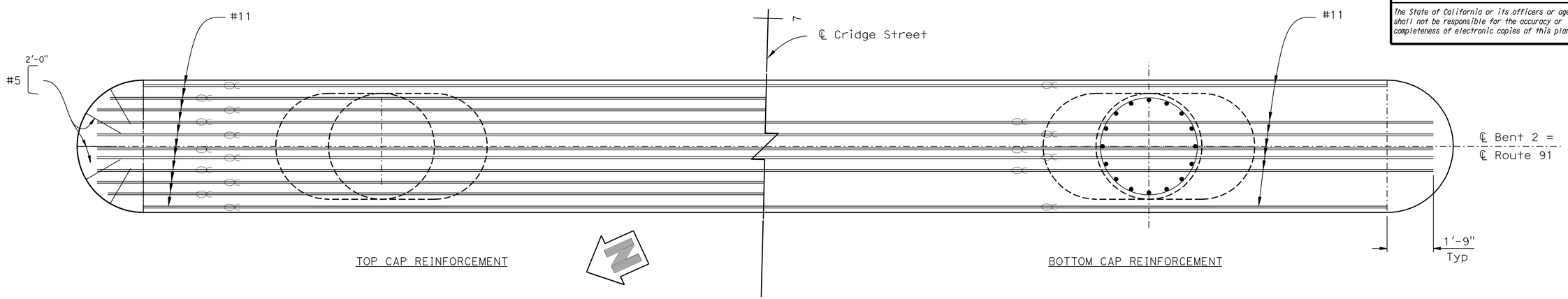

PLAN-BENT CAP

1/2"=1'-0"

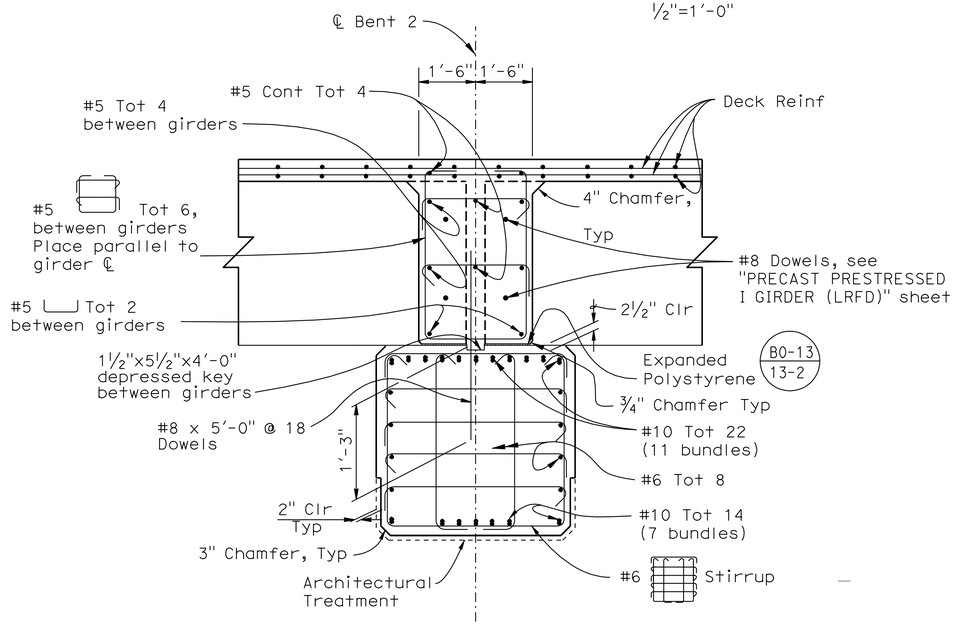

SECTION A-A

1/2" =1'-0"

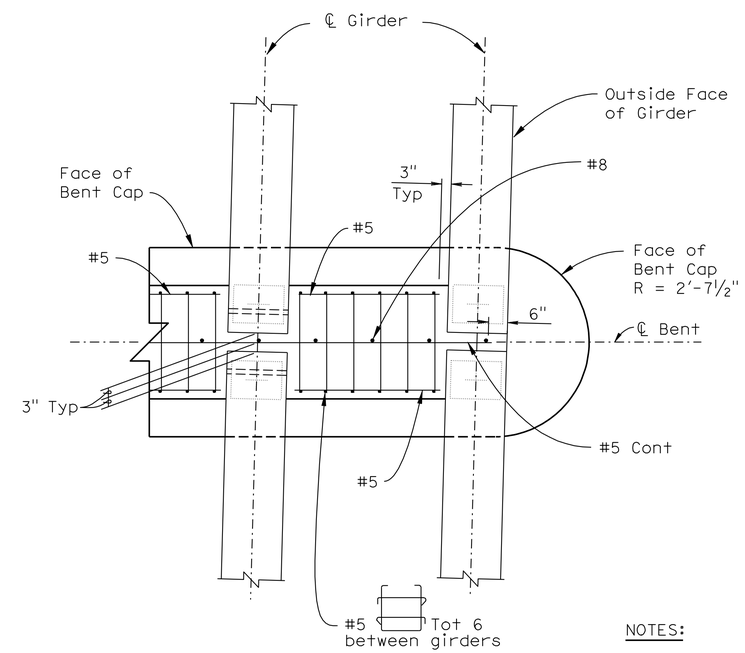

SECTION B-B

1/2" =1'-0"

NOTES:

1. For location of Section A-A and Section B-B, see "BENT LAYOUT" sheet.

Indicates bundled rebar

DESIGN	BY M. Vo / H. Vu	CHECKED J. Delgado	
DETAILS	BY D. Wooten	CHECKED J. Delgado	
QUANTITIES	BY A. McPhee	CHECKED J. Szabo	

STATE OF CALIFORNIA
DEPARTMENT OF TRANSPORTATION

DIVISION OF ENGINEERING SERVICES
STRUCTURE DESIGN
DESIGN BRANCH 10

BRIDGE NO. 56-0835
POST MILE 19.62

CRIDGE STREET OC (REPLACE)

BENT DETAILS NO. 2

STRUCTURES DESIGN DETAIL SHEET (ENGLISH) (REV. 10/25/05)

ORIGINAL SCALE IN INCHES FOR REDUCED PLANS 0 1 2 3

CU 08
EA 448401

DISREGARD PRINTS BEARING EARLIER REVISION DATES

REVISION DATES: 6-19-09 2-18-10 4-23-10 7-28-10 10-04-10 11-01-10

SHEET 13 OF 31

FILE => 560835hbdt13.dgn

USERNAME => trmnguye DATE PLOTTED => 30-APR-2011 TIME PLOTTED => 13:35

DIST	COUNTY	ROUTE	POST MILES TOTAL PROJECT	SHEET No	TOTAL SHEETS
08	Riv	91	15.6/21.6	1798	2028

REGISTERED CIVIL ENGINEER 11-30-10 DATE

4-25-11
PLANS APPROVAL DATE

REGISTERED PROFESSIONAL ENGINEER HUAN VU No. 60696 Exp. 12-31-10 CIVIL STATE OF CALIFORNIA

The State of California or its officers or agents shall not be responsible for the accuracy or completeness of electronic copies of this plan sheet.

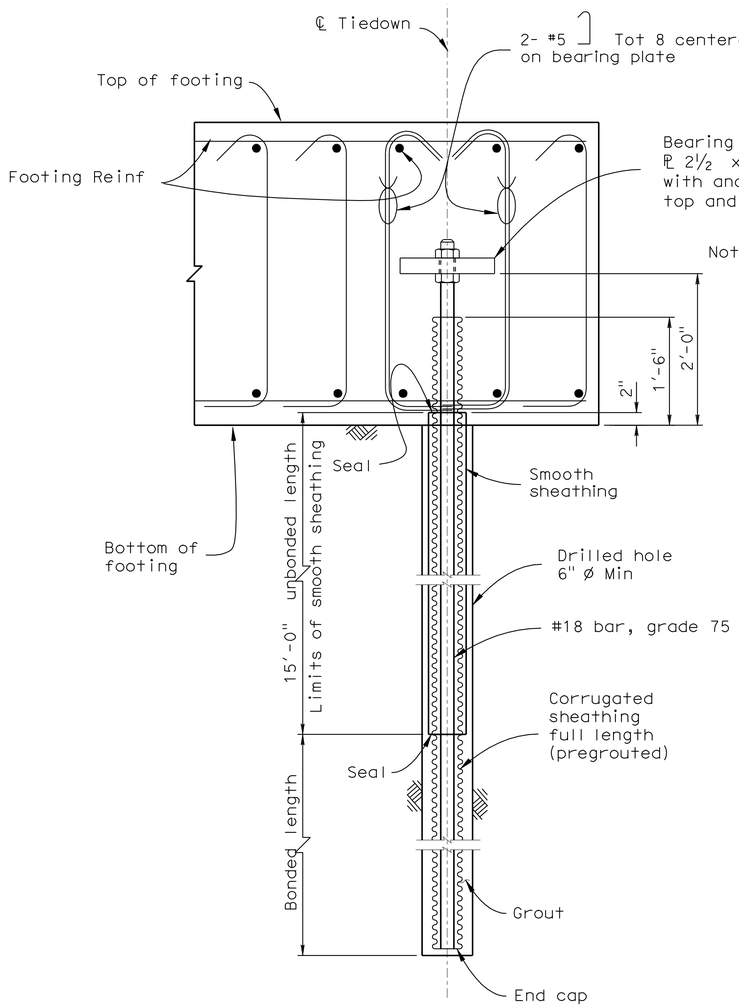

Note : The bonded length is to be determined by the contractor.

T = Design force per tiedown = 270 kips

Lock-off force per tiedown = 0 kips

TIEDOWN ANCHOR DETAIL

1"=1'-0"

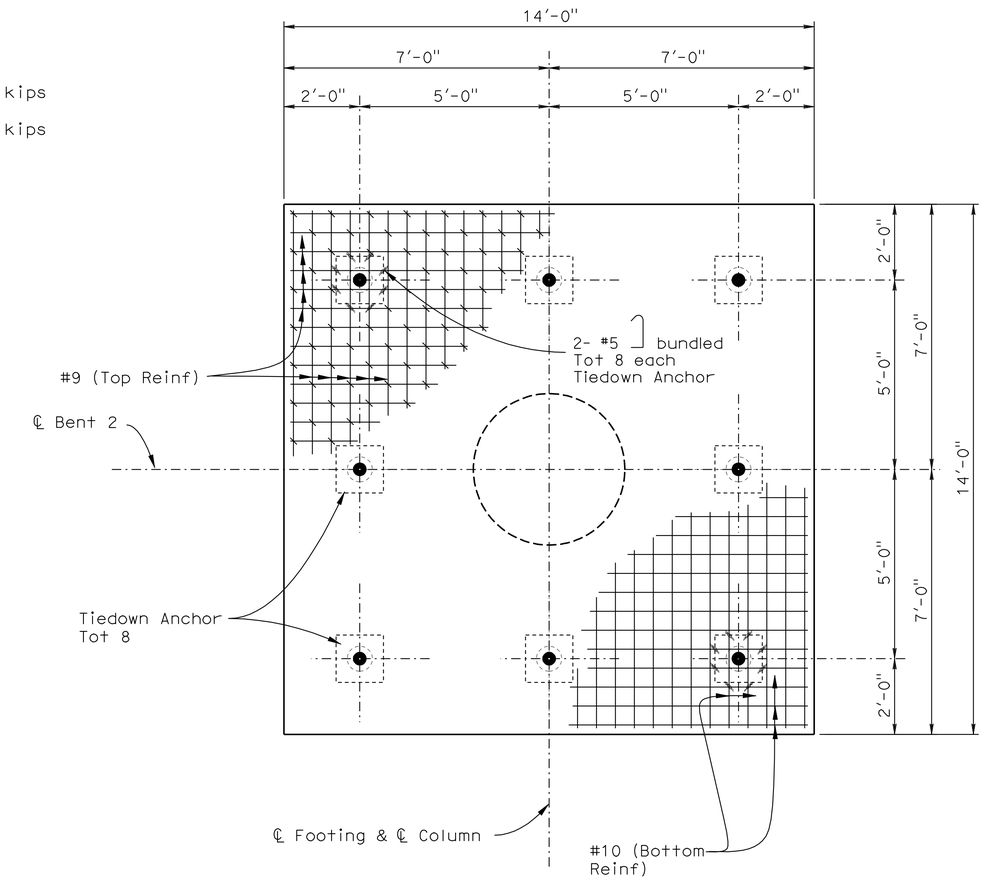

FOOTING PLAN

½"=1'-0"

DESIGN	BY M. Vo	CHECKED J. Delgado	
DETAILS	BY G. Hallstrom	CHECKED J. Delgado	
QUANTITIES	BY A. McPhee	CHECKED J. Szabo	

STATE OF CALIFORNIA
DEPARTMENT OF TRANSPORTATION

DIVISION OF ENGINEERING SERVICES
STRUCTURE DESIGN
DESIGN BRANCH 10

BRIDGE NO. 56-0835
POST MILE 19.62

CRIDGE STREET OC (REPLACE)
BENT DETAILS NO. 3

STRUCTURES DESIGN DETAIL SHEET (ENGLISH) (REV. 10/25/05)

ORIGINAL SCALE IN INCHES FOR REDUCED PLANS 0 1 2 3

CU 08
EA 448401

DISREGARD PRINTS BEARING EARLIER REVISION DATES → 7-28-10

REVISION DATES

SHEET 14 OF 31

FILE => 560835hbdt14.dgn

USERNAME => trmmguye DATE PLOTTED => 30-APR-2011 TIME PLOTTED => 13:35

DIST	COUNTY	ROUTE	POST MILES TOTAL PROJECT	SHEET No	TOTAL SHEETS
08	Riv	91	15.6/21.6	1799	2028

REGISTERED CIVIL ENGINEER 11-30-10 DATE

4-25-11
PLANS APPROVAL DATE

REGISTERED PROFESSIONAL ENGINEER HUAN VU No. 60696 Exp. 12-31-10 CIVIL STATE OF CALIFORNIA

The State of California or its officers or agents shall not be responsible for the accuracy or completeness of electronic copies of this plan sheet.

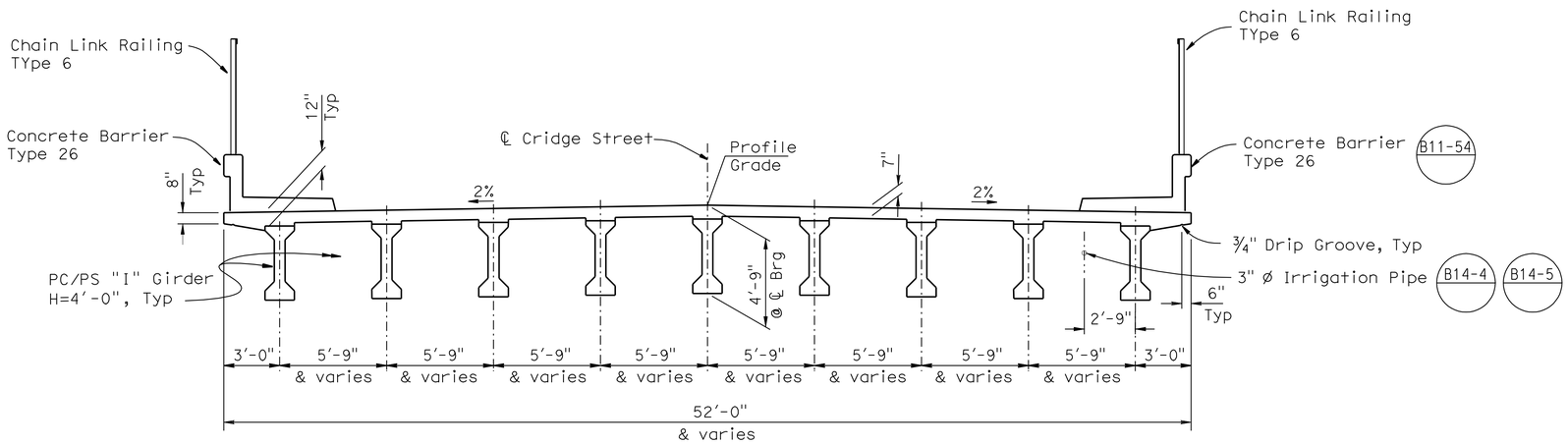

TYPICAL SECTION

¼" = 1'-0"

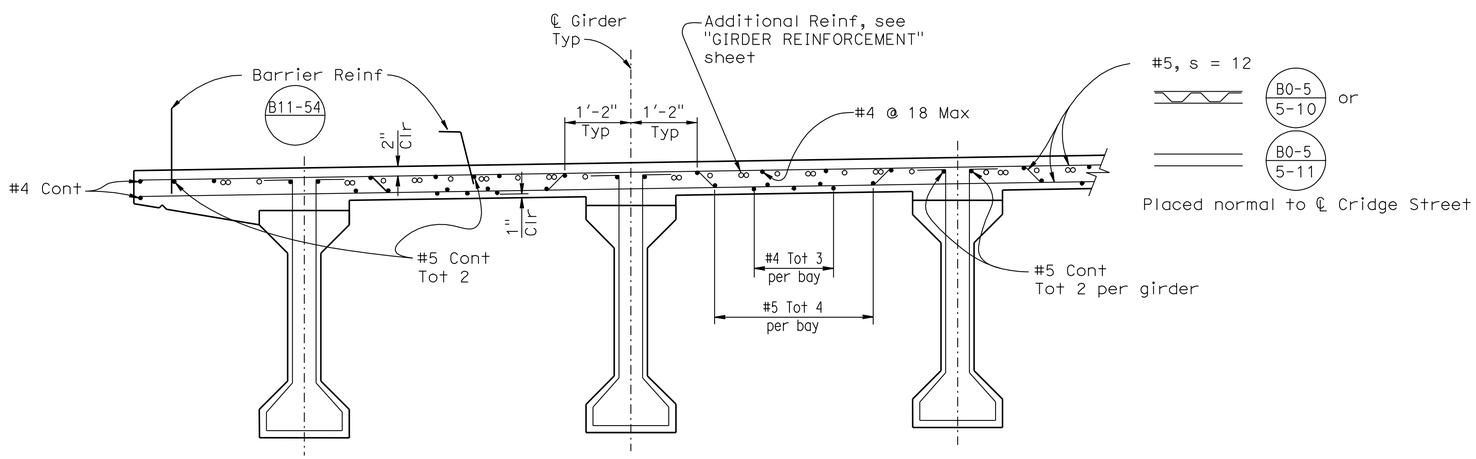

PART TYPICAL SECTION

B0-5

¾" = 1'-0"

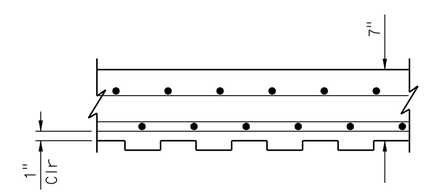

CONCRETE DECK WITH OPTIONAL PERMANENT STEEL DECK FORM

1½"=1'-0"

NOTE:

Reinforcement are symmetric about ℄ Bridge.

DESIGN	BY M. Vo	CHECKED J. Delgado	
DETAILS	BY D.Wooten/G.Hallstrom	CHECKED J. Delgado	
QUANTITIES	BY A. McPhee	CHECKED J. Szabo	

STATE OF CALIFORNIA
DEPARTMENT OF TRANSPORTATION

DIVISION OF ENGINEERING SERVICES
STRUCTURE DESIGN
DESIGN BRANCH 10

BRIDGE NO. 56-0835
POST MILE 19.62

CRIDGE STREET OC (REPLACE)
TYPICAL SECTION

STRUCTURES DESIGN DETAIL SHEET (ENGLISH) (REV. 10/25/05)

ORIGINAL SCALE IN INCHES FOR REDUCED PLANS 0 1 2 3

CU 08
EA 448401

DISREGARD PRINTS BEARING EARLIER REVISION DATES

REVISION DATES: 6-19-09 2-18-10 4-26-10 8-05-10 11-01-10

SHEET 15 OF 31

FILE => 560835kts15.dgn

USERNAME => trmnguye DATE PLOTTED => 30-APR-2011 TIME PLOTTED => 13:35

DIST	COUNTY	ROUTE	POST MILES TOTAL PROJECT	SHEET No	TOTAL SHEETS
08	Riv	91	15.6/21.6	1800	2028

REGISTERED CIVIL ENGINEER 11-30-10 DATE

4-25-11
PLANS APPROVAL DATE

REGISTERED PROFESSIONAL ENGINEER HUAN VU No. 60696 Exp. 12-31-10 CIVIL STATE OF CALIFORNIA

The State of California or its officers or agents shall not be responsible for the accuracy or completeness of electronic copies of this plan sheet.

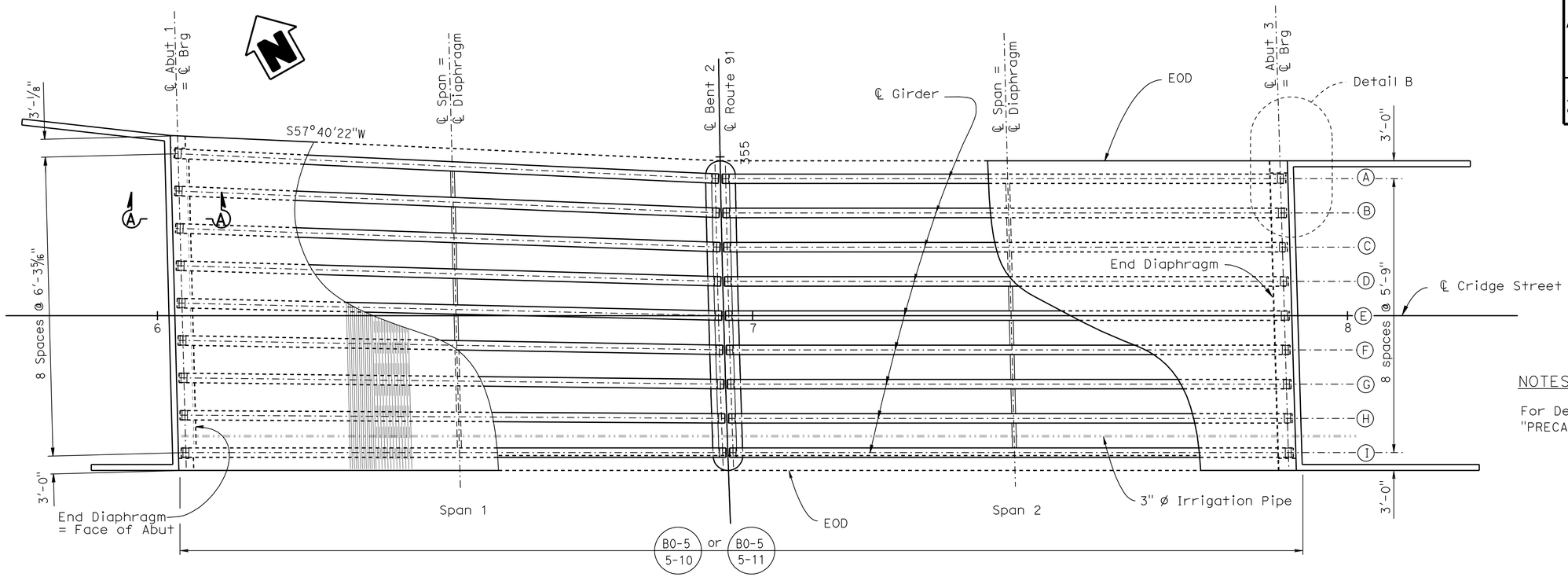

GIRDER LAYOUT

1"=10'

NOTES:

For Details of intermediate diaphragm, see "PRECAST PRESTRESSED I GIRDER (LRFD)" sheet.

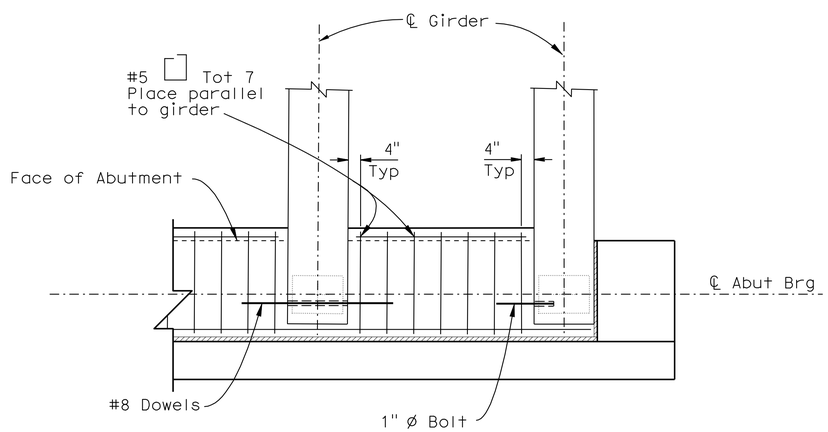

DETAIL B

1/2"=1'-0"

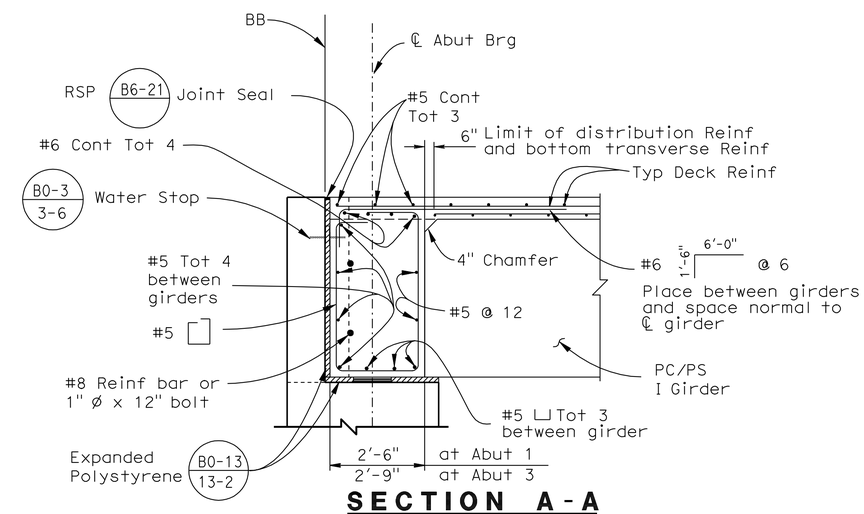

SECTION A-A
END DIAPHRAGM

1/2"=1'-0"

DESIGN	BY M. Vo	CHECKED J. Delgado	
DETAILS	BY D. Wooten/G.Hallstrom	CHECKED J. Delgado	
QUANTITIES	BY A. McPhee	CHECKED J. Szabo	

STATE OF CALIFORNIA DEPARTMENT OF TRANSPORTATION

DIVISION OF ENGINEERING SERVICES STRUCTURE DESIGN DESIGN BRANCH 10

BRIDGE NO. 56-0835
POST MILE 19.62

CRIDGE STREET OC (REPLACE)
GIRDER LAYOUT

STRUCTURES DESIGN DETAIL SHEET (ENGLISH) (REV. 10/25/05)

ORIGINAL SCALE IN INCHES FOR REDUCED PLANS 0 1 2 3

CU 08
EA 448401

DISREGARD PRINTS BEARING EARLIER REVISION DATES

REVISION DATES: 6-19-09 2-18-10 4-29-10 8-19-10 9-27-10

SHEET 16 OF 31

FILE => 560835lg_lo16.dgn

USERNAME => trmmguye DATE PLOTTED => 30-APR-2011 TIME PLOTTED => 13:36