Dist	COUNTY	ROUTE	POST MILES TOTAL PROJECT	SHEET No.	TOTAL SHEETS

REGISTERED CIVIL ENGINEER

May 20, 2011

PLANS APPROVAL DATE

REGISTERED PROFESSIONAL ENGINEER Tilliat Satter No. C42892 Exp. 3-31-12 CIVIL STATE OF CALIFORNIA

THE STATE OF CALIFORNIA OR ITS OFFICERS OR AGENTS SHALL NOT BE RESPONSIBLE FOR THE ACCURACY OR COMPLETENESS OF SCANNED COPIES OF THIS PLAN SHEET.

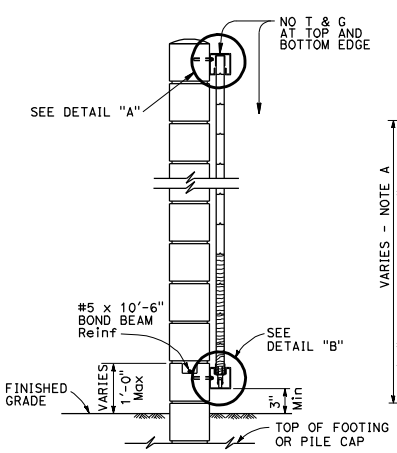

SECTION A-A

NOTE:

Those blocks upon which the supporting steel channels are mounted shall be smooth faced on the mounting side

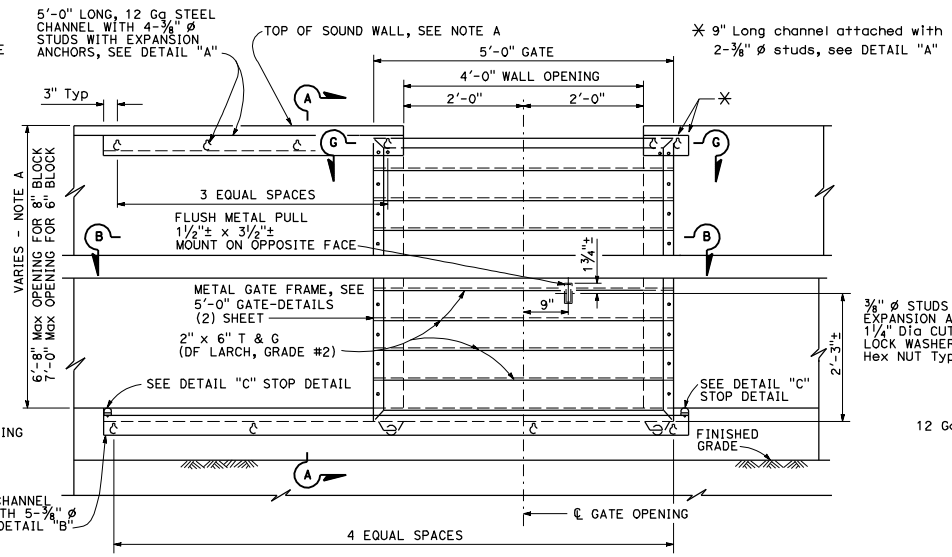

NOTE A:

When sound wall as measured from the bottom of the gate opening exceeds 6'-8" or 7'-0", see 5'-0" GATE DETAILS (2) sheet.

GATE ELEVATION - BACK

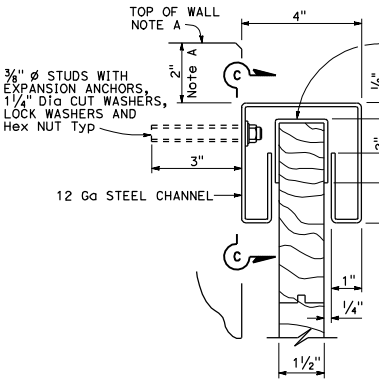

DETAIL "A"

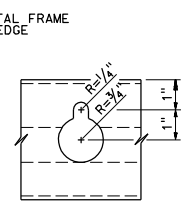

SECTION C-C

CHANNEL MOUNTING HOLE

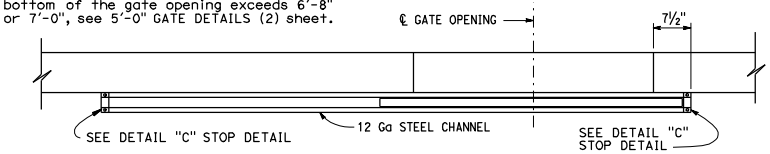

SECTION B-B

NOTES:

Gate mounted on sloping grade shall be oriented to be in closed position when at lower grade point.

Two masonry cells adjacent to each side of gate to be reinforced and grouted.

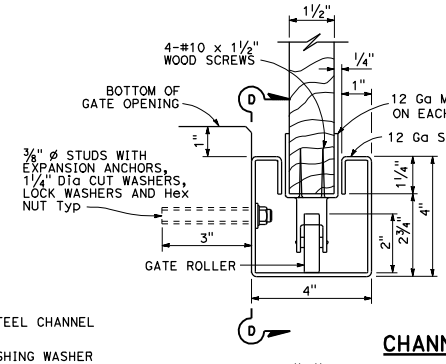

DETAIL "B"

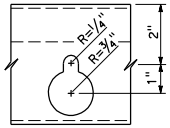

SECTION D-D

CHANNEL MOUNTING HOLE

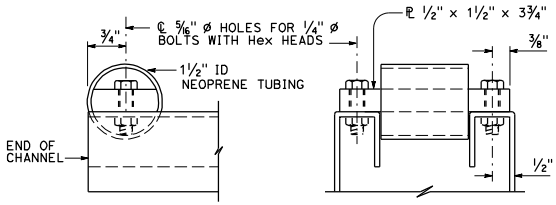

SIDE VIEW

END VIEW

DETAIL "C" STOP DETAIL

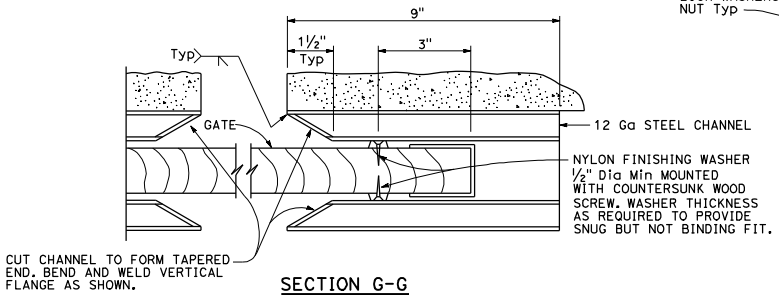

SECTION G-G

For location of nylon finishing washers, see Standard Plan B15-11.

STATE OF CALIFORNIA
DEPARTMENT OF TRANSPORTATION

SOUND WALL MASONRY BLOCK ON FOOTING OR PILE CAP 5'-0" ACCESS GATE DETAIL (1)

NO SCALE

B15-10

6-10-09

2010 STANDARD PLAN B15-10