| Dist | COUNTY | ROUTE | POST MILES TOTAL PROJECT | SHEET No. | TOTAL SHEETS |
|---|---|---|---|---|---|
| | | | | | |

REGISTERED CIVIL ENGINEER

May 20, 2011
PLANS APPROVAL DATE

REGISTERED PROFESSIONAL ENGINEER Dallas Forester No. C37765 Exp. 12-31-12 CIVIL STATE OF CALIFORNIA

*THE STATE OF CALIFORNIA OR ITS OFFICERS OR AGENTS SHALL NOT BE RESPONSIBLE FOR THE ACCURACY OR COMPLETENESS OF SCANNED COPIES OF THIS PLAN SHEET.*

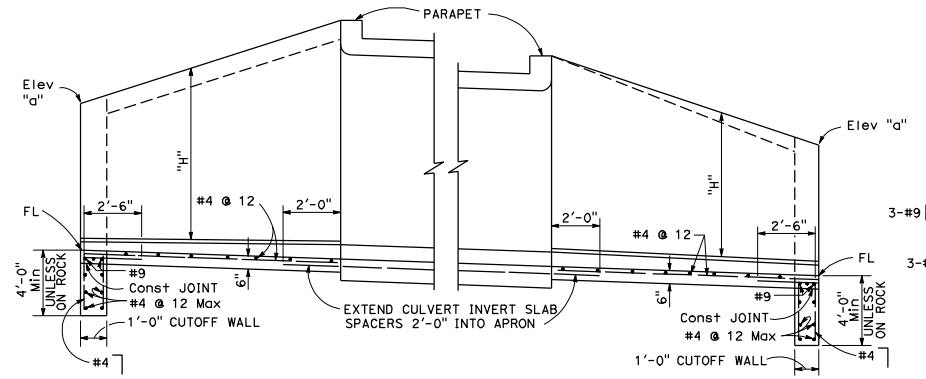


TYPICAL WITH STIFFENING BEAM  TYPICAL WITHOUT STIFFENING BEAM

## PART LONGITUDAL SECTION

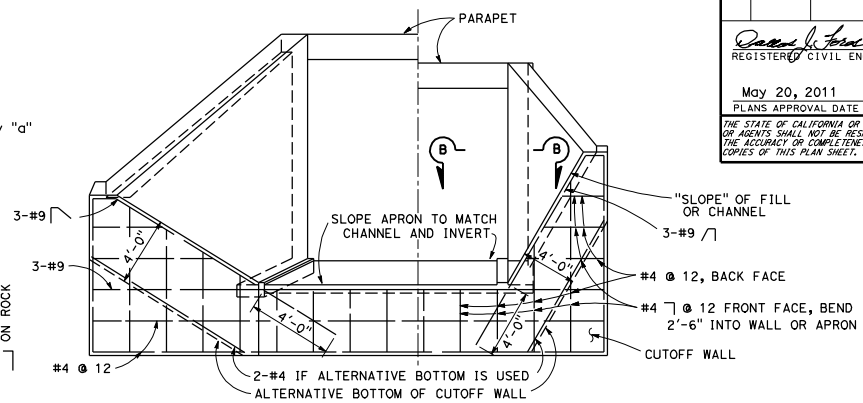


## END ELEVATION

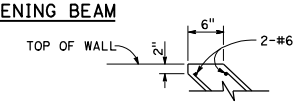


## WITHOUT STIFFENING BEAM

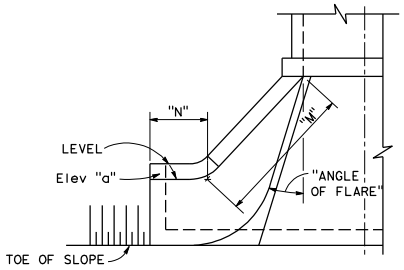


## ALTERNATIVE WARPED WINGWALL

Use where additional protection to toe of embankment is required.

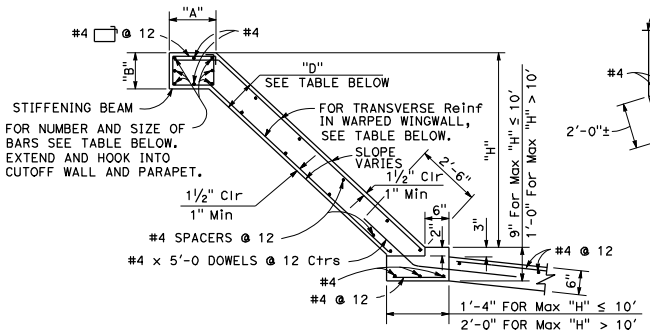


## SECTION C-C

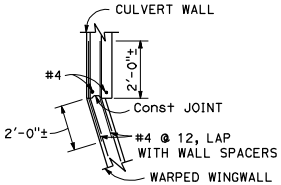


## SECTION B-B

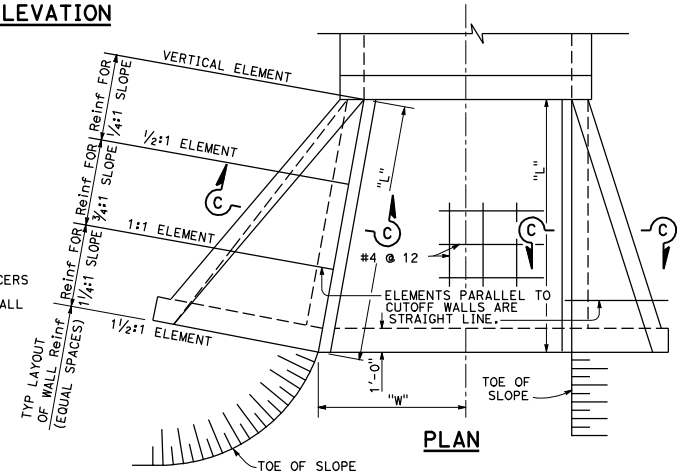


## PLAN

**WARPED WINGWALLS**

**WALL DIMENSIONS AND REINFORCING**

| ELEMENT SLOPE | "H" | 8' OR LESS | 10' | 12' | 14' | 16' | 18' | 20' |
|---|---|---|---|---|---|---|---|---|
| ¼:1 | FRONT FACE Reinf<br>REAR FACE Reinf | #4 @ 12<br>#4 @ 12 | #4 @ 7<br>#4 @ 12 | #5 @ 7<br>#4 @ 12 | #5 @ 5<br>#4 @ 12 | #6 @ 6<br>#4 @ 12 | #7 @ 7<br>#4 @ 12 | #7 @ 6<br>#4 @ 12 |
| ¾:1 | Front face Reinf<br>Rear face Reinf | #4 @ 12<br>#4 @ 12 | #4 @ 12<br>#4 @ 12 | #4 @ 8<br>#4 @ 12 | #4 @ 8<br>#4 @ 10 | #4 @ 8<br>#4 @ 7 | #4 @ 6<br>#4 @ 6 | #4 @ 6<br>#5 @ 8 |
| 1¼:1 | FRONT FACE Reinf<br>REAR FACE Reinf | #4 @ 12<br>#4 @ 8 | #4 @ 12<br>#4 @ 8 | #4 @ 12<br>#4 @ 5 | #4 @ 12<br>#5 @ 6 | #4 @ 12<br>#6 @ 7 | #4 @ 12<br>#6 @ 6 | #4 @ 12<br>#7 @ 6 |
| "D" AT CUTOFF WALL | | 6" | 6" | 6" | 7½" | 8" | 9½" | 11" |
| "D" AT CULVERT | | 6" | 6" | 8" | 9½" | 11" | 1'-1" | |

**STIFFENING BEAM DIMENSIONS AND REINFORCING**

| "H" Max \ "L" Max | 12' | 14' | 16' | 18' | 20' | 25' | 30' | 35' | 40' |
|---|---|---|---|---|---|---|---|---|---|
| 6' | NO BEAM, PLACE 2-#6 IN EACH FACE ALONG TOP OF WALL. | | | | | | | | |
| 8' | | | "A"= 1'-0" | | | | | | |
| 10' | | | "B"= 9" | | | "A"= 1'-6" | | | |
| 12' | | | | | | | | "A"= 1'-10" | |
| 14' | TOTAL 6-#6 | | | "B"= 1'-0" | | | "B"= 1'-3" | | "A"= 2'-2" |
| 16' | | | | | | | | | "B"= 1'-6" |
| 18' | | | TOTAL 6-#7 | | | TOTAL 8-#8 | | | |
| 20' | | | | | | | | TOTAL 8-#9 | |

**NOTES:** Walls designed for 2'-0" surcharge; earth density = 120 pcf; equivalent fluid pressure = 36 pcf.
Vary "D" of warped wall uniformly from that at cutoff wall to that at culvert, for maximum "H" > 12'-0".
Where abrasion is anticipated increase apron thickness to 7" minimum to provide 2" minimum reinforcement coverage.
Dimensions "L", "W", "H", "M", "N", Elevation "a", " Angle of flare", and end "Slope" (as apply) are shown on the plans.

STATE OF CALIFORNIA
DEPARTMENT OF TRANSPORTATION

# BOX CULVERT WARPED WINGWALLS

NO SCALE

**D86A**

**2010 STANDARD PLAN D86A**

9-15-10