Dist	COUNTY	ROUTE	POST MILES TOTAL PROJECT	SHEET No.	TOTAL SHEETS

REGISTERED CIVIL ENGINEER

May 20, 2011

PLANS APPROVAL DATE

REGISTERED PROFESSIONAL ENGINEER Stanley P. Johnson No. C57793 Exp. 3-31-12 CIVIL STATE OF CALIFORNIA

THE STATE OF CALIFORNIA OR ITS OFFICERS OR AGENTS SHALL NOT BE RESPONSIBLE FOR THE ACCURACY OR COMPLETENESS OF SCANNED COPIES OF THIS PLAN SHEET.

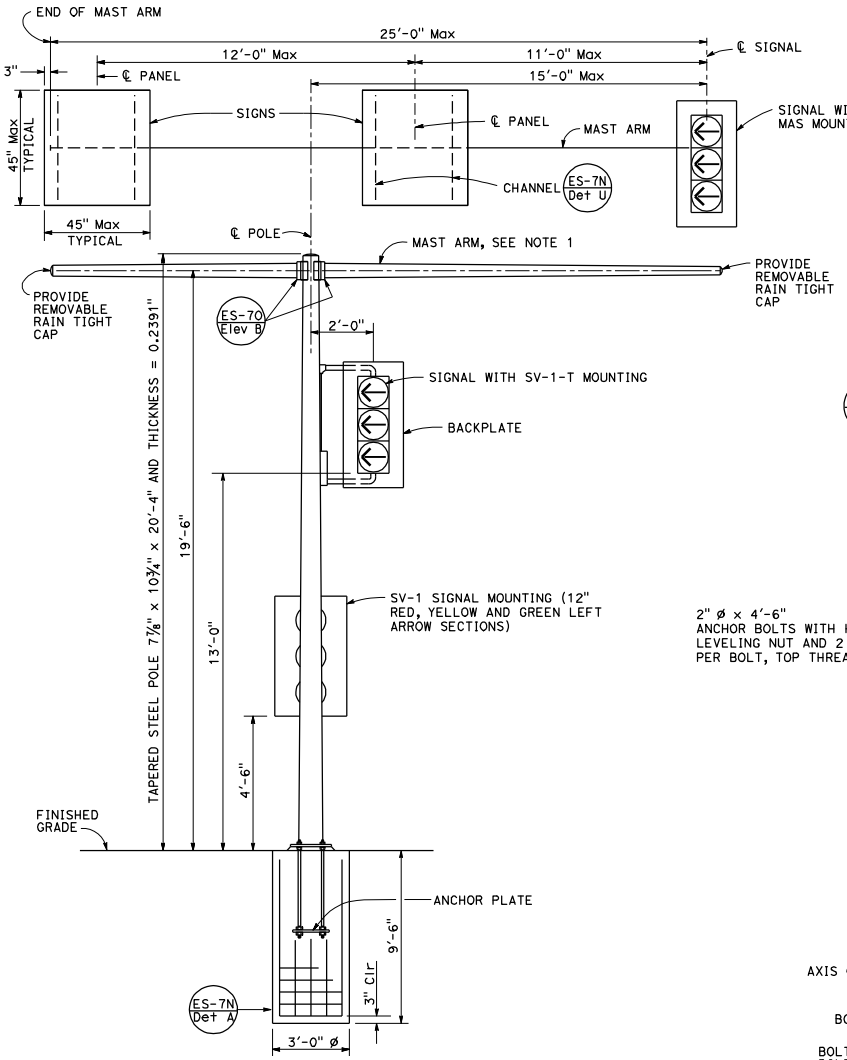

ELEVATION A

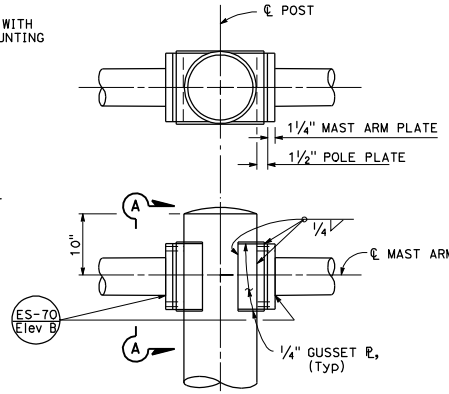

MAST ARM CONNECTION
DETAIL A

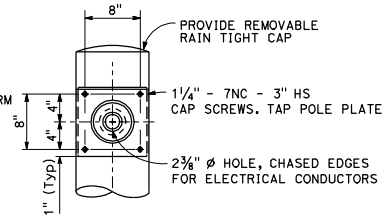

VIEW A-A

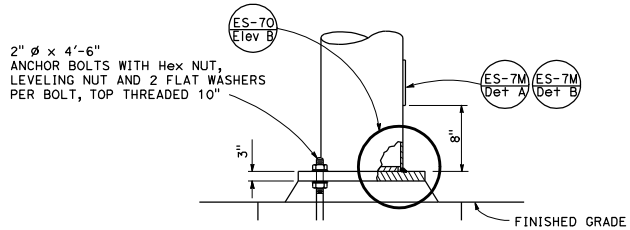

ELEVATION B

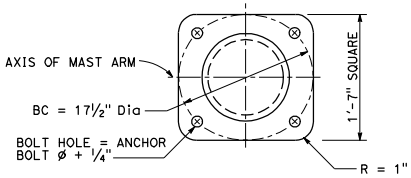

BASE PLATE
DETAIL B

NOTES:

1. Round tapered steel tube thickness 0.1793" with maximum taper of 0.143-inch per foot and 7⅞" OD minimum at pole.
2. Cap screws shall be tightened by the turn-of-nut method, 1/3 turn from snug tight condition. No washer will be required.
3. For mast arm lengths, signs or signals required on each side of ℄ pole, see project plans.
4. Signal mounted on mast arm shall be MAS mounted on pipe tenon, see Detail S on Standard Plan ES-7M.
5. Sign area shall not exceed 14.0 square feet for each sign.
6. If 2 signs are placed on one side of pole, one sign must be placed adjacent to pole.

STATE OF CALIFORNIA
DEPARTMENT OF TRANSPORTATION

ELECTRICAL SYSTEMS (SIGNAL AND SIGN STANDARD, TYPE 33 LEFT TURN)

NO SCALE

ES-7I

2010 STANDARD PLAN ES-7I

8-9-10