© 2016 California Department of Transportation
All Rights Reserved

Dist	COUNTY	ROUTE	POST MILES TOTAL PROJECT	SHEET No.	TOTAL SHEETS

REGISTERED CIVIL ENGINEER

July 15, 2016
PLANS APPROVAL DATE

REGISTERED PROFESSIONAL ENGINEER
Tiliat Satter
No. C42892
Exp. 3-31-18
CIVIL
STATE OF CALIFORNIA

THE STATE OF CALIFORNIA OR ITS OFFICERS OR AGENTS SHALL NOT BE RESPONSIBLE FOR THE ACCURACY OR COMPLETENESS OF SCANNED COPIES OF THIS PLAN SHEET.

TO ACCOMPANY PLANS DATED _____

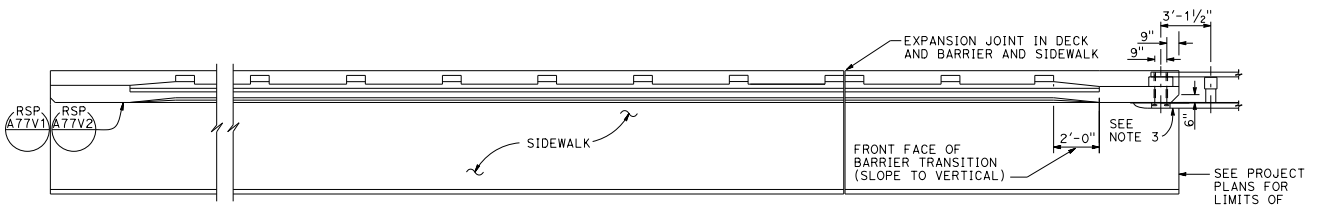

PLAN

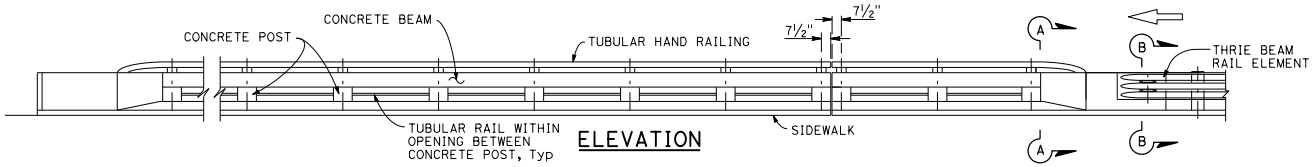

ELEVATION

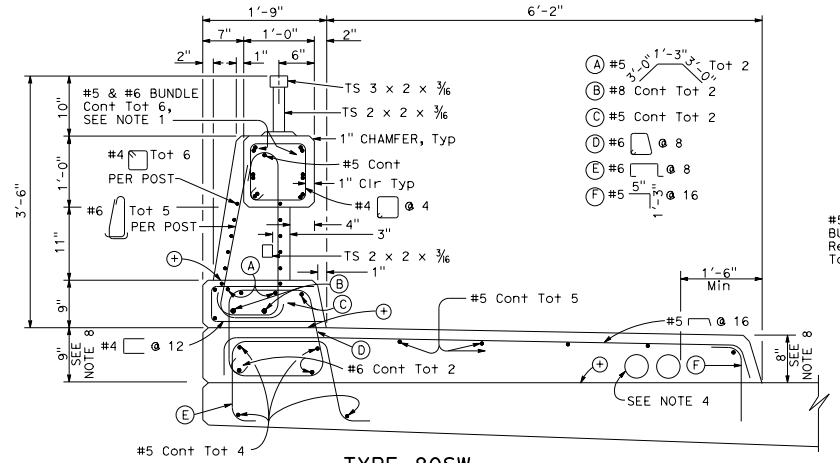

TYPE 80SW

⊕ CONSTRUCTION JOINT

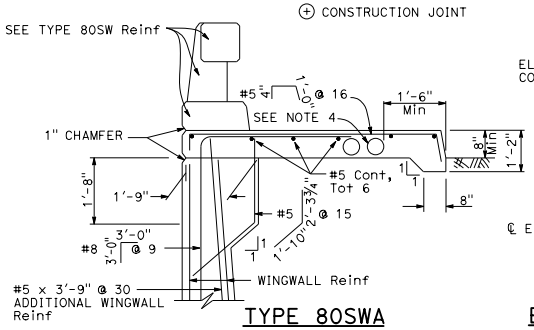

TYPE 80SWA

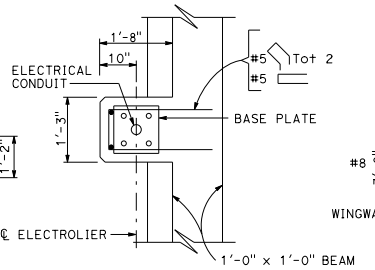

PLAN VIEW

ELECTROLIER PEDESTAL

* BEGIN BARRIER TRANSITION
** END BARRIER TRANSITION

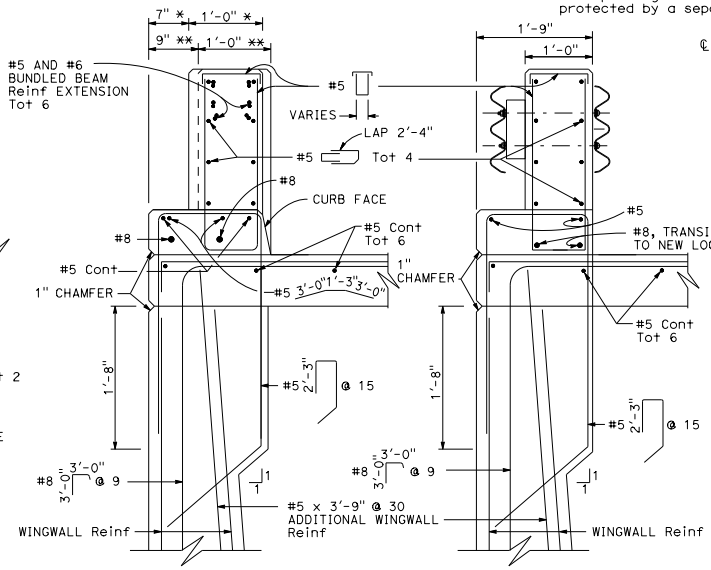

SECTION A-A
(Tubular hand railing not shown)

SECTION B-B

NOTES:

1. No lap splicing allowed on the longitudinal rail reinforcing. Splicing shall be staggered.
2. For electrical details, see Revised Standard Plans RSP ES-9A, RSP ES-9B, RSP ES-9C, RSP ES-9D and RSP ES-9E. See Project Plans for electrical layout.
3. For typical metal railing connection details not shown, see Revised Standard Plans RSP A77V1 and A77V2.
4. A maximum of five - 4" and a minimum of two - 4" round openings for future utilities. Openings are to be sealed at ends and extended 8" minimum past end of sidewalk if not used. Duct forms are to be tied down. Minimum of 6" from face of rail to utility opening. See Standard Plan B14-3 for minimum spacing between conduits and for conduit details at joints.
5. Chain link railing is not allowed on Type 80SW Barrier.
6. Walls are to be backfilled before railing is placed.
7. Terminate all longitudinal curb, sidewalk, and deck reinforcement in standard 90° hooks.
8. Dimensions will vary with cross slope and with certain thickness of surfacing.
9. Expansion joint to match deck joint, see Standard Plan B11-63 for expansion joint details.
10. This barrier is to be used only for speeds of 45 MPH or less. For speeds greater than 45 MPH, pedestrians should be protected by a separation traffic barrier.

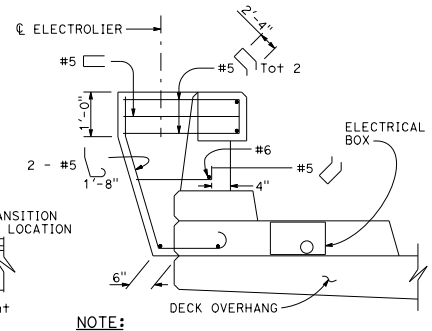

NOTE:
Pedestal design for 1'-0" base plate.

BARRIER MODIFICATION FOR ELECTROLIER

STATE OF CALIFORNIA
DEPARTMENT OF TRANSPORTATION

CONCRETE BARRIER TYPE 80SW (SHEET 1 OF 3)

NO SCALE

RSP B11-62 DATED JULY 15, 2016 SUPERSEDES RSP B11-62 DATED NOVEMBER 15, 2013 AND RSP B11-62 DATED NOVEMBER 15, 2013 AND RSP B11-62 DATED JULY 19, 2013 AND STANDARD PLAN B11-62 DATED MAY 20, 2011 - PAGE 302 OF THE STANDARD PLANS BOOK DATED 2010.

REVISED STANDARD PLAN RSP B11-62

2010 REVISED STANDARD PLAN RSP B11-62

6-29-16