Dist	COUNTY	ROUTE	POST MILES TOTAL PROJECT	SHEET No.	TOTAL SHEETS

REGISTERED CIVIL ENGINEER

May 20, 2011

PLANS APPROVAL DATE

REGISTERED PROFESSIONAL ENGINEER Stanley P. Johnson No. C57793 Exp. 3-31-12 CIVIL STATE OF CALIFORNIA

THE STATE OF CALIFORNIA OR ITS OFFICERS OR AGENTS SHALL NOT BE RESPONSIBLE FOR THE ACCURACY OR COMPLETENESS OF SCANNED COPIES OF THIS PLAN SHEET.

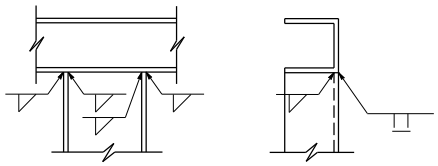

WELD DETAIL No. 3

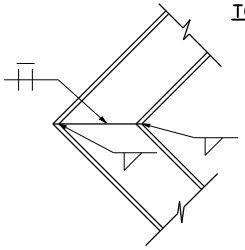

WELD DETAIL No. 4

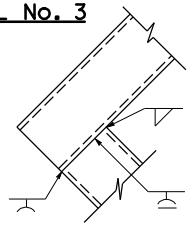

ALTERNATE WELD DETAIL No. 4A

Weld all around outside

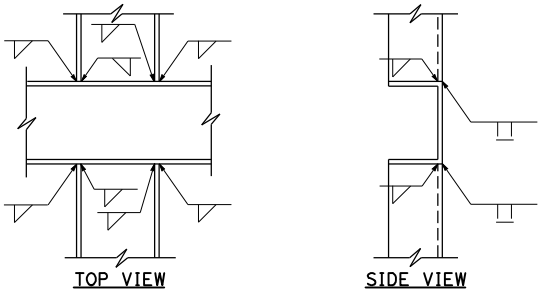

WELD DETAIL No. 5
TYPICAL WELD DETAILS

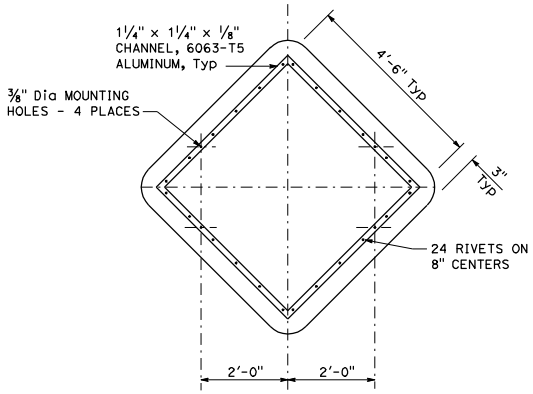

ROADSIDE SIGN DETAIL No. 6

Framing detail for
5'-0" x 5'-0" diamond

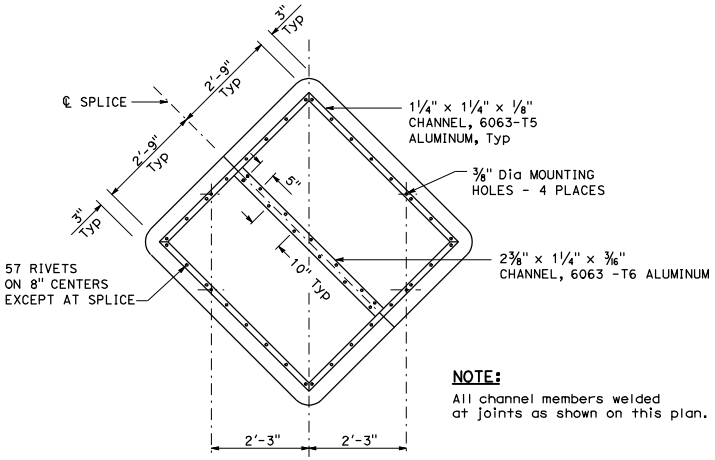

ROADSIDE SIGN DETAIL No. 7

Framing detail for 6'-0" x 6'-0" diamond.
Made from 2 - 3'-0" x 6'-0" panels, spliced
and braced by channels as shown.

NOTE:

All channel members welded
at joints as shown on this plan.

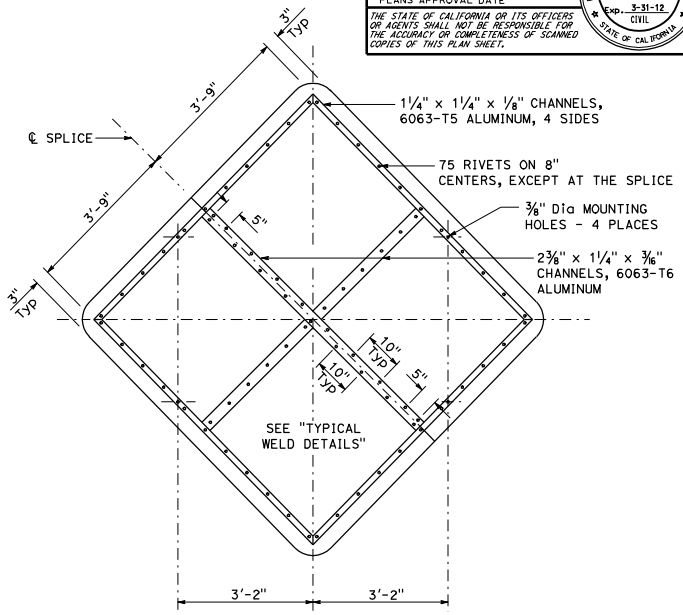

ROADSIDE SIGN DETAIL No. 8

Framing detail for 8'-0" x 8'-0" diamond.
Made from 2 - 4'-0" x 8'-0" panels, spliced
and braced by channels as shown.

CHANNEL SIZES

SIGN SIZE	PANEL THICKNESS	FRAME TYPE
4'-0" x 4'-0"	0.063"	NO FRAME REQUIRED
4'-0" x 4'-0"	0.080"	NO FRAME REQUIRED
5'-0" x 5'-0"	0.080"	SEE ROADSIDE SIGN No. 6
6'-0" x 6'-0"	0.080"	SEE ROADSIDE SIGN No. 7
8'-0" x 8'-0"	0.080"	SEE ROADSIDE SIGN No. 8

STATE OF CALIFORNIA
DEPARTMENT OF TRANSPORTATION

ROADSIDE SINGLE SHEET ALUMINUM SIGNS, DIAMOND SHAPE

NO SCALE

S95

2010 STANDARD PLAN S95

9-30-09